SM-CYCLO®
Speed Reducers and Gearmotors

Note regarding this catalog, March 17, 2003:

The Cyclo 6000 Catalogs are currently being updated.

A new REDUCER catalog is now available in PDF format and can be downloaded from our web site. Therefore, the REDUCER pages have been removed from this earlier "Complete Catalog" document.

A new GEARMOTOR catalog will be available in April 2003.

Please check our web site for the most up to date catalogs and information.

6000 SERIES

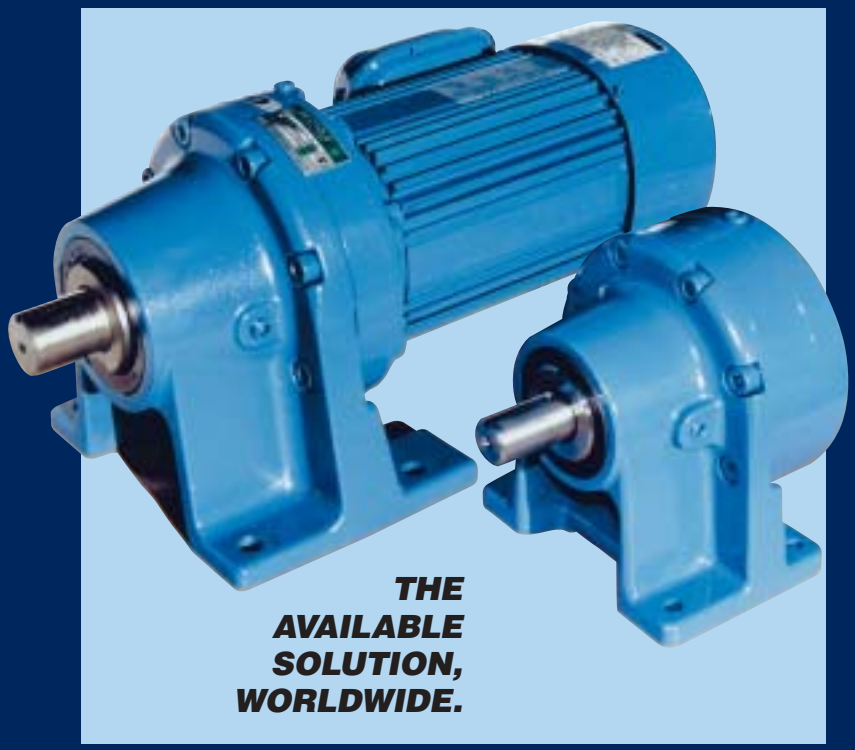

SUMITOMO
MACHINERY CORPORATION OF AMERICA

Catalog
04.601.50.001

A Unique Concept . . .

The word CYCLO . . .
. . . derives from *Kyklos* the Greek word for *circle* and refers to the CYCLO disc, whose outer profile describes a cycloidal curve.

Features & Benefits of the CYCLO concept

• Outstanding Reliability – 2 Year Warranty

CYCLO speed reducers are noted for outstanding reliability and extended operating lifetime – 20 years of problem-free performance is not unusual. This reliability is due in part to the high material specifications, component quality controls and careful assembly procedures. It also results from the *total absence of sliding friction*. Correctly sized and selected CYCLO speed reducers and gearmotors are covered by a two year warranty.

• High Overload Capacity – 500% plus

CYCLO speed reducers have the strength to withstand over-loads that can break the teeth of other reducers.

Here's why:

At least 30% of the CYCLO's unique disc profiles share shock of overload and the components are in *compression* – so they cannot be sheared off.

Compare that to conventional helical gear reducers, where one or two teeth must absorb the entire shock and are more prone to catastrophic failure.

• Overall Economy

Competitive initial cost, high reliability, long life and minimal maintenance give CYCLO speed reducers superior overall economy when compared to conventional gear boxes.

• Ideal for Highly Dynamic Applications

Since inertia is very low, the CYCLO speed reducer is ideally suitable for frequent start-stop-reversing duties and the combination with a frequency inverter.

• High Efficiency – Even at High Ratios

Torque transmitting parts have rolling action with minimal friction, so the overall efficiency is as high as 95% in single reduction units.

• Compact Size

Reduction ratios from 6:1 to 119:1 are available for the single stage. Triple reduction stages offer ratios up to nearly 1,000,000:1.

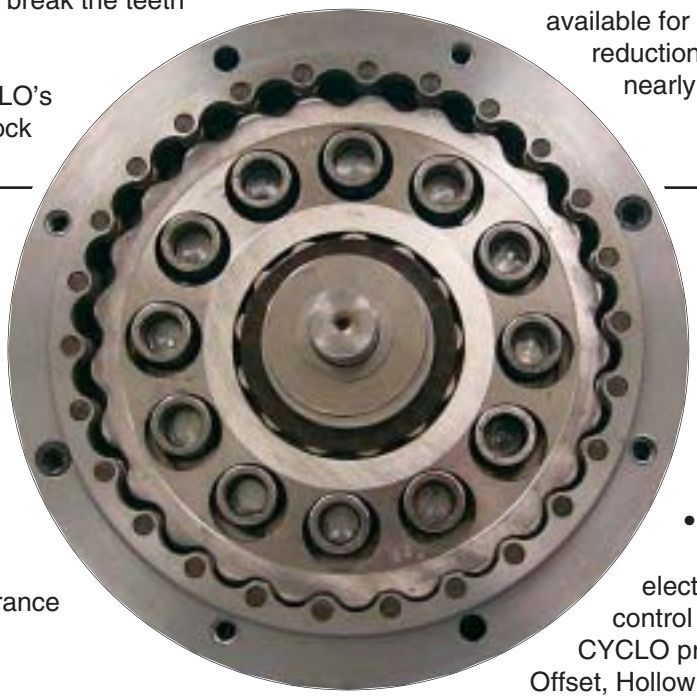

Additional Value

Sumitomo, THE ORIGINAL CYCLO, offers these additional benefits:

• Total Quality

Precision manufacturing and unmatched Quality Assurance insure consistent product performance.

• 70 Years of Product Development

The unique CYCLO operating principle was invented by the German engineer Lorenz Braren in 1931 and his ingenious design has continued its progressive development until the present day.

• Over 7,000,000 Units Sold

CYCLO speed reducers are in daily use in industries throughout the world replacing the more conventional helical, worm and spur gear units.

• Many Options . . .

. . . in mechanical and electrical power transmission and control are offered in the complete CYCLO product range. Right Angle, Offset, Hollow Shaft, and Bushing Mounted variations are readily available.

• Worldwide Product Support

Fast, competent technical assistance with selection, installation and after-sales service is available from production and distribution centers throughout the world.

TABLE OF CONTENTS

Page

INTRODUCTION

Table of Contents 1
Features & Benefits 2-4
Standard Motor & Reducer Combinations 5
Basic Information & Recommendations 6-13

CYCLO GEARMOTORS

Standard Specifications A2
Nomenclature & Mounting Positions A3
Selection A4-A5
Load Classification Tables A6-A9
Selection Tables 60 Hz, 50 Hz A10-A121
Dimension Drawings & Tables A122-A245

CYCLO SPEED REDUCERS

Standard Specifications B-2
Nomenclature & Mounting Positions B-3
Selection B4-B6
Load Factors B7-B8
Selection Tables Single & Double Reduction B9-B63
Dimension Drawings & Tables B64-B151

TORQUE LIMITER

Features & Standard Specifications C2-C6
Selection C7-C79

14V & 17V EXTENDED BASES

Features & Standard Specifications D2-D4
Dimension Drawings & Tables D5-D6

TECHNICAL INFORMATION

Reducer E3-E26
Motor E27-E42
Standards E43-E48
General Engineering Information E49-E54

Introducing The Improved

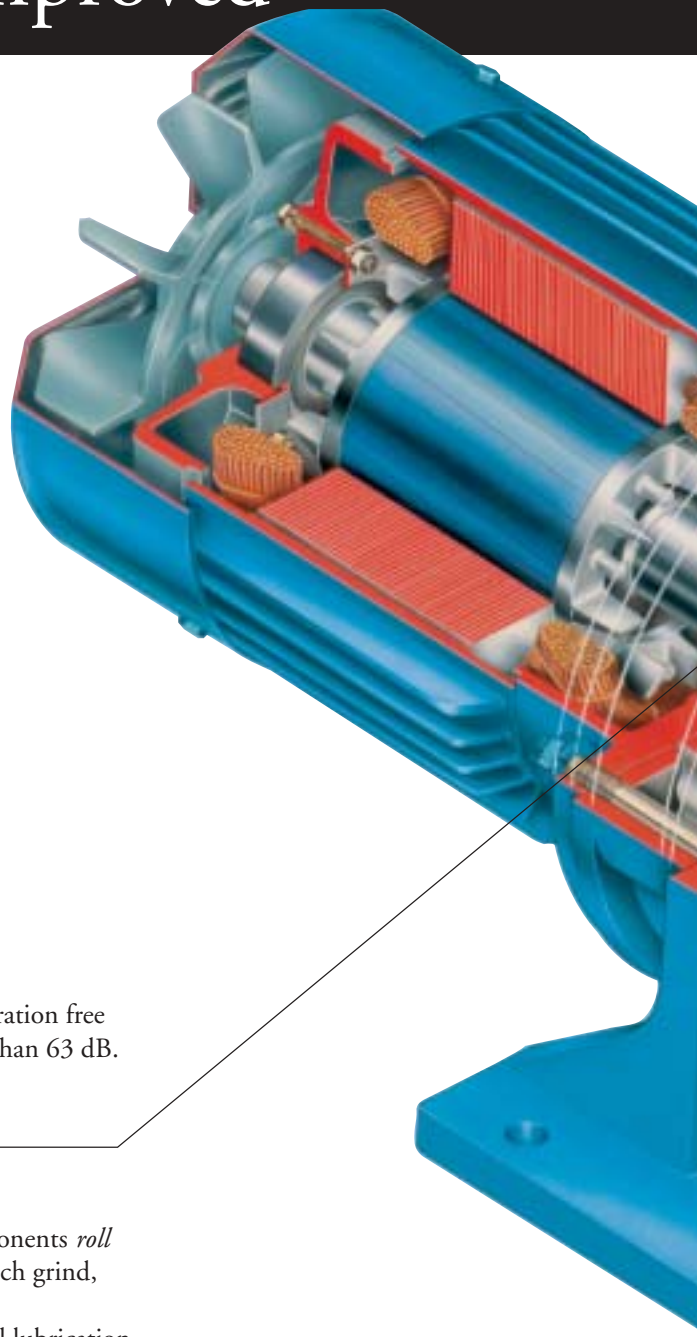

Sleek, Clean Design
Low Cost, High Efficiency

Motor power to output shaft efficiency of up to 98% and high torque capacity keep product costs to a minimum.

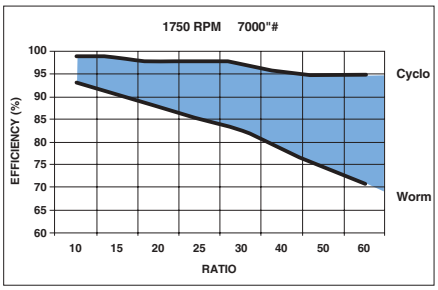

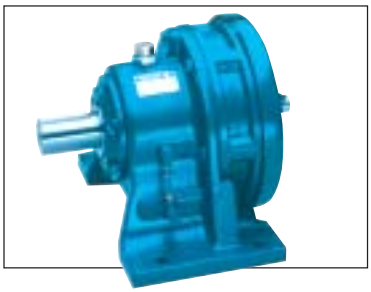

Versatile

- Horizontal, vertical and universal mounted models
- Footed and flange styles
- Reducers, "C" Face units and gearmotor variants

Smooth, Quiet Operation

All parts of the speed reducer are placed in symmetry around the shafts for perfectly balanced, smooth, vibration free and quiet operation, often less than 63 dB.

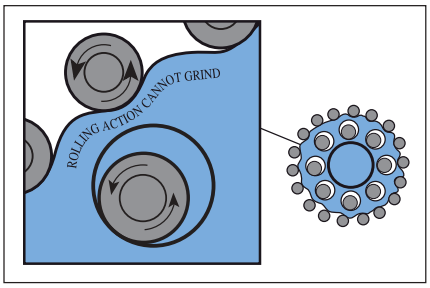

Reliable

- All torque transmitting components *roll* unlike conventional gears which grind, wear and can break.
- Oil sight gauge. Simple, visual lubrication indication.
- Positive lubrication delivered by a shaft driven pump on vertical oil lubricated units.
- Integrated gearmotor option with no motor connection to wear out or break.

Manufactured in the U.S.A.

Reduced Backlash

Decreased internal clearances for high performance requirements.

6000 Series Cyclo

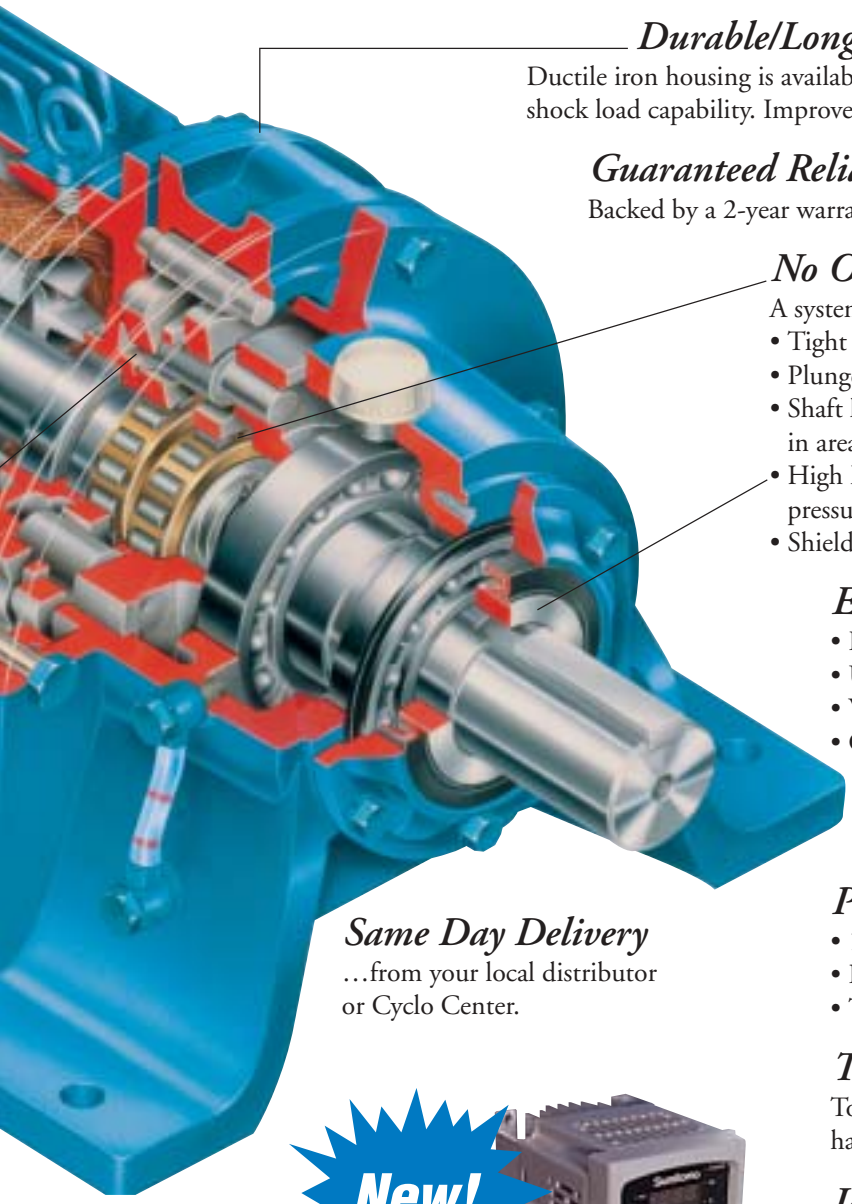

500% Shock Load Capacity
No need to oversize. No possibility of catastrophic failure.

Durable/Longer Life
Ductile iron housing is available for frequent reversing applications and higher shock load capability. Improved gear geometry extends already long life.

Guaranteed Reliability
Backed by a 2-year warranty – unlimited by hours of use.

No Oil – No Problems
A system to end oil leakage problems:
- Tight shaft tolerances & concentricity
- Plunge ground wear sleeve
- Shaft hardness & smoothness in area of the seal
- High Efficiency, low internal pressure, spring loaded seals
- Shielded low speed shaft bearing

Known world-wide for leak-proof design

Easily Modifiable
- FDA approved coating
- USDA approved lubricant
- Washdown
- Chemical processing duty

Compact
20% smaller than helical gearboxes.

Plenty of Ratings
- 1/8 to 100 HP
- Ratios from 6:1 to 658,000:1
- Torques to 521,000 in. lbs.

Total Dependability
Torque transmitting parts are made from fully hardened, vacuum degassed bearing grade steel.

Same Day Delivery
…from your local distributor or Cyclo Center.

Ideal for Adjustable Speed Applications
6000 Series CYCLO Gearmotors are available with our new full-function, easy-to-use SF-320 V/F Microdrive.

SUMITOMO
MACHINERY CORPORATION OF AMERICA

…Fewer Parts & Advanced Design Make the Difference!

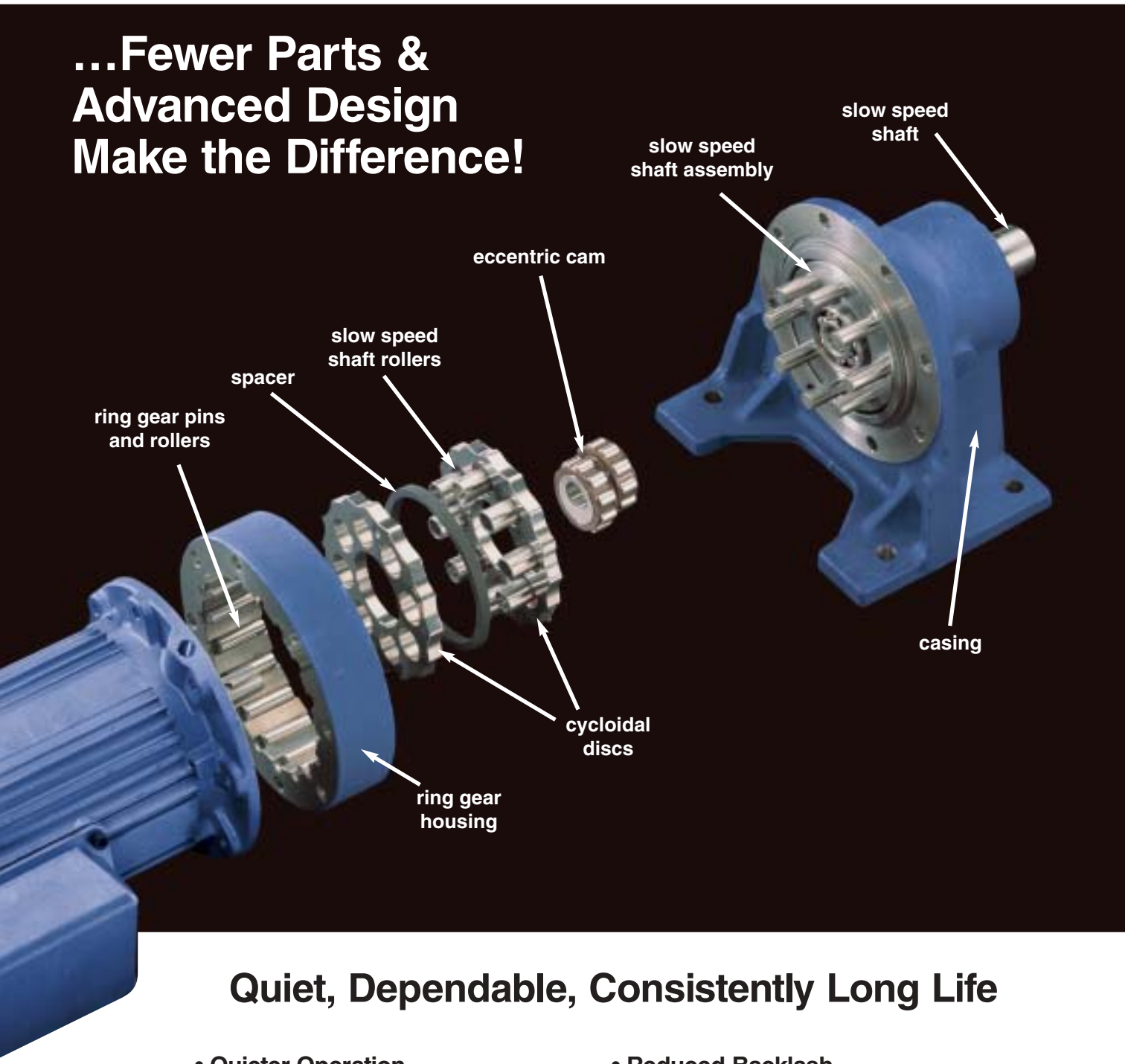

Quiet, Dependable, Consistently Long Life

• Quieter Operation
Super finishing of rotating components provides smoother rolling action

• Higher Ratings
Optimized design imparts more uniform internal load distribution

• Longer Life
Improved internal gearometry extends already long life

• Reduced Backlash
Decreased internal clearances for high performance requirements

• Total Dependability
Torque transmitting parts are made from fully hardened, vacuum degassed bearing grade steel

• Absolute Consistency
Stringent manufacturing process and assembly controls assure reliability

STANDARD MOTOR AND REDUCER COMBINATIONS

Combinations with 1750 RPM motor

Ratio 6~119

Ratio		6	8	11	13	15	17	21	25	29	35	43	51	59	71	87	119
O/p Speed r/min	50Hz	242	181	132	112	96.7	85.3	69.0	58.0	50.0	41.4	33.7	28.4	24.6	20.4	16.7	12.2
	60Hz	292	219	159	135	117	103	83.3	70.0	60.3	50.0	40.7	34.3	29.7	24.6	20.1	14.7
MOTOR HP (kW)	1/8 (0.1)	●	●	●	●	●	●	●	●	●	●	●	●	●	●	●	●
	1/4 (0.2)	●	●	●	●	●	●	●	●	●	●	●	●	●	●	●	●
	1/3 (0.25)	●	●	●	●	●	●	●	●	●	●	●	●	●	●	●	●
	1/2 (0.4)	●	●	●	●	●	●	●	●	●	●	●	●	●	●	●	
	3/4 (0.55)	●	●	●	●	●	●	●	●	●	●	●	●	●	●	●	
	1 (0.75)	●	●	●	●	●	●	●	●	●	●	●	●	●	●	●	
	1.5 (1.1)	●	●	●	●	●	●	●	●	●	●	●	●	●	●	●	
	2 (1.5)	●	●	●	●	●	●	●	●	●	●	●	●	●	●	●	
	3 (2.2)	●	●	●	●	●	●	●	●	●	●	●	●	●	●	●	
	5 (3.7)	●	●	●	●	●	●	●	●	●	●	●	●	●	●	●	
	7.5 (5.5)	●	●	●	●	●	●	●	●	●	●	●	●	●	●	●	
	10 (7.5)	●	●	●	●	●	●	●	●	●	●	●	●	●	●	●	
	15 (11)	●	●	●	●	●	●	●	●	●	●	●	●	●	●	●	
	20 (15)	●	●	●	●	●	●	●	●	●	●	●	●	●	●	●	
	25 (18.5)	●	●	●	●	●	●	●	●	●	●	●	●	●	●	●	
	30 (22)	●	●	●	●	●	●	●	●	●	●	●	●	●			
	40 (30)	●	●	●	●	●	●	●	●	●	●	●	●	●			
	50 (37)			●	●	●	●	●	●	●	●	●		●			
	60 (45)			●	●	●	●	●	●	●		●					
	75 (55)			●		●		●		●		●					
	100 (75)			●		●		●		●							

Combinations with 1165 RPM motor

Ratio 11~87

Ratio		11	15	21	29	43	59	87
O/p Speed r/min	50Hz	89.1	65.3	46.7	33.8	22.8	16.6	11.3
	60Hz	106	77.7	55.5	40.2	27.1	19.7	13.4
MOTOR HP (kW)	20 (15)						●	●
	25 (18.5)					●	●	●
	30 (22)					●	●	●
	40 (30)			●	●	●	●	●
	50 (37)		●	●	●	●	●	●
	60 (45)		●	●	●	●	●	●
	75 (55)	●	●	●	●	●	●	
	100 (75)	●	●	●	●	●	●	
	125 (90)	●	●	●	●	●		
	150 (110)	●	●	●	●	●		
	175 (132)	●	●	●	●			

New combinations are marked by ● color.

Combinations with 1750 RPM motor

Ratio 104~7569

Ratio		104	121	143	165	195	231	273	319	377	473	559	649	731	841	1003	1247	1479	1849	2065	2537	3045	3481	4437	5133	6177	7569
Output Speed r/min	50Hz	13.9	12.0	10.1	8.79	7.44	6.28	5.31	4.55	3.85	3.07	2.59	2.23	1.98	1.72	1.45	1.16	0.980	0.784	0.702	0.572	0.476	0.417	0.327	0.282	0.235	0.192
	60Hz	16.8	14.5	12.2	10.6	8.97	7.58	6.41	5.49	4.64	3.70	3.13	2.70	2.39	2.08	1.74	1.40	1.18	0.946	0.847	0.690	0.575	0.503	0.394	0.341	0.283	0.231
MOTOR HP (kW)	1/8 (0.1)	●	●	●	●	●	●	●	●	●	●	●	●	●	●	●	●	●	●	●	●	●	●	●	●	●	●
	1/4 (0.2)	●	●	●	●	●	●	●	●	●	●	●	●	●	●	●	●	●	●	●	●	●	●	●	●	●	●
	1/3 (0.25)	●	●	●	●	●	●	●	●	●	●	●	●	●	●	●	●	●	●	●	●	●					
	1/2 (0.4)	●	●	●	●	●	●	●	●	●	●	●	●	●	●	●	●	●	●	●	●	●	●	●	●	●	●
	3/4 (0.55)	●	●	●	●	●	●	●	●	●	●	●	●	●	●	●	●	●	●								
	1 (0.75)	●	●	●	●	●	●	●	●	●	●	●	●	●	●	●	●	●	●	●	●	●	●	●	●	●	●
	1.5 (1.1)	●	●	●	●	●	●	●	●	●	●	●	●	●	●	●	●	●	●	●							
	2 (1.5)	●	●	●	●	●	●	●	●	●	●	●	●	●	●	●	●	●	●	●	●	●	●	●	●	●	●
	3 (2.2)	●	●	●	●	●	●	●	●	●	●	●	●	●	●	●	●	●	●	●	●	●	●	●	●	●	●
	5 (3.7)	●	●	●	●	●	●	●	●	●	●	●	●	●	●	●	●	●	●	●	●	●	●	●	●	●	●
	7.5 (5.5)	●	●	●	●	●	●	●	●	●	●	●	●	●	●	●	●	●	●	●	●	●	●	●	●	●	●
	10 (7.5)	●	●	●	●	●	●	●	●	●	●	●	●	●	●	●	●	●	●	●							
	15 (11)	●	●	●	●	●	●	●	●	●	●	●	●	●	●	●	●	●									
	20 (15)	●	●		●	●	●	●	●	●	●	●	●	●	●	●											
	25 (18.5)		●		●	●	●	●	●	●	●	●	●	●	●												
	30 (22)		●		●	●	●	●	●	●	●	●	●														
	40 (30)		●		●	●	●	●	●	●	●																
	50 (37)		●		●	●	●		●	●																	
	60 (45)		●		●	●			●																		
Output Torque N・m		24 ~ 7350	24 ~ 31300	24 ~ 7630	24 ~ 43700		24 ~ 46000		24 ~ 68200				45 ~ 68200	24 ~ 68200		45 ~ 68200	24 ~ 68200	150 ~ 68200	24 ~ 68200	45 ~ 68200			150 ~ 68200			525 ~ 68200	

New combinations are marked by ● color.

BASIC INFORMATION & RECOMMENDATIONS

Drive Ratings

Standard SM-CYCLO® speed reducers are designed and built for long, maintenance-free, 10-hour daily service under conditions of uniform load. When your application involves more severe conditions, catalog ratings must be divided by the proper service factor, or the actual load must be multiplied by this factor.

Shaft Rotation

For single and triple reduction units, the slow speed shaft turns in the direction opposite to that of the high speed shaft. For double reduction units, the slow speed and high speed shafts turn in the same direction. The slow and high speed shafts are coaxial for all reductions.

Shaft Connections

A pulley, sprocket or pinion should be mounted as close to the shaft bearing as possible and ideally, in order to avoid undue bearing load and shaft deflection, not with the point of radial load beyond the midpoint of the protruding shaft. Never overtighten belts or chains. Careful and accurate installation is essential for efficient and trouble-free operation. Before installing, the shafts should be checked to make sure that they are parallel and level. Accuracy of alignment after mounting can be checked with a string or straight edge held against the faces of the sprocket or pulley hubs.

Couplings should be properly aligned according to the limits specified by the manufacturer and checked carefully prior to initial startup. In order for it to give the required fit, the coupling bore diameter and tolerance should be appropriate for the gearbox shaft diameter and tolerance.

Control of Shaft Load

When power is transmitted through spur gear, belts, pulleys, or chains, radial forces are applied to the shafts. The radial capacities are calculated from load centering and compared to the allowable radial load.

Installation

Be sure to install and operate SM-CYCLO® drives in compliance with applicable local and national safety codes. Appropriate guards for rotating shafts should be used.

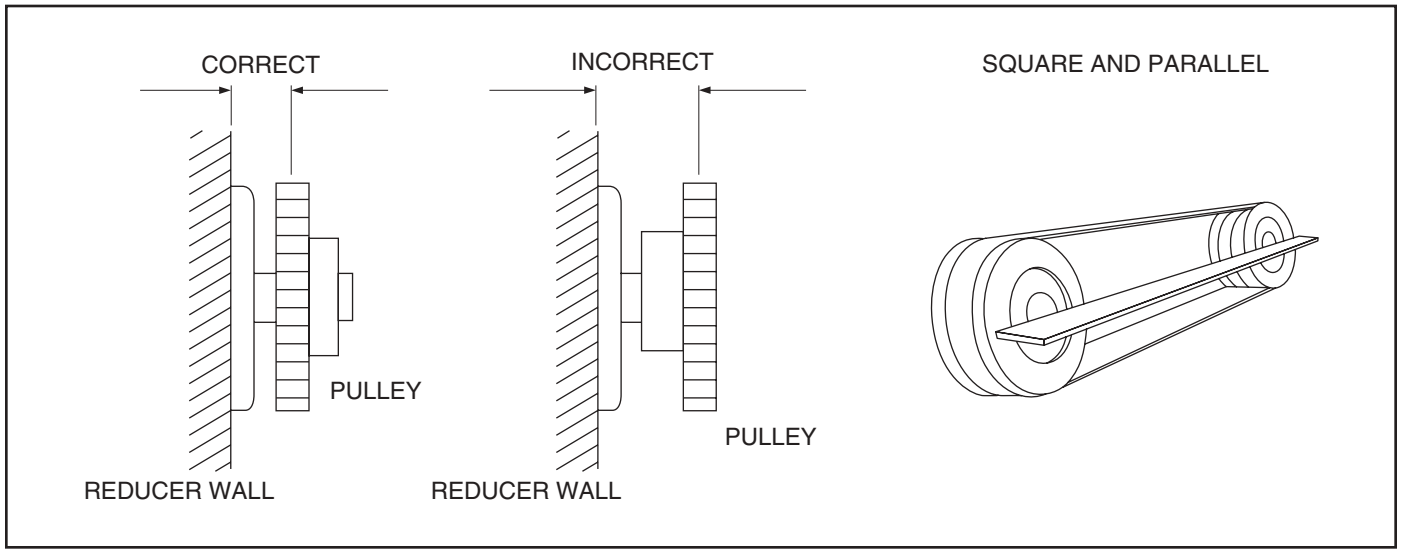

Mounting Considerations

Horizontal and vertical oil-lubricated units should be mounted on level planes whenever possible. When they are mounted on inclined surfaces, minor modifications are necessary because inclined mounting could lower the oil level. However, overfilling the unit with oil may cause leakage through the air vent, foaming, churning and consequently overheating. Please contact the factory.

Lubrication Information

The smaller SM-CYCLO® units up to size 6125 and some multiple reduction units are grease lubricated. All other units are oil lubricated as standard.

Grease Lubrication

All grease lubricated units are filled with grease at our factory and arrive ready for use.

A. Lifetime Grease Lubrication

SM-CYCLO® units up to size 6125 are grease lubricated for life and suitable for any mounting position. These sizes are filled with SHELL ALVANIA #2 grease at our factory and are maintenance-free for 20,000 operating hours or 4 to 5 years.

B. Other Grease Lubrication

Grease lubricated units larger than size 6125 are usually filled with SHELL ALVANIA #2 grease at our factory. These units are equiped with grease nipples and vent plugs to allow for periodic regreasing.

Oil Lubricated Units

Oil lubricated units must be filled to the correct level with oil before operating. Choose an appropriate oil viscosity that suits the installation ambient temperature. For recommended oil types and viscosity grades, please refer to our current Operating and Maintenance Manual.

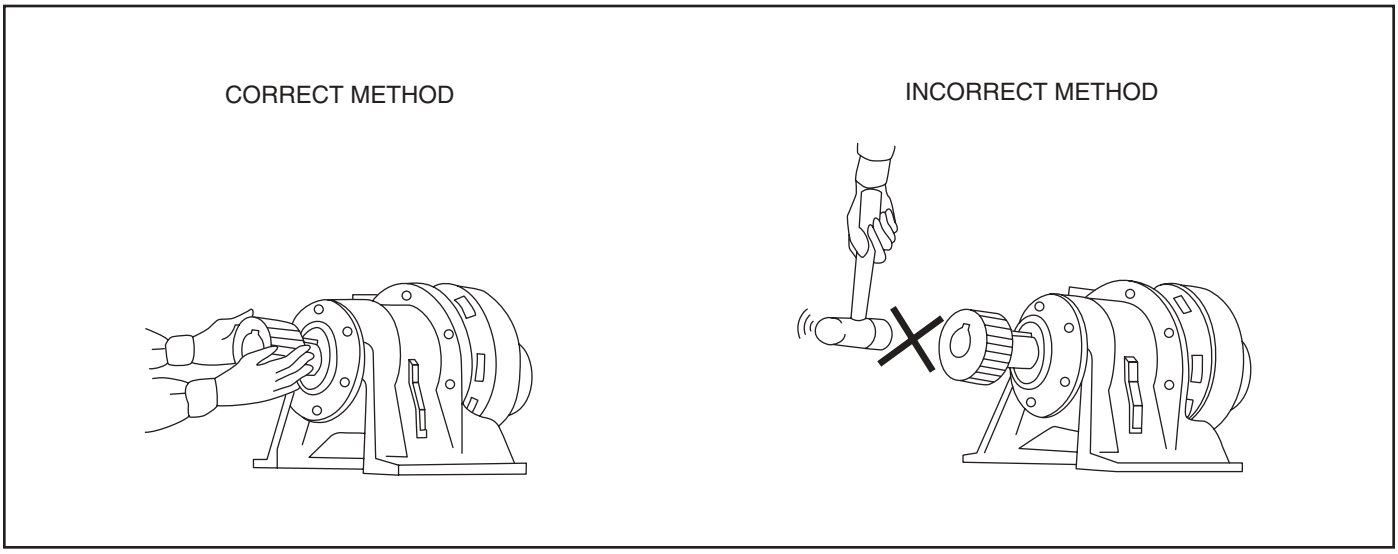

HOW IT WORKS

The unique SM-CYCLO® speed reducing system is based on an ingeniously simple principle that offers many benefits to the designer and user of power transmission drives. Basically, the speed reducer has only three major moving parts:

1. **High speed input shaft with integrally mounted eccentric cam and roller bearing assembly**
2. **Cycloid discs**
3. **Slow speed shaft assembly**

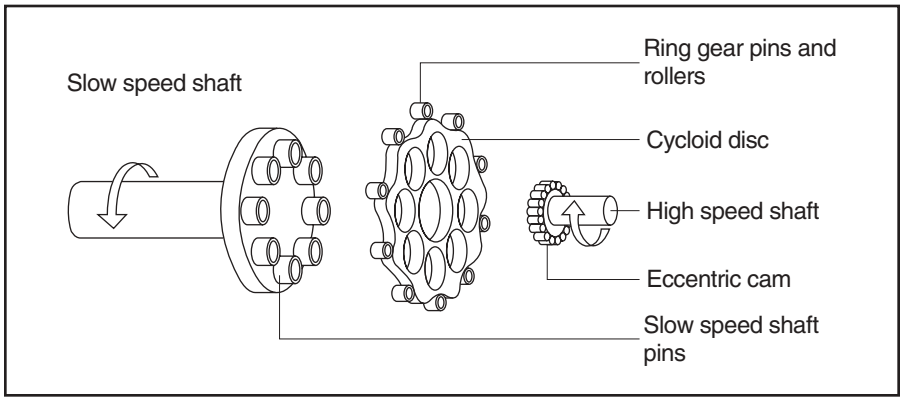

As the eccentric cam rotates, it rolls the cycloid discs around the internal circumference of the stationary ring gear.

The resulting action is similar to that of a wheel rolling around the inside of a ring. As the wheel (cycloid disc) travels in a clockwise path around the ring (ring gear housing), the wheel itself turns slowly on its own axis in a counter-clockwise direction. In the SM-CYCLO® system the cycloidal profile around the outer edge of the disc engages progressively with the rollers of the fixed ring gear housing to produce a reverse rotation at reduced speed. For each complete revolution of the high speed shaft, the cycloid disc turns one cycloidal tooth in the opposite direction. In general, there is one less cycloidal tooth around the disc than there are pins in the fixed ring gear housing, which results in reduction ratios equal to the number of cycloidal teeth on the disc. (Note: For some ratios, there are two less teeth per cycloid disc than there are pins in the ring gear housing.)

The reduced rotation of the cycloid discs is transmitted to the slow speed shaft by means of drive pins and rollers that engage with holes located around the middle of each disc.

Typically, a two disc system is used with a double eccentric cam which increases the torque capacity and offers an exceptionally smooth, vibration-free drive.

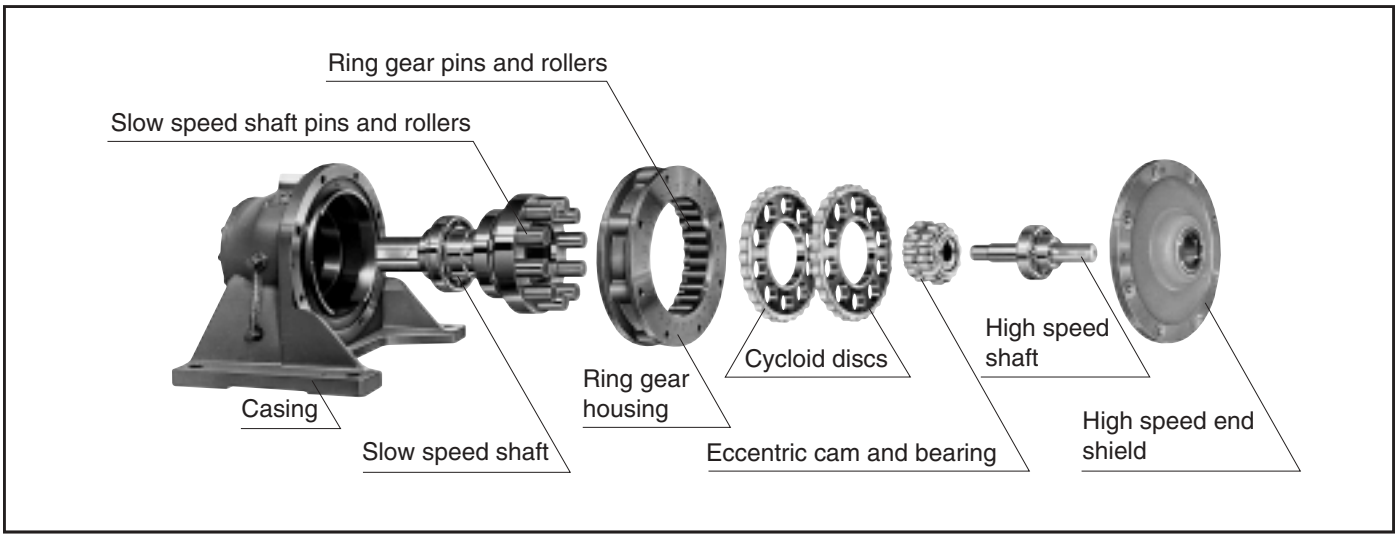

BASIC MOTOR SPECIFICATIONS

Table 1 3-Phase Induction Motors

● : Standard Insulation
○ : Manufactured Models

Capacity \ Specification			Indoor Type		Outdoor Type		Corrosion Proof Class 2		Insulation Class						Two Speed Motors (Constant Torque)	Inverter Motors (Constant Torque)			
									B		F		H			Indoor Type		Outdoor Type	
HP	(kW)	P	4	6	4	6	4	6	4	6	4	6	4	6	4/8	4	6	4	6
1/8	(0.1)		○		○		○		●		○		○			○		○	
1/4	(0.2)		○		○		○		●		○		○			○		○	
1/3	(0.25)		○		○		○		●		○		○			○		○	
1/2	(0.4)		○	○	○	○	○	○	●	○	○	○	○	○	○	○		○	
3/4	(0.55)		○		○		○		●		○		○			○		○	
1	(0.75)		○	○	○	○	○	○	●	○	○	○	○	○	○	○	○	○	○
1½	(1.1)		○		○		○		●		○		○			○		○	
2	(1.5)		○	○	○	○	○	○	●	○	○	○	○	○	○	○	○	○	○
3	(2.2)		○	○	○	○	○	○	●	○	○	○	○	○	○	○	○	○	○
5	(3.7)		○	○	○	○	○	○	●	○	○	○	○	○	○	○	○	○	○
7½	(5.5)		○	○	○	○	○	○	●	○	○	○	○	○	○	○	○	○	○
10	(7.5)		○	○	○	○	○	○	●	○	○	○	○	○	○	○	○	○	○
15	(11)		○	○	○	○	○	○	●	○	○	○	○	○	○	○	○	○	○
20	(15)		○	○	○	○	○	○	●	●	○	○	○	○	○	○	○	○	○
25	(18.5)		○	○	○	○	○	○	●		○	●	○	○	○	○	○	○	○
30	(22)		○	○	○	○	○	○	●		○	●	○	○	○	○	○	○	○
40	(30)		○	○	○	○	○	○			●	●	○	○	○	○	○	○	○
50	(37)		○	○	○	○	○	○			●	●	○	○		○	○	○	○
60	(45)		○	○	○	○	○	○			●	●	○	○		○	○	○	○
75	(55)		○	○	○	○	○	○			●	●	○	○		○	○	○	○
Remarks			Continuous Rating & Applicable Voltage: 75 HP (55kW) and under 230/460V 60Hz, consult factory for 575V. Provided that the base frequency for driving an inverter is 60Hz.																

Table 2 3-Phase Induction Motors with Built-in Brakes

● : Standard Insulation
○ : Manufactured Models

Capacity \ Specification			Indoor Type		Outdoor Type		Corrosion Proof Class 2		Insulation Class						Two Speed Motors (Constant Torque)	Inverter Motors (Constant Torque)			
									B		F		H			Indoor Type		Outdoor Type	
HP	(kW)	P	4	6	4	6	4	6	4	6	4	6	4	6	4/8	4	6	4	6
1/8	(0.1)		○		○		○		●		○		○			○		○	
1/4	(0.2)		○		○		○		●		○		○			○		○	
1/3	(0.25)		○		○		○		●		○		○			○		○	
1/2	(0.4)		○	○	○	○	○	○	●	○	○	○	○	○	○	○		○	
3/4	(0.55)		○		○		○		●		○		○			○		○	
1	(0.75)		○	○	○	○	○	○	●	○	○	○	○	○	○	○	○	○	○
1½	(1.1)		○		○		○		●		○		○			○		○	
2	(1.5)		○	○	○	○	○	○	●	○	○	○	○	○	○	○	○	○	○
3	(2.2)		○	○	○	○	○	○	●	○	○	○	○	○	○	○	○	○	○
5	(3.7)		○	○	○	○	○	○	●	○	○	○	○	○	○	○	○	○	○
7½	(5.5)		○	○	○	○	○	○	●	○	○	○	○	○	○	○	○	○	○
10	(7.5)		○	○	○	○	○	○	●	○	○	○	○	○	○	○	○	○	○
15	(11)		○	○	○	○	○	○	●	○	○	○	○	○	○	○	○	○	○
20	(15)		○	○	○	○	○	○	●	●	○	○	○	○	○	○	○	○	○
25	(18.5)		○	○	○	○	○	○	●		○	●	○	○	○	○	○	○	○
30	(22)		○	○	○	○	○	○	●		○	●	○	○	○	○	○	○	○
40	(30)		○	○	○	○	○	○			●	●	○	○	○	○	○	○	○
50	(37)		○	○	○	○	○	○			●	●	○	○					
Remarks			Continuous Rating & Applicable Voltage: 230/460V 60Hz, consult factory for 575V. Brake Insulation: B type Provided that the base frequency for driving an inverter is 60Hz.																

Notes: 1. Motors with output HP (kW) specifications other than as listed in Tables 1~4 are also manufactured. Consult factory.
Examples: Special voltage, dust-proof, humidity proof, tropical treatment high temperature, ship use, dual shaft (round & square shaft), CSA Standard, NEMA Standard, etc. For other corresponding Standards, refer to Comparison of Sumitomo Standards with International Standards in the Technical Information Section.
2. Using an inverter drive, start-up lubrication properties and thermal rating must be reviewed for proper Cyclo reducer selection. Advise us of ambient temperature, input RPM, mounting method, load characteristics and other conditions of use.
3. When the standard electric motor is driven by an inverter, the dielectric withstand voltage of the electric motor may have to be taken into account if the inverter has a high carrier frequency (typical in IGBT) with high input voltage (400V or more), or if it has a long wiring distance. Consult factory in such a case.
4. Motors operable on 190/380V, motors may be oversize. Please consult factory.

NOMENCLATURE

C	CYCLO DRIVE

Input capacity symbol
(Motor capacity of gearmotors)
Refer to Table 3, Page 11

Special specification symbol (S)

• Mounting positions are shown on page 12.

With or Without Brake
Refer to Table 7, Page 11

C	H	H	M		3	–	6130	Y	–		–		–	43

Reduction ratio
Refer to Tables 8 & 9, Page 13

Suffix
Refer to Table 6, Page 11

Shaft Spec.	Symbol
Metric JIS	No symbol
Inch Size	Y
AGMA I	YA
AGMA II	YB
AGMA III	YC
Metric DIN	G

Cyclo Reducer Frame Size
Refer to Table 4, Page 11

Slow Speed Shaft Direction	Mounting Style	Type of Input
H (Horizontal, slow speed shaft level) **V** (Vertical, slow speed shaft down) **W** (Vertical, slow speed shaft up) **N** (Maintenance-free Universal direction)	**H** (Foot) **V** (V Flange) **F** (Flange)	**M** (Gearmotors) **No symbol** (Reducers) **J, JM** (With adaptor) Refer to Table 5, Page 11 for details.
H 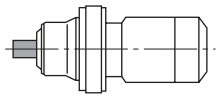	**H** 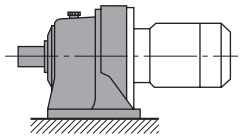	**M** 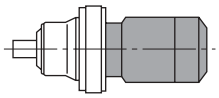
V 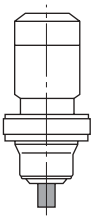	**V** 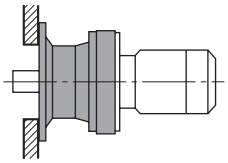	**No symbol** 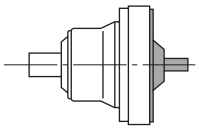
W 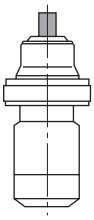	**F** 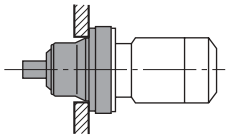	**J** 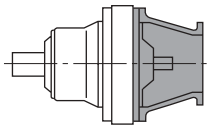
N 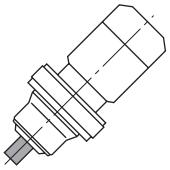		

Note: N - Universal Mounting Maintenance-free is for Frame Size up to 6125 (Single stage), 6125DB (Double stage)

Table 3 Input Capacity Symbol (Motor Capacity of Gearmotors)

4P	Capacity symbol	01	02	03	05	08	1	1H	2	3	4	5
	HP (kW)	1/8 (0.1)	1/4 (0.2)	1/3 (0.25)	1/2 (0.4)	3/4 (0.55)	1 (0.75)	1.5 (1.1)	2 (1.5)	3 (2.2)	4 (3.0)	5 (3.7)
	Capacity Symbol	8	10	15	20	25	30	40	50	60	75	100
	HP (kW)	7.5 (5.5)	10 (7.5)	15 (11)	20 (15)	25 (18.5)	30 (22)	40 (30)	50 (37)	60 (45)	75 (55)	100 (75)

6P	Capacity symbol	206	256	306	406	506	606	756	1006	1256	1506	1756
	HP (kW)	20 (15)	25 (18.5)	30 (22)	40 (30)	50 (37)	60 (45)	75 (55)	100 (75)	125 (90)	150 (110)	175 (132)

Table 4 Cyclo Reducer Frame Size

Single Reduction
6060
6065
6070
6075
6080
6085
6090
6095
6100
6105
610H
6110
6115
6120
6125
612H
6130
6135
6140

Single Reduction
6145
614H
6160
6165
616H
6170
6175
6180
6185
6190
6195
6205
6215
6225
6235
6245
6255
6265
6275

H type is option.

Double Reduction	(Output side + Input side)
6060DA	6060 + 6060
6065DA	6065 + 6065
6070DA	6070 + 6065
6075DA	6075 + 6065
6090DA	6090 + 6075
6095DA	6095 + 6075
6100DA	6100 + 6075
6105DA	6105 + 6075
6120DA	6120 + 6075
6120DB	6120 + 6095
6125DA	6125 + 6075
6125DB	6125 + 6095
6130DA	6130 + 6075
6130DB	6130 + 6095
6130DC	6130 + 6105
6135DA	6135 + 6075
6135DB	6135 + 6095
6135DC	6135 + 6105
6140DA	6140 + 6075
6140DB	6140 + 6095
6140DC	6140 + 6105

Double Reduction	(Output side + Input side)
6145DA	6145 + 6075
6145DB	6145 + 6095
6145DC	6145 + 6105
6160DA	6160 + 6095
6160DB	6160 + 6105
6160DC	6160 + 6125
6165DA	6165 + 6095
6165DB	6165 + 6105
6165DC	6165 + 6125
6170DA	6170 + 6095
6170DB	6170 + 6105
6170DC	6170 + 6125
6175DA	6175 + 6095
6175DB	6175 + 6105
6175DC	6175 + 6125
6180DA	6180 + 6105
6180DB	6180 + 6135
6185DA	6185 + 6105
6185DB	6185 + 6135

Double Reduction	(Output side + Input side)
6190DA	6190 + 6125
6190DB	6190 + 6135
6195DA	6195 + 6125
6195DB	6195 + 6135
6205DA	6205 + 6125
6205DB	6205 + 6135
6215DA	6215 + 6135
6215DB	6215 + 6165
6225DA	6225 + 6135
6225DB	6225 + 6175
6235DA	6235 + 6165
6235DB	6235 + 6185
6245DA	6245 + 6165
6245DB	6245 + 6185
6255DA	6255 + 6175
6255DB	6255 + 6195
6265DA	6265 + 6195
6275DA	6275 + 6195

Table 5 Type of Motor Connection

Type of Motor Connection	Without Motor	With Motor
Integral Motor		M
Free Shaft	–	
W/C-Face Adaptor	J	JM
W/Quill I/P Adaptor	X	XM
Beier	B	BM
With Clutch Brake		CM
With Fluid Coupling		RM

Table 6 Suffix Designation

Reducer Specification	Symbol	Motor Specification	Symbol
Torque Limiter	TL	Modification Right Wall	H3
Light Heavy Radial	R1	Low Backlash	LB
High Cap. Brg. Ductile Casing	R2	AF Motor	AV
Baseplate	BP	Servo Motor	SV
HH Type Ceiling	H1	DC Motor	DV
Modification Left Wall	H2		

Table 7 Brake (Integral Only)

Brake	Symbol
NO	
YES	B

MOUNTING POSITIONS

N = Universal Mounting Maintenance-free is for Frame Size up to 6125 (Single stage), 6125DB (Double stage)

Gearmotors			Speed Reducers		
CHHM (CNHM) 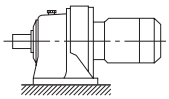	CHFM (CNFM) 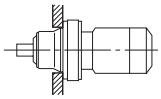	CHVM (CNVM) 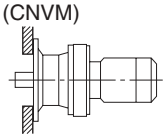	CHH (CNH) 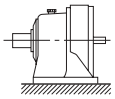	CHF (CNF) 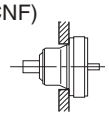	CHV (CNV) 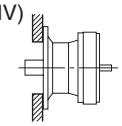
CVHM (CNHM) 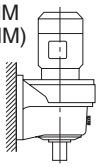	CVFM (CNFM) 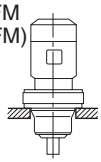	CVVM (CNVM) 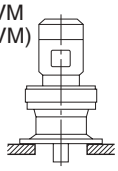	CVH (CNH) 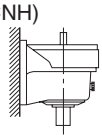	CVF (CNF) 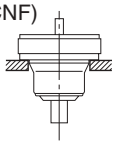	CVV (CNV) 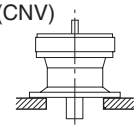
CWHM (CNHM) 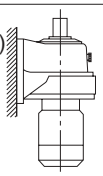	CWFM (CNFM) 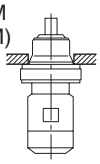	CWVM (CNVM) 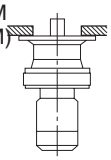	CWH (CNH) 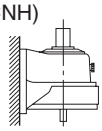	CWF (CNF) 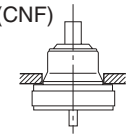	CWV (CNV) 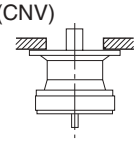
CHHXM (CNHXM) 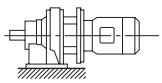 Input side Hollow shaft	CHFXM (CNFXM) 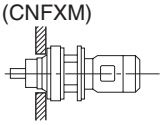 Input side Hollow shaft	CVVXM (CNVXM) 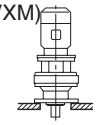 Input side Hollow shaft	CHHM (CNHX) 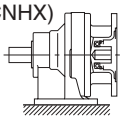 Input side Hollow shaft	CHFX (CNFX) 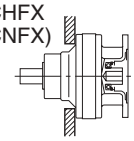 Input side Hollow shaft	CVVX (CNVX) 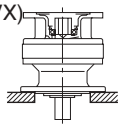 Input side Hollow shaft
CHHJM (CNHJM) 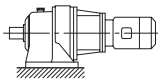 With Adaptor	CHFJM (CNFJM) 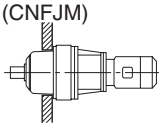 With Adaptor	CVVJM (CNVJM) 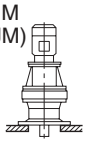 With Adaptor	CHHJ 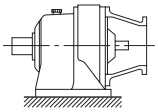 With Adaptor	CHFJ 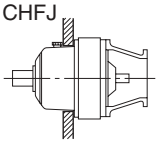 With Adaptor	CVVJ 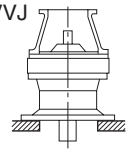 With Adaptor
CHHPM 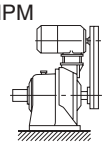 Top Mount Type	CVVPM 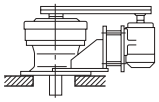 Side Mount Type	CPM 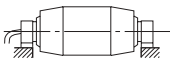 Cyclo motor pully			
CHHBM 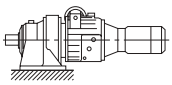 Beier Cyclo Variator	CHFBM 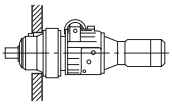 Beier Cyclo Variator	CVVBM 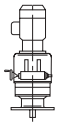 Beier Cyclo Variator			
CHHCM 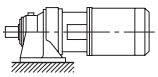 Cyclo Pack with Clutch Brake	C11WM 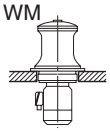 Cyclo capstan	C14VM C15VM 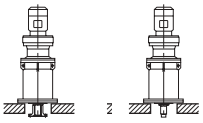 Vertical special base mount			
C10CM 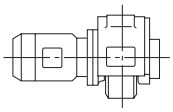 Cyclo wheel	CPC 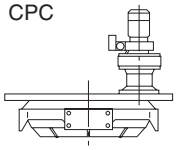 Center post type	C17VM C18VM 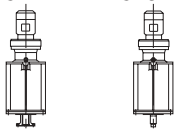 Vertical special base mount			

Because we constantly strive to satisfy individual user requirements, we can provide a wide variety of other special models in addition to those shown above. Please contact us for additional information.

REDUCTION RATIOS

Table 8 Standard Reduction Ratios

Single Reduction									
6	8	11	13	15	17	21	25	29	35
43	51	59	71	87	119				
Double Reduction									
104 (13×8)	121 (11×11)	143 (13×11)	165 (15×11)	195 (15×13)	231 (21×11)	273 (21×13)	319 (29×11)	377 (29×13)	473 (43×11)
559 (43×13)	649 (59×11)	731 (43×17)	841 (29×29)	1003 (59×17)	1247 (43×29)	1479 (87×17)	1849 (43×43)	2065 (59×35)	2537 (59×43)
3045 (87×35)	3481 (59×59)	4437 (87×51)	Note1 5133 (87×59)	6177 (87×71)	7569 (87×87)				

Note 1: Frame size 6205# ~ 6265# are (59×87).

Table 9 Optional Reduction Ratios

Under certain conditions, the following reduction ratios may also be available, please consult factory. (The output shaft RPM shown is an example when coupled with a 4-pole motor)

Reduction Ratio		88 (11×8)	90 (15×6)	102 (17×6)	120 (15×8)	126 (21×6)	136 (17×8)	150 (25×6)	168 (21×8)	169 (13×13)	174 (29×6)	187 (17×11)	200 (25×8)	210 (35×6)	221 (17×13)	225 (15×15)
Output speed RPM	50Hz	16.5	16.1	14.2	12.1	11.5	10.7	9.67	8.63	8.58	8.33	7.75	7.25	6.90	6.56	6.44
	60Hz	19.9	19.4	17.2	14.6	13.9	12.9	11.7	10.4	10.4	10.1	9.36	8.75	8.33	7.92	7.78

Reduction Ratio		232 (29×8)	255 (17×15)	258 (43×6)	275 (25×11)	280 (35×8)	289 (17×17)	306 (51×6)	315 (21×15)	325 (25×13)	344 (43×8)	354 (59×6)	357 (21×17)	375 (25×15)	385 (35×11)	408 (51×8)
Output speed RPM	50Hz	6.25	5.69	5.62	5.27	5.18	5.02	4.74	4.60	4.46	4.22	4.10	4.06	3.87	3.77	3.55
	60Hz	7.54	6.86	6.87	6.36	6.25	6.06	5.72	5.56	5.38	5.09	4.94	4.90	4.67	4.55	4.29

Reduction Ratio		425 (25×17)	426 (71×6)	435 (29×15)	441 (21×21)	455 (35×13)	472 (59×8)	493 (29×17)	522 (87×6)	525 (35×15)	561 (51×11)	568 (71×8)	595 (35×17)	609 (29×21)	625 (25×25)	645 (43×15)
Output speed RPM	50Hz	3.41	3.40	3.33	3.29	3.19	3.07	2.94	2.78	2.76	2.58	2.55	2.44	2.38	2.32	2.25
	60Hz	4.12	4.11	4.02	3.97	3.85	3.71	3.55	3.35	3.33	3.12	3.08	2.94	2.87	2.80	2.71

Reduction Ratio		663 (51×13)	696 (87×8)	725 (29×25)	735 (35×21)	765 (51×15)	767 (59×13)	781 (71×11)	867 (51×17)	875 (35×25)	885 (59×15)	903 (43×21)	923 (71×13)	957 (87×11)	1015 (35×29)	1065 (71×15)
Output speed RPM	50Hz	2.19	2.08	2.00	1.97	1.90	1.89	1.86	1.67	1.66	1.64	1.61	1.57	1.52	1.43	1.36
	60Hz	2.64	2.51	2.41	2.38	2.29	2.28	2.24	2.02	2.00	1.98	1.94	1.90	1.83	1.72	1.64

Reduction Ratio		1071 (51×21)	1075 (43×25)	1131 (87×13)	1207 (71×17)	1225 (35×35)	1239 (59×21)	1275 (51×25)	1305 (87×15)	1475 (59×25)	1491 (71×21)	1505 (43×35)	1711 (59×29)	1775 (71×25)	1785 (51×35)	1827 (87×21)
Output speed RPM	50Hz	1.35	1.35	1.28	1.20	1.18	1.17	1.14	1.11	0.98	0.97	0.96	0.85	0.82	0.81	0.79
	60Hz	1.63	1.63	1.55	1.45	1.43	1.41	1.37	1.34	1.19	1.17	1.16	1.02	0.99	0.98	0.96

Reduction Ratio		2059 (71×29)	2175 (87×25)	2193 (51×43)	2485 (71×35)	2523 (87×29)	2601 (51×51)	3009 (59×51)	3053 (71×43)	3621 (71×51)	3741 (87×43)	4189 (71×59)	5041 (71×71)
Output speed RPM	50Hz	0.70	0.67	0.66	0.58	0.57	0.56	0.48	0.47	0.40	0.39	0.45	0.29
	60Hz	0.85	0.80	0.80	0.70	0.69	0.67	0.58	0.57	0.48	0.47	0.42	0.35

Input Speed
50Hz: 1450RPM
60Hz: 1750RPM

SM-CYCLO® GEARMOTORS

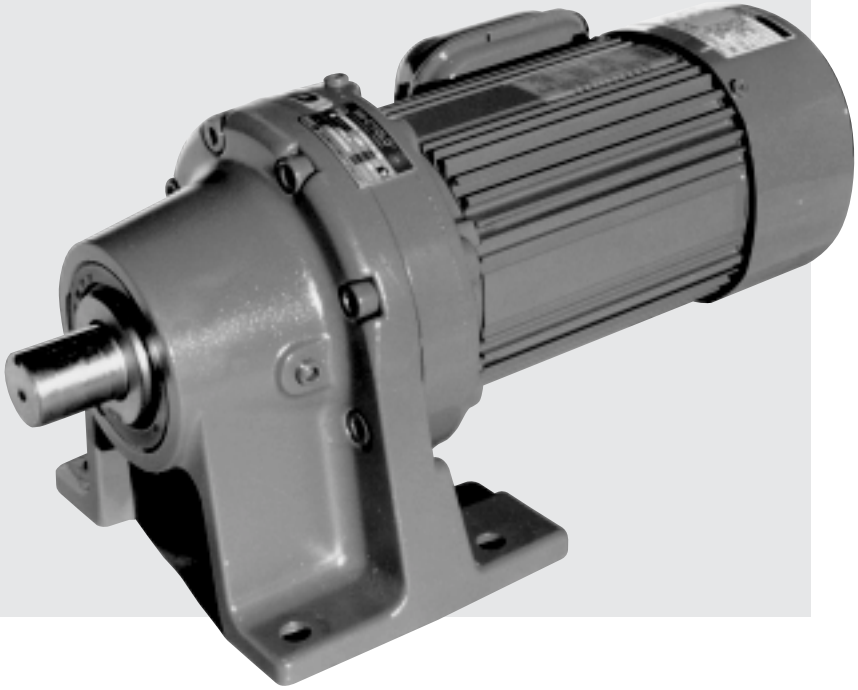

STANDARD SPECIFICATIONS

Table A-1. Standard Gearmotor Specifications[1]

Item		Standard Specification			Standard Specification with Built-in Brake	
Motor	Capacity Range	1/8 HP (0.1kW) x 4P~75 HP (55kW) x 4P 20 HP (15kW) x 6P~75 HP (55kW) x 6P			1/8 HP (0.1kW) x 4P~15 HP (11kW) x 4P•FB Brake (Non Asbestos) 20 HP (15kW) x 6P CMB Brake 25 HP (18.5kW) x 4P~50 HP (37kW) x 4P ESB Brake	
	Enclosure	Totally enclosed fan cooled type (1/8 HP (0.1kW) x 4P totally enclosed non ventilated)			Totally enclosed fan cooled type (1/8 HP (0.1kW) x 4P totally enclosed non ventilated)	
	Power Source	75 HP (55kW) and smaller 200V 50/60Hz 220V 60Hz			20 HP (15kW) and smaller 200V 50/60Hz 220V 60Hz	
	Insulation	P / Insulation	4P	6P	P / Insulation	4P
		Class B	0.55~22kW	15kW	Class B	0.55~15kW
		Class F	30~55kW	18.5~55kW		
	Time Rating	Continuous rating			Continuous rating	
Cyclo Drive	Lubrication Method	Grease lubricated and oil lubricated models available.				
	Speed reduction method	Internal planetary gear mechanism with trochoidal curved tooth profile.				
	Direction of output shaft rotation	Single reduction	Clockwise rotation	As observed from the load when connected to R-U, S-V, T-W motors.		
		Double reduction	Counter-clockwise rotation			
Ambient Conditions	Installation Location	Indoors (minimal dust and humidity)				
	Ambient temperature	–10~40˚C				
	Ambient humidity	Under 85%				
	Elevation	Under 1,000 meters				
	Atmosphere	Well ventilated location, free of corrosive gases, explosive gases, vapors and dust.				
Method of Mounting		CHHM type - with slow speed shaft in horizontal direction and with legs. CVVM type - with slow speed shaft down in vertical direction and with mount. (No restrictions in mounting position of maintenance-free grease lubricated models, and the 2nd character of type symbol indicates “N”)				
Method of coupling with driven machine		Coupling, gears, chain sprocket or belt.				

Table A-2. Standard Conduit Box Orientation[2]

Main frame mounting direction	Indoors (Standard)
Horizontal Type (Slow speed shaft in horizontal direction).	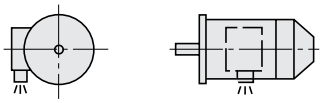
Vertical Type (Slow speed shaft in vertical direction).	

Notes: [1] Refer to the Technical Information Section for motor specification other than standard.
[2] If not specified, the orientation shown in Table A-2 will be used. When the orientation is not standard, refer to the Technical Information Section.

NOMENCLATURE & MOUNTING POSITIONS

Table A-3. Motor Capacity Symbol

4P	Capacity Symbol	01	02	03	05	08	1	1H	2	3	4	5	8	10	15	20	25	30	40	50	60	75	100
	HP (kW)	1/8 (0.1)	1/4 (0.2)	1/3 (0.25)	1/2 (0.4)	3/4 (0.55)	1 (0.75)	1.5 (1.1)	2 (1.5)	3 (2.2)	4 (3.0)	5 (3.7)	7.5 (5.5)	10 (7.5)	15 (11)	20 (15)	25 (18.5)	30 (22)	40 (30)	50 (37)	60 (45)	75 (55)	100 (75)

6P	Capacity Symbol	206	256	306	406	506	606	756	1006	1256	1506	1756
	HP (kW)	20 (15)	25 (18.5)	30 (22)	40 (30)	50 (37)	60 (45)	75 (55)	100 (75)	125 (90)	150 (110)	175 (132)

C	CYCLO DRIVE

Special specification symbol (S)

C N H M [ ] 05 — 6095 Y — [ ] — 25

Reduction ratio

B	With Brake
	No Brake

Slow Speed Shaft Direction	Mounting Style	Type of Input
H (Horizontal, slow speed shaft level) V (Vertical, slow speed shaft down) N (Maintenance-free Universal direction)	H (Foot) V (V Flange) F (Flange)	M (Gearmotors) JM (Wth adaptor)

● For examples of nomenclature and mounting positions, please refer to pages 10-12 in the front of this catalog.

Shaft Spec.	Symbol
Metric JIS	No symbol
Inch Size	Y
AGMA I	YA
AGMA II	YB
AGMA III	YC
Metric DIN	G

Cyclo Reducer Frame Size
Refer to Gearmotor Selection Tables

Example 1

CNHM2 – 6115Y – 29

- Reduction Ratio
- Inch Size
- Frame Size
- Motor Capacity (1.5kWx4P)
- Gearmotors
- Foot Mounting
- Maintenance-free Universal direction

Example 2

CVVM20 – 6225DB – 165

- Reduction Ratio
- Frame Size Double Reduction
- Motor Capacity (15kWx4P)
- Gearmotors
- V Flange Mounting
- Vertical (Slow speed shaft down)

GEARMOTOR SELECTION FLOWCHART

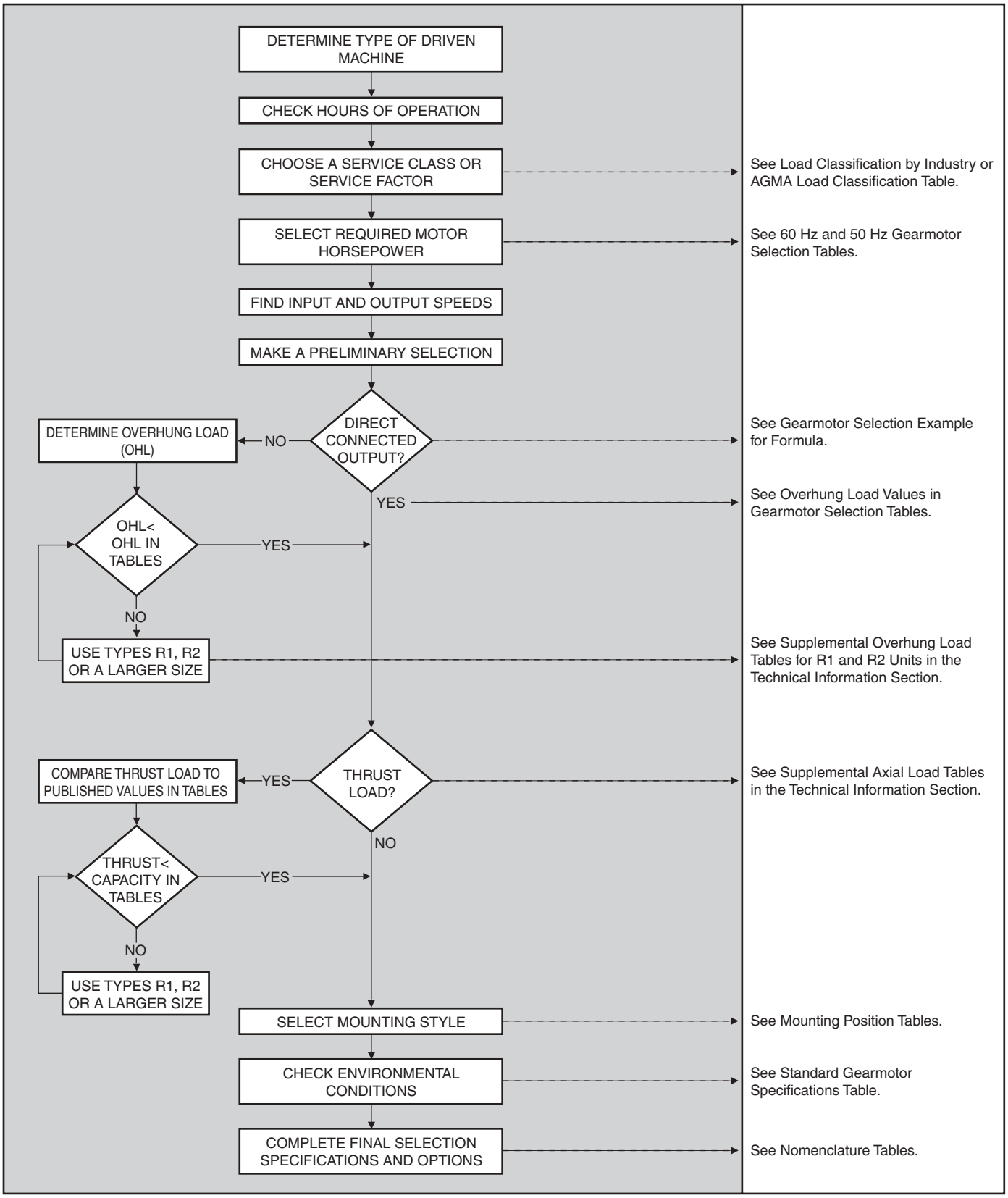

GEARMOTOR SELECTION PROCEDURE

The following information is required to properly select an SM-Cyclo® Gearmotor:

1. Application – Type of Driven Machine	Example:	Belt Conveyor – Uniformly Fed
2. Hours of Operation per Day		12 Hours of Operation per Day
3. Motor Power and Speed		10 HP Motor, 1750 RPM
4. Desired Output Speed		120 RPM
5. Mounting Position and Style		Horizontal, Foot Mounted
6. Environmental Conditions		Inside Industrial Plant
7. Required Options		Motor Brake
8. Electrical Specifications		460 Volts, 60 Hertz, 3 phase
9. Overhung or Thrust Loads		None – Direct Coupled Output
10. Shaft Dimensions – Inch or Metric		Inch Shafting

Review the Basic Information and Recommendations, and then proceed to Selection Example 1.

Selection Example 1

Step 1

Using the information above, choose a Service Class from Table A-6, Load Classification By Application:

Conveyors – Uniformly Loaded or Fed, Operating more than 10 hours per day = Service Class II.

Step 2

Find the 10 Horsepower, 1750-RPM selection table. Go to the closest output speed to 120 RPM, which is 117 RPM. Find the Class II selection. The selection is 10–6140–YB–15.

Step 3

Is there an overhung or thrust load present? If not, then proceed to Step 4. Otherwise, any overhung or thrust load must be checked against the capability of the selection.

To check overhung load use this formula:

$$\text{Overhung Load (OHL)} = \frac{126{,}000 \times HP \times Cf \times Lf \times Fs}{D \times N}$$

HP: Transmitted or Motor HP

Cf: Load Connection Factor

Lf: Load Location Factor

D: Pitch Diameter (in)

N: Shaft RPM

Fs: Shock factor

The specific values for the overhung load factors, as well as a method to evaluate thrust loads, are contained in the Technical Information Section.

Step 4

Select the desired mounting position and housing style from the Mounting Position Chart and the Nomenclature Section. The horizontal, foot mounted Gearmotor designation is CHHM. The unit nomenclature is CHHM10–6140–YB–15.

Step 5

Check environmental conditions: inside industrial plant. No environmental modifications required.

Step 6

Specify desired options: A 460-volt motor brake. Inch dimensioned shafting.

Step 7

Complete final specifications and options. The complete nomenclature is CHHM10-6140-YB-B-15.

Both motor and brake are to be supplied with 3 phase, 60 hertz, and 460-volt power. The “Y” specifies inch shafting. The first “B” designates a Class II selection. The second “B” designates brake motor.

AGMA LOAD CLASSIFICATION TABLES

To make an optimal selection, the capabilities of the Cyclo Gearmotor must be matched to the operational characteristics of the driven machine. Tables A-4 through A-6 describe the recommended minimum service classifications.

For applications not found in the industry or application specific tables (A-5 and A-6), Table A-4 describes the typical operational requirements for each of the service classes.

As an alternate to making a selection based on service class, a service factor may be applied to the motor horsepower. The Gearmotor Selection Tables contain both service factor and service class information.

Table A-4. Service Classifications

Service Class	Operational Requirements
Class I	For steady loads not exceeding normal motor rating, 8 to 10 hours a day. Moderate shock loads where service is intermittent (SM-CYCLO Service Factor: 1.0; AGMA equivalent Service Factor: 1.0).
Class II	For steady loads not exceeding normal motor rating and 24 hours a day service. Moderate shock loads for 8 hours a day (SM-CYCLO Service Factor: 1.3; AGMA equivalent Service Factor: 1.4).
Class III	For moderate shock loads for 24 hours a day. Heavy shock loads for 8 hours a day (SM-CYCLO Service Factor: 1.6; AGMA equivalent Service Factor: 2.0).

Table A-5. Load Classifications Listed By Industry

Application	Class: Up to 10 Hr. per day	Class: 24 Hr. per day
Brewing & Distilling		
Bottling Machinery	I	II
Brew Kettles, Cont. Duty	–	II
Can Filling Machines	I	II
Cookers–Cont. Duty	–	II
Mash Tubs–Cont. Duty	–	II
Scale Hoppers–Frequent Starts	II	II
Clay Working Industry		
Brick Press	III	III
Briquette Machines	III	III
Clay Working Machinery	II	II
Pug Mills	II	II
Distilling (See Brewing)		
Dredges		
Cable Reels	II	–
Conveyors	II	II
Cutter Head Drives	III	III
Jig Drives	III	III
Maneuvering Winches	II	–
Pumps	II	II
Screen Drives	III	III
Stackers	II	II
Utility Winches	II	–
Food Industry		
Beet Slicers	II	II
Bottlings, Can Filling Mach.	I	II
Cereal Cookers	I	II
Dough Mixers	II	II
Meat Grinders	II	II
Lumber Industry		
Barkers–Spindle Feed	II	III
Barkers–Main Drive	III	III
Carriage Drive	Refer to Factory	
Conveyors		
Burner	II	III
Main or Heavy Duty	II	III
Main Log	III	III
Re-Saw Merry-Go-Round	II	III
Slab	III	III
Transfer	II	III
Chains–Floor	II	III
Chains–Green	II	III
Cut-Off Saws–Chain	II	III
Cut-Off Saws–Drag	II	III
Debarking Drums	III	III
Feeds–Edger	II	III
Feeds–Gang	III	III
Feeds–Trimmer	II	III
Log Deck	III	III
Log Hauls–Incline, Well Type	III	III
Log Turning Devices	III	III
Planer Feed	II	III
Planer Tilting Hoists	II	III
Rolls–Live–Off Bearing–Roll Cases	III	III
Sorting Table	II	III
Tipple Hoist	II	III
Transfers–Chain	II	III
Transfers–Craneway	II	III
Tray Drives	II	III
Oil Industry		
Chillers	II	II
Oil Well Pumping	Refer to Factory	
Paraffin Filter Press	II	II
Rotary Kilns	II	II
Paper Mills		
Agitators (Mixers)	II	II
Barker–Auxiliaries–Hyd.	–	III
Barker, Mechanical	–	III
Barking Drum	–	III
Beater & Pulper	–	II
Bleacher	–	II
Calenders	–	II
Calenders–Super	–	II
Converting Mach.–Except Cutters–Platers	–	II
Conveyors	–	II
Couch	–	II
Cutters, Platers	–	III
Cylinders	–	II
Dryers	–	II
Felt Stretchers	–	II
Felt Whippers	–	III
Jordans	–	II
Log Haul	–	III
Presses	–	II
Pulp Machine Reels	–	II
Stock Chests	–	II
Suction Rolls	–	II
Washers & Thickeners	–	II
Winders	–	II
Rubber Industry		
Mixer	III	III
Rubber Calender	II	II
Rubber Mill (2 or more)	II	II
Sheeter	II	II
Tire Building Machines	Refer to Factory	
Tire, Tube Press Openers	Refer to Factory	
Tubers & Stainers	II	II
Sewage Disposal		
Aerators	Refer to Factory	
Bar Screens	I	II
Chemical Feeders	I	II
Collectors	I	II
Dewatering Screens	II	II
Grit Collectors	I	II
Scum Breakers	II	II
Slow or Rapid Mixers	II	II
Sludge Collectors	I	II
Thickeners	II	II
Vacuum Filters	II	II
Textile Industry		
Batchers	II	II
Calenders	II	II
Card Machines	II	II
Cloth Finishing Machines (Calenders, Dryers, Pads, Tenters, Washers)	II	II
Dry Cans	II	II
Dyeing Machinery	II	II
Knitting Machinery	Refer to Factory	
Looms, Mangles, Nappers	II	II
Range Drives	Refer to Factory	
Soapers, Spinners	II	II
Tenter Frames	II	II
Winders	II	II
Yarn Preparatory Machinery (Cards, Spinners, Slashers)	II	II

Table A-6. Load Classifications Listed By Application

Application	Class: Up to 10 Hr. per day	Class: 24 Hr. per day
Agitators		
Pure Liquids	I	II
Liquids and Solids	II	II
Liquids – Variable Density	II	II
Semi-liquids – Variable Density	II	II
Blowers		
Centrifugal	I	II
Lobe	II	II
Vane	I	II
Brewing and Distilling		
Bottling Machinery	I	II
Brew Kettles – Continuous Duty	–	II
Cookers – Continuous Duty	–	II
Mash Tubs – Continuous Duty	–	II
Scale Hopper Frequent Starts	II	II
Can Filling Machines	I	II
Cane Knives	II	II
Car Dumpers	III	–
Car Pullers – Intermittent Duty	I	–
Clarifiers	I	II
Classifiers	II	II
Clay Working Machinery		
Brick Press	III	III
Briquette Machine	III	III
Clay Working Machinery	II	II
Pug Mill	II	II
Compressors		
Centrifugal	I	II
Lobe	II	II
Reciprocating		
Multi-Cylinder	II	II
Single Cylinder	III	III
Conveyors – Uniformly Loaded or Fed		
Apron	I	II
Assembly	I	II
Belt	I	II
Bucket	I	II
Chain	I	II
Flight	I	II
Oven	I	II
Screw	I	II
Conveyors – Heavy Duty Not Uniformly Fed		
Apron	II	II
Assembly	II	II
Belt	II	II
Bucket	II	II
Chain	II	II
Flight	II	II
Live Roll (Package)	I	II
Oven	II	II
Reciprocating	III	III
Screw	II	II
Shaker	III	III
Cranes and Hoists		
Main Hoists	III	III
Heavy Duty	III	III
Medium Duty	II	II
Reversing	II	II
Skip Hoists	II	II
Trolley Drive	II	II
Bridge Drive	II	II
Crushers		
Ore	III	III
Stone	III	III
Dredges		
Cable Reels	II	–
Conveyors	II	II
Cutter Head Drives	III	III
Jig Drives	III	III
Maneuvering Winches	II	–
Pumps	II	II
Screen Drive	III	III
Stackers	II	II
Utility Winches	II	–
Elevators		
Bucket – Uniform Load	I	II
Bucket – Heavy Load	II	II
Bucket – Continous	I	II
Centrifugal Discharge	I	II
Escalators	I	II
Freight	I	II
Gravity Discharge	I	II
Man Lifts	Refer to Factory	
Passenger Service – Hand Lift	III	–
Fans		
Centrifugal	II	II
Cooling Towers Induced Draft	II	II
Forced Draft	Refer to Factory	
Induced Draft	II	II
Large (Mine, etc.)	II	II
Large Industrial	II	II
Light (Small Diameter)	I	II
Feeders		
Apron	II	II
Belt	II	II
Disc	I	II
Reciprocating	III	III
Screw	II	II
Food Industry		
Beet Slicer	II	II
Cereal Cooker	I	II
Dough Mixer	II	II
Meat Grinders	II	II
Generators – (Not Welding)	I	II
Hammer Mills	III	III
Laundry Washers		
Reversing	II	II
Laundry Tumblers	II	II
Line Shafts	Refer to Factory	
Heavy Shock Load	III	III
Moderate Shock Load	II	II
Uniform Load	I	II
Lumber Industry		
Barkers – Spindle Feed	Refer to Factory	
Barkers – Main Drive	Refer to Factory	
Carriage Drive	Refer to Factory	
Conveyors – Burner	II	III
Conveyors – Main or Heavy Duty	II	III
Conveyors – Main Log	III	III
Conveyors – Merry-Go-Round	II	III
Conveyors – Slab	III	III
Conveyors – Transfer	II	III
Conveyors – Waste	II	II
Chains – Floor	II	III
Chains – Green	II	III
Cut-Off Saws – Chain	II	III
Cut-Off Saws – Drag	II	III
Debarking Drums	III	III
Feeds – Edger	II	III
Feeds – Gang	III	III
Feeds – Trimmer	II	III
Log Deck	III	III
Log Hauls – Incline Well Type	III	III
Log Turning Devices	III	III
Planer Feed	II	III
Planer Tilting Hoists	II	III
Rolls – Live – Off Brg. – Roll Cases	III	III
Sorting Table	II	III
Tipple Hoist	II	III
Transfers – Chain	II	III
Transfers – Craneway	II	III
Tray Drives	II	III
Veneer Lathe Drives	Refer to Factory	
Machine Tools		
Bending Roll	II	II
Notching Press – Belt Driven	Refer to Factory	
Plate Planer	III	III
Punch Press – Gear Driven	III	III
Tapping Machines	III	III
Other Machine Tools		
Main Drives	II	II
Auxiliary Drives	I	II
Metal Mills		
Bridle Roll Drives	III	III
Draw Bench – Carriage	III	III
Draw Bench – Main Drive	III	III
Forming Machines	III	III
Pinch Dryer & Scrubber Rolls, Reversing	Refer to Factory	
Slitters	II	II
Table Conveyors		
Non-Reversing	II	III
Reversing	–	III
Winding Reels – Strip	–	III
Wire Drawing & Flattening Machine	II	III
Wire Winding Machine	II	II
Mills, Rotary Type		
Ball	III	III
Cement Kilns		
Dryers & Coolers	II	II
Kilns	II	II
Pebble	III	III
Rod	III	III
Tumbling Barrels	III	III
Mixers		
Concrete Mixers, Continuous	II	II
Concrete Mixers, Intermittent	I	–
Constant Density	I	II
Variable Density	II	II
Oil Industry		
Chillers	II	II
Oil Well Pumping	Refer to Factory	
Paraffin Filter Press	II	II
Rotary Kilns	II	II
Paper Mills		
Aerators	Refer to Factory	
Agitators (Mixers)	II	II
Barker Auxiliaries, Hydraulic	–	III
Barker, Mechanical	–	III
Barking Drum	–	III
Beater & Pulper	–	II
Bleacher	–	II
Calenders	–	II
Calenders – Super	–	II
Converting Machines, except Cutters, Platers	–	II
Conveyors	–	II
Conveyors, Log	–	III
Couch	–	II
Cutters, Platers	–	III
Cylinders	–	II
Dryers	–	II
Felt Stretcher	–	II
Felt Whipper	–	III
Jordans	–	II
Presses	–	II
Pulp Machines, Reel	–	II
Stock Chests	–	II
Suction Roll	–	II
Washers and Thickeners	–	II
Winders	–	II
Printing Presses	I	II
Pullers		
Barge Haul	III	III
Pumps		
Centrifugal	I	II
Proportioning	II	II
Reciprocating		
Single Acting 3 or more Cylinders	II	II
Double Acting 2 or more Cylinders	II	II
Single Acting 1 or 2 Cylinders	Refer to Factory	
Double Acting Single Cylinder	Refer to Factory	
Rotary – Gear Type	I	II
– Lobe, Vane	I	II
Rubber Industry		
Mixer	III	III
Rubber Calender	II	II
Rubber Mill (2 or more)	II	II
Sheeter	II	II
Tire Building Machines	Refer to Factory	
Tire & Tube Press Openers	Refer to Factory	
Tubers and Strainers	II	II
Sewage Disposal Equipment		
Aerators	Refer to Factory	
Bar Screens	I	II
Chemical Feeders	I	II
Collectors, Circuline or Straightline	I	II
Dewatering Screens	II	II
Grit Collectors	I	II
Scum Breakers	II	II
Slow or Rapid Mixers	II	II
Sludge Collectors	I	II
Thickeners	II	II
Vacuum Filters	II	II
Screens		
Air Washing	I	II
Rotary – Stone or Gravel	II	II
Traveling Water Intake	I	II
Slab Pushers	II	II
Steering Gear	II	II
Stokers	I	II
Textile Industry		
Batchers	II	II
Calenders	II	II
Card Machines	II	II
Cloth Finishing Machines (Washers, Pads, Tenters) (Dryers, Calenders, etc.)	II	II
Dry Cans	II	II
Dryers	II	II
Dyeing Machinery	II	II
Knitting Machines (Looms, etc.)	Refer to Factory	
Looms	II	II
Mangles	II	II
Nappers	II	II
Pads	Refer to Factory	
Range Drives		
Slashers	II	II
Soapers	II	II
Spinners	II	II
Tenter Frames	II	II
Washers	II	II
Winders (Other than Batchers)	II	II
Yarn Preparatory Machines (Cards, Spinners, Slashers, etc.)	II	II
Windlass	II	II

RECOMMENDED SERVICE FACTOR MODIFICATIONS FOR FREQUENT START-STOP REQUIREMENTS

For applications having a large number of hourly starts and stops, either consult Sumitomo, or multiply the load classification service factor by the appropriate supplemental service factor below to obtain a new service factor. Select the reducer using the new service factor.

Table A-3. Supplemental Service Factor[1, 2]

Number of starts-stops (Times/hour)	~3 hours/day			~10 hours/day			24 hours/day		
	U (Uniform load)	M (Moderate shock)	H (Heavy shock)	U (Uniform load)	M (Moderate shock)	H (Heavy shock)	U (Uniform load)	M (Moderate shock)	H (Heavy shock)
10	0.80	1.00	1.20	1.00	1.10	1.35	1.20	1.25	1.50
~200	0.85	1.10	1.30	1.10	1.30	1.50	1.25	1.50	1.65
~500	0.90	1.20	1.40	1.15	1.45	1.60	1.30	1.60	1.75

$$\text{The ratio of Inertia Moment (The ratio of GD}^2\text{)} = \frac{\text{Total Inertial Moment (GD}^2\text{) as seen from the motor shaft}}{\text{Inertial Moment (GD}^2\text{) of motor}}$$

U (Uniform load) :Allowable ratio of Inertia Moment (GD^2) $\leqq$ 0.3
M (Moderate shock) :Allowable ratio of Inertia Moment (GD^2) $\leqq$ 3
H (Heavy shock) :Allowable ratio of Inertia Moment (GD^2) $\leqq$ 10

To insure reliable motor performance in frequent start and stop applications, it is recommended that motor thermal ratings also be reviewed. Please refer to the motor thermal rating information on the next page.

Notes: [1] The number of starts-stops includes brake, or clutch operation times.
[2] Consult Sumitomo when starting under loaded conditions.

MOTOR THERMAL RATINGS

Table A-7. Motor Thermal Rating (C x Z)

Motor Power HP (kW)	Allowable C x Z				Motor Moment of Inertia lb•in² (GD²)	
	35% ED[1]	35%~50% ED[1]	50~80% ED[1]	80~100% ED[1]	Standard	with Brake
1/8 (0.1)	3200	3000	2000	1200	1.11 (3.25)	1.20 (3.50)
1/4 (0.2)	2200	2800	2800	2500	1.71 (5.00)	1.88 (5.50)
1/3 (0.25)	2200	2800	2800	2500	1.71 (5.00)	1.88 (5.50)
1/2 (0.4)	1800	2200	1500	1500	2.22 (6.50)	2.31 (6.75)
3/4 (0.55)	1800	2200	1500	1500	3.45 (10.1)	3.79 (11.1)
1 (0.75)	1400	1400	800	500	4.10 (12.0)	4.44 (13.0)
1.5 (1.1)	1400	1400	800	500	6.32 (18.5)	7.11 (20.8)
2 (1.5)	1200	1200	500	400	7.28 (21.3)	8.03 (23.5)
3 (2.2)	1000	900	400	200	11.4 (33.3)	12.8 (37.3)
5 (3.7)	800	800	800	700	29.0 (84.8)	32.7 (95.8)
7.5 (5.5)	300	300	200	150	39.0 (114)	42.7 (125)
10 (7.5)	400	350	300	300	91.6 (268)	104 (303)
15 (11)	200	200	150	150	128 (375)	140 (410)

The calculated C x Z value (steps 1 – 3 outlined below) should be less than the allowable value listed in Table A-7.

1. Obtain the C value:

$$C = \frac{I_M + I_L}{I_M}$$

I_M = Moment of Inertia of Motor.
I_L = Total Moment of Inertia of Load as seen from the motor.

2. Obtain the Z value (number of starts per hour):

a. Assume that one operating period consists of “on-time” ta (sec.), “off-time” tb (sec.) and the motor is started nr (times/sec.).

$$Zr = \frac{3600nr}{ta + tb} \text{ (times/hour)}$$

(b) When inching, ni (times/cycle) is included in 1 cycle (ta + tb), the number of inching times per hour Zi, is then included in the number of starts.

$$Zi = \frac{3600ni}{ta + tb} \text{ (times/hour)}$$

(c) Calculate Z by adding Zr to Zi.

$$Z = Zr + \frac{1}{2}\ Zi = \frac{3600}{ta + tb} \bullet \left(nr + \frac{1}{2}\ ni\right) \text{ (times/hour)}$$

3. Calculate C multiplied by Z:

Use the value of C obtained in step (1) and Z from step (2)

4. Obtain the duty cycle (%ED) and check with Table A-7:

$$\%ED = \frac{ta}{ta + tb} \times 100$$

ta = on-time
tb = off-time

Note: [1] % ED = duty cycle

SELECTION TABLES – 60 Hz

1/8 HP, 0.1 kW, 60 Hz, 1750 RPM

Output Speed	Output Torque		Service Factor		Overhung Load[1]		Selection					Option	Dimension Page[2]		
RPM	in•lb	N•m	SF	AGMA Class	lb	N	HP Symbol	Frame Size	Shaft Spec.	AGMA Class	Ratio	Inverter Duty	CNHM CHHM[3]	CNVM CVVM[4]	CNFM CHFM[5]
292	27.5	3.11	2.00	III	170	756	01	6060	Y	C	6	AV	A-122	A-176	A-204
219	36.7	4.15	2.00	III	194	866	01	6060	Y	C	8	AV	A-122	A-176	A-204
159	50.4	5.70	2.00	III	265	1180	01	6060	Y	C	11	AV	A-122	A-176	A-204
135	59.6	6.74	2.00	III	265	1180	01	6060	Y	C	13	AV	A-122	A-176	A-204
117	68.8	7.78	2.00	III	265	1180	01	6060	Y	C	15	AV	A-122	A-176	A-204
103	78.0	8.81	2.00	III	265	1180	01	6060	Y	C	17	AV	A-122	A-176	A-204
83.3	96.4	10.9	2.00	III	265	1180	01	6060	Y	C	21	AV	A-122	A-176	A-204
70.0	115	13.0	1.10	I	265	1180	01	6060	Y	A	25	AV	A-122	A-176	A-204
			1.66	III	265	1180	01	6065	Y	C	25	AV	A-122	A-176	A-204
			2.30	III	397	1770	01	6070	Y	C	25	AV	A-122	A-176	A-204
60.3	133	15.0	1.10	I	265	1180	01	6060	Y	A	29	AV	A-122	A-176	A-204
			1.66	III	265	1180	01	6065	Y	C	29	AV	A-122	A-176	A-204
			2.26	III	397	1770	01	6070	Y	C	29	AV	A-122	A-176	A-204
50.0	160	18.1	1.10	I	265	1180	01	6060	Y	A	35	AV	A-122	A-176	A-204
			1.43	II	265	1180	01	6065	Y	B	35	AV	A-122	A-176	A-204
			2.11	III	397	1770	01	6070	Y	C	35	AV	A-122	A-176	A-204
40.7	197	22.3	1.13	I	265	1180	01	6065	Y	A	43	AV	A-122	A-176	A-204
			1.70	III	397	1770	01	6070	Y	C	43	AV	A-122	A-176	A-204
			2.26	III	397	1770	01	6075	Y	C	43	AV	A-122	A-176	A-204
34.3	234	26.4	1.00	I	397	1770	01	6070	Y	A	51	AV	A-122	A-176	A-204
			1.43	II	397	1770	01	6075	Y	B	51	AV	A-122	A-176	A-204
			1.92	III	575	2560	01	6080	Y	C	51	AV	A-122	A-176	A-204
29.7	271	30.6	1.00	I	397	1770	01	6070	Y	A	59	AV	A-122	A-176	A-204
			1.36	II	397	1770	01	6075	Y	B	59	AV	A-122	A-176	A-204
			1.85	III	575	2560	01	6080	Y	C	59	AV	A-122	A-176	A-204
24.6	326	36.8	1.20	I	575	2560	01	6080	Y	A	71	AV	A-122	A-176	A-204
			1.87	III	575	2560	01	6085	Y	C	71	AV	A-122	A-176	A-204
			2.52	III	750	3340	01	6090	Y	C	71	-	A-122	A-176	A-204
20.1	399	45.1	1.21	I	575	2560	01	6085	Y	A	87	AV	A-122	A-176	A-204
			2.11	III	750	3340	01	6090	Y	C	87	-	A-122	A-176	A-204
16.8	212	24.0	-	-	265	1180	01	6060DA	Y		104	AV	A-140	A-190	A-224
	265	30.0	-	-	265	1180	01	6065DA	Y		104	AV	A-140	A-190	A-224
	398	45.0	-	-	397	1770	01	6070DA	Y		104	AV	A-140	A-190	A-224
	452	51.1	1.17	I	397	1770	01	6075DA	Y	A	104	AV	A-140	A-190	A-224
			2.94	III	750	3340	01	6090DA	Y	C	104	AV	A-140	A-190	A-224
14.7	546	61.7	1.25	I	750	3340	01	6090	Y	A	119	-	A-122	A-176	A-204
			1.51	II	750	3340	01	6095	Y	B	119	-	A-122	A-176	A-204
14.5	212	24.0	-	-	265	1180	01	6060DA	Y		121	AV	A-140	A-190	A-224
	265	30.0	-	-	256	1140	01	6065DA	Y		121	AV	A-140	A-190	A-224
	398	45.0	-	-	397	1770	01	6070DA	Y		121	AV	A-140	A-190	A-224
	449	50.8	-	-	397	1770	01	6075DA	Y		121	AV	A-140	A-190	A-224
	526	59.4	2.52	III	750	3340	01	6090DA	Y	C	121	AV	A-140	A-190	A-224
12.2	212	24.0	-	-	265	1180	01	6060DA	Y		143	AV	A-140	A-190	A-224
	265	30.0	-	-	265	1180	01	6065DA	Y		143	AV	A-140	A-190	A-224
	398	45.0	-	-	397	1770	01	6070DA	Y		143	AV	A-140	A-190	A-224
	531	60.0	-	-	397	1770	01	6075DA	Y		143	AV	A-140	A-190	A-224
	621	70.2	2.14	III	750	3340	01	6090DA	Y	C	143	AV	A-140	A-190	A-224

Notes: [1] Refer to Technical Information Section for R1 and R2 model Overhung Load information.
[2] CNHM, CHHM, CNFM, CHFM, CNVM, CVVM are type designations, see page A-3.
[3] For Inverter Duty, single reduction, see pages A-154~163; double reduction, see pages A-164~175. For Single Phase, see page A-244.
[4] For Single Phase, see page A-245.
[5] For type CVFM, single reduction, see page A-219; double reduction, see page A-240.

1/8 HP, 0.1 kW, 60 Hz, 1750 RPM

Output Speed	Output Torque		Service Factor		Overhung Load[1]		Selection					Option	Dimension Page[2]		
RPM	in•lb	N•m	SF	AGMA Class	lb	N	HP Symbol	Frame Size	Shaft Spec.	AGMA Class	Ratio	Inverter Duty	CNHM CHHM[3]	CNVM CVVM[4]	CNFM CHFM[5]
10.6	212	24.0	-	-	265	1180	01	6060DA	Y		165	AV	A-140	A-190	A-224
	265	30.0	-	-	265	1180	01	6065DA	Y		165	AV	A-140	A-190	A-224
	398	45.0	-	-	397	1770	01	6070DA	Y		165	AV	A-140	A-190	A-224
	531	60.0	-	-	397	1770	01	6075DA	Y		165	AV	A-140	A-190	A-224
	717	81.0	1.85	III	750	3340	01	6090DA	Y	C	165	AV	A-140	A-190	A-224
			2.47	III	750	3340	01	6095DA	Y	C	165	AV	A-140	A-190	A-224
8.97	212	24.0	-	-	265	1180	01	6060DA	Y		195	AV	A-140	A-190	A-224
	265	30.0	-	-	265	1180	01	6065DA	Y		195	AV	A-140	A-190	A-224
	398	45.0	-	-	397	1770	01	6070DA	Y		195	AV	A-140	A-190	A-224
	531	60.0	-	-	397	1770	01	6075DA	Y		195	AV	A-140	A-190	A-224
	848	95.8	1.57	II	750	3340	01	6090DA	Y	B	195	AV	A-140	A-190	A-224
			2.09	III	750	3340	01	6095DA	Y	C	195	AV	A-140	A-190	A-224
			2.61	III	1210	5400	01	6100DA	Y	C	195	AV	A-140	A-190	A-224
7.58	212	24.0	-	-	265	1180	01	6060DA	Y		231	AV	A-140	A-190	A-224
	265	30.0	-	-	265	1180	01	6065DA	Y		231	AV	A-140	A-190	A-224
	398	45.0	-	-	397	1770	01	6070DA	Y		231	AV	A-140	A-190	A-224
	531	60.0	-	-	397	1770	01	6075DA	Y		231	AV	A-140	A-190	A-224
	1000	113	1.32	II	750	3340	01	6090DA	Y	B	231	AV	A-140	A-190	A-224
			1.76	III	750	3340	01	6095DA	Y	C	231	AV	A-140	A-190	A-224
			2.20	III	1210	5400	01	6100DA	Y	C	231	AV	A-140	A-190	A-224
6.41	212	24.0	-	-	265	1180	01	6060DA	Y		273	AV	A-140	A-190	A-224
	265	30.0	-	-	265	1180	01	6065DA	Y		273	AV	A-140	A-190	A-224
	398	45.0	-	-	397	1770	01	6070DA	Y		273	AV	A-140	A-190	A-224
	531	60.0	-	-	397	1770	01	6075DA	Y		273	AV	A-140	A-190	A-224
	1190	134	1.12	I	750	3340	01	6090DA	Y	A	273	AV	A-140	A-190	A-224
			1.49	II	750	3340	01	6095DA	Y	B	273	AV	A-140	A-190	A-224
			1.86	III	1210	5400	01	6100DA	Y	C	273	AV	A-140	A-190	A-224
			2.24	III	1210	5400	01	6105DA	Y	C	273	AV	A-140	A-190	A-224
5.49	212	24.0	-	-	265	1180	01	6060DA	Y		319	AV	A-140	A-190	A-224
	265	30.0	-	-	265	1180	01	6065DA	Y		319	AV	A-140	A-190	A-224
	398	45.0	-	-	397	1770	01	6070DA	Y		319	AV	A-140	A-190	A-224
	531	60.0	-	-	397	1770	01	6075DA	Y		319	AV	A-140	A-190	A-224
	1330	150	-	-	739	3290	01	6090DA	Y		319	AV	A-140	A-190	A-224
	1390	157	1.28	I	736	3280	01	6095DA	Y	A	319	AV	A-140	A-190	A-224
			1.59	II	1210	5400	01	6100DA	Y	B	319	AV	A-140	A-190	A-224
			1.91	III	1210	5400	01	6105DA	Y	C	319	AV	A-140	A-190	A-224
			3.32	III	2200	9810	01	6120DB	Y	C	319	-	A-140	A-190	A-224
4.64	212	24.0	-	-	265	1180	01	6060DA	Y		377	AV	A-140	A-190	A-224
	265	30.0	-	-	265	1180	01	6065DA	Y		377	AV	A-140	A-190	A-224
	398	45.0	-	-	397	1770	01	6070DA	Y		377	AV	A-140	A-190	A-224
	531	60.0	-	-	397	1770	01	6075DA	Y		377	AV	A-140	A-190	A-224
	1330	150	-	-	739	3290	01	6090DA	Y		377	AV	A-140	A-190	A-224
	1640	185	1.08	I	725	3230	01	6095DA	Y	A	377	AV	A-140	A-190	A-224
			1.35	II	1210	5400	01	6100DA	Y	B	377	AV	A-140	A-190	A-224
			1.62	III	1210	5400	01	6105DA	Y	C	377	AV	A-140	A-190	A-224
			2.81	III	2200	9810	01	6120DB	Y	C	377	-	A-140	A-190	A-224

Notes: [1] Refer to Technical Information Section for R1 and R2 model Overhung Load information.
[2] CNHM, CHHM, CNFM, CHFM, CNVM, CVVM are type designations, see page A-3.
[3] For Inverter Duty, single reduction, see pages A-154~163; double reduction, see pages A-164~175. For Single Phase, see page A-244.
[4] For Single Phase, see page A-245.
[5] For type CVFM, single reduction, see page A-219; double reduction, see page A-240.

SELECTION TABLES – 60 Hz

1/8 HP, 0.1 kW, 60 Hz, 1750 RPM

Output Speed	Output Torque		Service Factor		Overhung Load[1]		Selection					Option	Dimension Page[2]		
RPM	in•lb	N•m	SF	AGMA Class	lb	N	HP Symbol	Frame Size	Shaft Spec.	AGMA Class	Ratio	Inverter Duty	CNHM CHHM[3]	CNVM CVVM[4]	CNFM CHFM[5]
3.70	212	24.0	-	-	265	1180	01	6060DA	Y		473	AV	A-140	A-190	A-224
	265	30.0	-	-	265	1180	01	6065DA	Y		473	AV	A-140	A-190	A-224
	398	45.0	-	-	397	1770	01	6070DA	Y		473	AV	A-140	A-190	A-224
	531	60.0	-	-	373	1660	01	6075DA	Y		473	AV	A-140	A-190	A-224
	1330	150	-	-	743	3310	01	6090DA	Y		473	AV	A-140	A-190	A-224
	1770	200	-	-	723	3220	01	6095DA	Y		473	AV	A-140	A-190	A-224
	2050	232	1.29	I	1210	5400	01	6105DA	Y	A	473	AV	A-140	A-190	A-224
			2.26	III	2200	9810	01	6120DB	Y	C	473	-	A-140	A-190	A-224
3.13	212	24.0	-	-	265	1180	01	6060DA	Y		559	AV	A-140	A-190	A-224
	265	30.0	-	-	265	1180	01	6065DA	Y		559	AV	A-140	A-190	A-224
	398	45.0	-	-	397	1770	01	6070DA	Y		559	AV	A-140	A-190	A-224
	531	60.0	-	-	373	1660	01	6075DA	Y		559	AV	A-140	A-190	A-224
	1330	150	-	-	743	3310	01	6090DA	Y		559	AV	A-140	A-190	A-224
	1770	200	-	-	723	3220	01	6095DA	Y		559	AV	A-140	A-190	A-224
	2210	250	-	-	1210	5400	01	6100DA	Y		559	AV	A-140	A-190	A-224
	2430	275	1.09	I	1210	5400	01	6105DA	Y	A	559	AV	A-140	A-190	A-224
			1.91	III	2200	9810	01	6120DB	Y	C	559	-	A-140	A-190	A-224
			2.29	III	2200	9810	01	6125DB	Y	C	559	-	A-140	A-190	A-224
2.70	398	45.0	-	-	397	1770	01	6070DA	Y		649	AV	A-140	A-190	A-224
	508	57.4	-	-	355	1580	01	6075DA	Y		649	AV	A-140	A-190	A-224
	1290	146	-	-	741	3300	01	6090DA	Y		649	AV	A-140	A-190	A-224
	2210	250	-	-	1210	5400	01	6100DA	Y		649	AV	A-140	A-190	A-224
	2620	296	-	-	1140	5090	01	6105DA	Y		649	AV	A-140	A-190	A-224
	2820	319	1.65	III	2200	9810	01	6120DB	Y	C	649	-	A-140	A-190	A-224
			1.98	III	2200	9810	01	6125DB	Y	C	649	-	A-140	A-190	A-224
2.39	212	24.0	-	-	265	1180	01	6060DA	Y		731	AV	A-140	A-190	A-224
	265	30.0	-	-	265	1180	01	6065DA	Y		731	AV	A-140	A-190	A-224
	398	45.0	-	-	397	1770	01	6070DA	Y		731	AV	A-140	A-190	A-224
	531	60.0	-	-	373	1660	01	6075DA	Y		731	AV	A-140	A-190	A-224
	1330	150	-	-	743	3310	01	6090DA	Y		731	AV	A-140	A-190	A-224
	1770	200	-	-	723	3220	01	6095DA	Y		731	AV	A-140	A-190	A-224
	2210	250	-	-	1210	5400	01	6100DA	Y		731	AV	A-140	A-190	A-224
	2650	300	-	-	1210	5400	01	6105DA	Y		731	AV	A-140	A-190	A-224
	3180	359	1.46	II	2200	9810	01	6120DB	Y	B	731	-	A-140	A-190	A-224
			1.75	III	2200	9810	01	6125DB	Y	C	731	-	A-140	A-190	A-224
2.08	212	24.0	-	-	265	1180	01	6060DA	Y		841	AV	A-140	A-190	A-224
	265	30.0	-	-	265	1180	01	6065DA	Y		841	AV	A-140	A-190	A-224
	398	45.0	-	-	397	1770	01	6070DA	Y		841	AV	A-140	A-190	A-224
	531	60.0	-	-	397	1770	01	6075DA	Y		841	AV	A-140	A-190	A-224
	1330	150	-	-	739	3290	01	6090DA	Y		841	AV	A-140	A-190	A-224
	1770	200	-	-	718	3200	01	6095DA	Y		841	AV	A-140	A-190	A-224
	2210	250	-	-	1210	5400	01	6100DA	Y		841	AV	A-140	A-190	A-224
	2650	300	-	-	1210	5400	01	6105DA	Y		841	AV	A-140	A-190	A-224
	3650	413	1.26	I	2200	9810	01	6120DB	Y	A	841	-	A-140	A-190	A-224
			1.53	II	2200	9810	01	6125DB	Y	B	841	-	A-140	A-190	A-224

Notes: [1] Refer to Technical Information Section for R1 and R2 model Overhung Load information.
[2] CNHM, CHHM, CNFM, CHFM, CNVM, CVVM are type designations, see page A-3.
[3] For Inverter Duty, single reduction, see pages A-154~163; double reduction, see pages A-164~175. For Single Phase, see page A-244.
[4] For Single Phase, see page A-245.
[5] For type CVFM, single reduction, see page A-219; double reduction, see page A-240.

1/8 HP, 0.1 kW, 60 Hz, 1750 RPM

Output Speed	Output Torque		Service Factor		Overhung Load[1]		Selection					Option	Dimension Page[2]		
RPM	in•lb	N•m	SF	AGMA Class	lb	N	HP Symbol	Frame Size	Shaft Spec.	AGMA Class	Ratio	Inverter Duty	CNHM CHHM[3]	CNVM CVVM[4]	CNFM CHFM[5]
1.74	398	45.0	-	-	397	1770	01	6070DA	Y		1003	AV	A-140	A-190	A-224
	508	57.4	-	-	355	1580	01	6075DA	Y		1003	AV	A-140	A-190	A-224
	1290	146	-	-	741	3300	01	6090DA	Y		1003	AV	A-140	A-190	A-224
	2210	250	-	-	1210	5400	01	6100DA	Y		1003	AV	A-140	A-190	A-224
	2620	296	-	-	1140	5090	01	6105DA	Y		1003	AV	A-140	A-190	A-224
	4360	493	1.28	I	2200	9810	01	6125DB	Y	A	1003	-	A-140	A-190	A-224
1.40	212	24.0	-	-	265	1180	01	6060DA	Y		1247	AV	A-140	A-190	A-224
	265	30.0	-	-	265	1180	01	6065DA	Y		1247	AV	A-140	A-190	A-224
	398	45.0	-	-	397	1770	01	6070DA	Y		1247	AV	A-140	A-190	A-224
	531	60.0	-	-	373	1660	01	6075DA	Y		1247	AV	A-140	A-190	A-224
	1330	150	-	-	743	3310	01	6090DA	Y		1247	AV	A-140	A-190	A-224
	1770	200	-	-	723	3220	01	6095DA	Y		1247	AV	A-140	A-190	A-224
	2210	250	-	-	1210	5400	01	6100DA	Y		1247	AV	A-140	A-190	A-224
	2650	300	-	-	1210	5400	01	6105DA	Y		1247	AV	A-140	A-190	A-224
	4650	525	-	-	2200	9810	01	6120DB	Y		1247	-	A-140	A-190	A-224
	5410	612	1.03	I	2200	9810	01	6125DB	Y	A	1247	-	A-140	A-190	A-224
1.18	1330	150	-	-	743	3310	01	6090DA	Y		1479	AV	A-140	A-190	A-224
	1710	193	-	-	727	3240	01	6095DA	Y		1479	AV	A-140	A-190	A-224
	2210	250	-	-	1210	5400	01	6100DA	Y		1479	AV	A-140	A-190	A-224
	2650	300	-	-	1070	4780	01	6105DA	Y		1479	AV	A-140	A-190	A-224
	4650	525	-	-	2200	9780	01	6120DB	Y		1479	-	A-140	A-190	A-224
	5570	630	-	-	2150	9560	01	6125DB	Y		1479	-	A-140	A-190	A-224
0.946	212	24.0	-	-	265	1180	01	6060DA	Y		1849	AV	A-140	A-190	A-224
	265	30.0	-	-	265	1180	01	6065DA	Y		1849	AV	A-140	A-190	A-224
	398	45.0	-	-	397	1770	01	6070DA	Y		1849	AV	A-140	A-190	A-224
	531	60.0	-	-	373	1660	01	6075DA	Y		1849	AV	A-140	A-190	A-224
	1330	150	-	-	743	3310	01	6090DA	Y		1849	AV	A-140	A-190	A-224
	1770	200	-	-	723	3220	01	6095DA	Y		1849	AV	A-140	A-190	A-224
	2210	250	-	-	1210	5400	01	6100DA	Y		1849	AV	A-140	A-190	A-224
	2650	300	-	-	1210	5400	01	6105DA	Y		1849	AV	A-140	A-190	A-224
	4650	525	-	-	2200	9810	01	6120DB	Y		1849	-	A-140	A-190	A-224
	5570	630	-	-	2200	9810	01	6125DB	Y		1849	-	A-140	A-190	A-224
0.847	398	45.0	-	-	397	1770	01	6070DA	Y		2065	AV	A-140	A-190	A-224
	508	57.4	-	-	355	1580	01	6075DA	Y		2065	AV	A-140	A-190	A-224
	1290	146	-	-	741	3300	01	6090DA	Y		2065	AV	A-140	A-190	A-224
	2210	250	-	-	1210	5400	01	6100DA	Y		2065	AV	A-140	A-190	A-224
	2620	296	-	-	1140	5090	01	6105DA	Y		2065	AV	A-140	A-190	A-224
	4650	525	-	-	2200	9810	01	6120DB	Y		2065	-	A-140	A-190	A-224
	5570	630	-	-	2200	9810	01	6125DB	Y		2065	-	A-140	A-190	A-224
0.690	398	45.0	-	-	397	1770	01	6070DA	Y		2537	AV	A-140	A-190	A-224
	508	57.4	-	-	355	1580	01	6075DA	Y		2537	AV	A-140	A-190	A-224
	1290	146	-	-	741	3300	01	6090DA	Y		2537	AV	A-140	A-190	A-224
	2210	250	-	-	1210	5400	01	6100DA	Y		2537	AV	A-140	A-190	A-224
	2620	296	-	-	1140	5090	01	6105DA	Y		2537	AV	A-140	A-190	A-224
	4650	525	-	-	2200	9810	01	6120DB	Y		2537	-	A-140	A-190	A-224
	5570	630	-	-	2200	9810	01	6125DB	Y		2537	-	A-140	A-190	A-224

Notes: [1] Refer to Technical Information Section for R1 and R2 model Overhung Load information.
[2] CNHM, CHHM, CNFM, CHFM, CNVM, CVVM are type designations, see page A-3.
[3] For Inverter Duty, single reduction, see pages A-154~163; double reduction, see pages A-164~175. For Single Phase, see page A-244.
[4] For Single Phase, see page A-245.
[5] For type CVFM, single reduction, see page A-219; double reduction, see page A-240.

SELECTION TABLES – 60 Hz

1/8 HP, 0.1 kW, 60 Hz, 1750 RPM

Output Speed	Output Torque		Service Factor		Overhung Load[1]		Selection					Option	Dimension Page[2]		
RPM	in•lb	N•m	SF	AGMA Class	lb	N	HP Symbol	Frame Size	Shaft Spec.	AGMA Class	Ratio	Inverter Duty	CNHM CHHM[3]	CNVM CVVM[4]	CNFM CHFM[5]
0.575	1330	150	-	-	743	3310	01	6090DA	Y		3045	AV	A-140	A-190	A-224
	1700	192	-	-	727	3240	01	6095DA	Y		3045	AV	A-140	A-190	A-224
	2210	250	-	-	1210	5400	01	6100DA	Y		3045	AV	A-140	A-190	A-224
	2650	300	-	-	1070	4780	01	6105DA	Y		3045	AV	A-140	A-190	A-224
	4650	525	-	-	2200	9780	01	6120DB	Y		3045	-	A-140	A-190	A-224
	5570	630	-	-	2150	9560	01	6125DB	Y		3045	-	A-140	A-190	A-224
0.503	1290	146	-	-	741	3300	01	6090DA	Y		3481	AV	A-140	A-190	A-224
	2210	250	-	-	1210	5400	01	6100DA	Y		3481	AV	A-140	A-190	A-224
	2620	296	-	-	1140	5090	01	6105DA	Y		3481	AV	A-140	A-190	A-224
	4650	525	-	-	2200	9810	01	6120DB	Y		3481	-	A-140	A-190	A-224
	5570	630	-	-	2200	9810	01	6125DB	Y		3481	-	A-140	A-190	A-224
0.394	1330	150	-	-	743	3310	01	6090DA	Y		4437	AV	A-140	A-190	A-224
	1700	192	-	-	727	3240	01	6095DA	Y		4437	AV	A-140	A-190	A-224
	2210	250	-	-	1210	5400	01	6100DA	Y		4437	AV	A-140	A-190	A-224
	2650	300	-	-	1070	4780	01	6105DA	Y		4437	AV	A-140	A-190	A-224
	4650	525	-	-	2200	9780	01	6120DB	Y		4437	-	A-140	A-190	A-224
	5570	630	-	-	2150	9560	01	6125DB	Y		4437	-	A-140	A-190	A-224
0.341	1330	150	-	-	743	3310	01	6090DA	Y		5133	AV	A-140	A-190	A-224
	1700	192	-	-	727	3240	01	6095DA	Y		5133	AV	A-140	A-190	A-224
	2210	250	-	-	1210	5400	01	6100DA	Y		5133	AV	A-140	A-190	A-224
	2650	300	-	-	1070	4780	01	6105DA	Y		5133	AV	A-140	A-190	A-224
	4650	525	-	-	2200	9780	01	6120DB	Y		5133	-	A-140	A-190	A-224
	5570	630	-	-	2150	9560	01	6125DB	Y		5133	-	A-140	A-190	A-224
0.283	4650	525	-	-	2200	9780	01	6120DB	Y		6177	-	A-140	A-190	A-224
	5570	630	-	-	2150	9560	01	6125DB	Y		6177	-	A-140	A-190	A-224
0.231	4650	525	-	-	2200	9780	01	6120DB	Y		7569	-	A-140	A-190	A-224
	5570	630	-	-	2150	9560	01	6125DB	Y		7569	-	A-140	A-190	A-224

1/4 HP, 0.2 kW, 60 Hz, 1750 RPM

Output Speed	Output Torque		Service Factor		Overhung Load[1]		Selection					Option	Dimension Page[2]		
RPM	in•lb	N•m	SF	AGMA Class	lb	N	HP Symbol	Frame Size	Shaft Spec.	AGMA Class	Ratio	Inverter Duty	CNHM CHHM[3]	CNVM CVVM[4]	CNFM CHFM[5]
292	55.0	6.22	1.00	I	169	751	02	6060	Y	A	6	AV	A-122	A-176	A-204
			1.43	II	169	751	02	6065	Y	B	6	AV	A-122	A-176	A-204
			1.74	III	294	1310	02	6070	Y	C	6	AV	A-122	A-176	A-204
			2.04	III	294	1310	02	6075	Y	C	6	AV	A-122	A-176	A-204
219	73.3	8.29	1.00	I	193	859	02	6060	Y	A	8	AV	A-122	A-176	A-204
			1.43	II	193	859	02	6065	Y	B	8	AV	A-122	A-176	A-204
			1.74	III	326	1450	02	6070	Y	C	8	AV	A-122	A-176	A-204
			2.04	III	326	1450	02	6075	Y	C	8	AV	A-122	A-176	A-204
159	101	11.4	1.00	I	263	1170	02	6060	Y	A	11	AV	A-122	A-176	A-204
			1.43	II	263	1170	02	6065	Y	B	11	AV	A-122	A-176	A-204
			1.74	III	366	1630	02	6070	Y	C	11	AV	A-122	A-176	A-204
			2.04	III	366	1630	02	6075	Y	C	11	AV	A-122	A-176	A-204

Notes: [1] Refer to Technical Information Section for R1 and R2 model Overhung Load information.
[2] CNHM, CHHM, CNFM, CHFM, CNVM, CVVM are type designations, see page A-3.
[3] For Inverter Duty, single reduction, see pages A-154~163; double reduction, see pages A-164~175. For Single Phase, see page A-244.
[4] For Single Phase, see page A-245.
[5] For type CVFM, single reduction, see page A-219; double reduction, see page A-240.

1/4 HP, 0.2 kW, 60 Hz, 1750 RPM

Output Speed	Output Torque		Service Factor		Overhung Load[1]		Selection					Option	Dimension Page[2]		
RPM	in•lb	N•m	SF	AGMA Class	lb	N	HP Symbol	Frame Size	Shaft Spec.	AGMA Class	Ratio	Inverter Duty	CNHM CHHM[3]	CNVM CVVM[4]	CNFM CHFM[5]
135	119	13.5	1.00	I	265	1180	02	6060	Y	A	13	AV	A-122	A-176	A-204
			1.43	II	265	1180	02	6065	Y	B	13	AV	A-122	A-176	A-204
			1.74	III	386	1720	02	6070	Y	C	13	AV	A-122	A-176	A-204
			2.04	III	386	1720	02	6075	Y	C	13	AV	A-122	A-176	A-204
117	138	15.6	1.00	I	265	1180	02	6060	Y	A	15	AV	A-122	A-176	A-204
			1.43	II	265	1180	02	6065	Y	B	15	AV	A-122	A-176	A-204
			1.74	III	388	1730	02	6070	Y	C	15	AV	A-122	A-176	A-204
			2.04	III	388	1730	02	6075	Y	C	15	AV	A-122	A-176	A-204
103	156	17.6	1.00	I	265	1180	02	6060	Y	A	17	AV	A-122	A-176	A-204
			1.43	II	265	1180	02	6065	Y	B	17	AV	A-122	A-176	A-204
			1.74	III	397	1770	02	6070	Y	C	17	AV	A-122	A-176	A-204
			2.04	III	397	1770	02	6075	Y	C	17	AV	A-122	A-176	A-204
83.3	193	21.8	1.17	I	265	1180	02	6065	Y	A	21	AV	A-122	A-176	A-204
			1.60	III	397	1770	02	6070	Y	C	21	AV	A-122	A-176	A-204
			2.04	III	397	1770	02	6075	Y	C	21	AV	A-122	A-176	A-204
70.0	229	25.9	0.83	-	265	1180	02	6065	Y		25	AV	A-122	A-176	A-204
			1.15	I	397	1770	02	6070	Y	A	25	AV	A-122	A-176	A-204
			1.47	II	397	1770	02	6075	Y	B	25	AV	A-122	A-176	A-204
			1.70	III	573	2550	02	6080	Y	C	25	AV	A-122	A-176	A-204
			2.38	III	573	2550	02	6085	Y	C	25	AV	A-122	A-176	A-204
60.3	266	30.1	0.83	-	265	1180	02	6065	Y		29	AV	A-122	A-176	A-204
			1.13	I	397	1770	02	6070	Y	A	29	AV	A-122	A-176	A-204
			1.43	II	397	1770	02	6075	Y	B	29	AV	A-122	A-176	A-204
			1.70	III	575	2560	02	6080	Y	C	29	AV	A-122	A-176	A-204
			2.34	III	575	2560	02	6085	Y	C	29	AV	A-122	A-176	A-204
50.0	321	36.3	1.06	I	397	1770	02	6070	Y	A	35	AV	A-122	A-176	A-204
			1.40	II	397	1770	02	6075	Y	B	35	AV	A-122	A-176	A-204
			1.64	III	575	2560	02	6080	Y	C	35	AV	A-122	A-176	A-204
			1.86	III	575	2560	02	6085	Y	C	35	AV	A-122	A-176	A-204
			3.06	III	750	3340	02	6090	Y	C	35	AV	A-122	A-176	A-204
40.7	395	44.6	1.13	I	397	1770	02	6075	Y	A	43	AV	A-122	A-176	A-204
			1.47	II	575	2560	02	6085	Y	B	43	AV	A-122	A-176	A-204
			2.18	III	750	3340	02	6090	Y	C	43	AV	A-122	A-176	A-204
34.3	468	52.9	1.21	I	575	2560	02	6085	Y	A	51	AV	A-122	A-176	A-204
			1.66	III	750	3340	02	6090	Y	C	51	AV	A-122	A-176	A-204
			2.11	III	750	3340	02	6095	Y	C	51	AV	A-122	A-176	A-204
29.7	541	61.2	1.17	I	575	2560	02	6085	Y	A	59	AV	A-122	A-176	A-204
			1.55	II	750	3340	02	6090	Y	B	59	AV	A-122	A-176	A-204
			1.87	III	750	3340	02	6095	Y	C	59	AV	A-122	A-176	A-204
			2.58	III	1210	5400	02	6100	Y	C	59	AV	A-122	A-176	A-204
24.6	651	73.6	0.94	-	564	2510	02	6085	Y		71	AV	A-122	A-176	A-204
			1.26	I	750	3340	02	6090	Y	A	71	AV	A-122	A-176	A-204
			1.51	II	750	3340	02	6095	Y	B	71	AV	A-122	A-176	A-204
			2.18	III	1210	5400	02	6100	Y	C	71	AV	A-122	A-176	A-204
20.1	798	90.2	1.06	I	750	3340	02	6090	Y	A	87	AV	A-122	A-176	A-204
			1.51	II	750	3340	02	6095	Y	B	87	AV	A-122	A-176	A-204
			2.17	III	1210	5400	02	6100	Y	C	87	AV	A-122	A-176	A-204

Notes: [1] Refer to Technical Information Section for R1 and R2 model Overhung Load information.
[2] CNHM, CHHM, CNFM, CHFM, CNVM, CVVM are type designations, see page A-3.
[3] For Inverter Duty, single reduction, see pages A-154~163; double reduction, see pages A-164~175. For Single Phase, see page A-244.
[4] For Single Phase, see page A-245.
[5] For type CVFM, single reduction, see page A-219; double reduction, see page A-240.

SELECTION TABLES – 60 Hz

1/4 HP, 0.2 kW, 60 Hz, 1750 RPM

Output Speed	Output Torque		Service Factor		Overhung Load[1]		Selection					Option	Dimension Page[2]		
RPM	in•lb	N•m	SF	AGMA Class	lb	N	HP Symbol	Frame Size	Shaft Spec.	AGMA Class	Ratio	Inverter Duty	CNHM CHHM[3]	CNVM CVVM[4]	CNFM CHFM[5]
16.8	531	60.0	-	-	397	1770	02	6075DA	Y		104	AV	A-140	A-190	A-224
	902	102	1.47	II	750	3340	02	6090DA	Y	B	104	AV	A-140	A-190	A-224
			1.77	III	750	3340	02	6095DA	Y	C	104	AV	A-140	A-190	A-224
			2.15	III	1210	5400	02	6100DA	Y	C	104	AV	A-140	A-190	A-224
14.7	1090	123	1.05	I	1210	5400	02	6100	Y	A	119	AV	A-122	A-176	A-204
			1.43	II	1210	5400	02	6105	Y	B	119	AV	A-122	A-176	A-204
14.5	1050	119	1.26	I	750	3340	02	6090DA	Y	A	121	AV	A-140	A-190	A-224
			1.35	II	750	3340	02	6095DA	Y	B	121	AV	A-140	A-190	A-224
			2.10	III	1210	5400	02	6100DA	Y	C	121	AV	A-140	A-190	A-224
			2.15	III	1210	5400	02	6105DA	Y	C	121	AV	A-140	A-190	A-224
12.2	1240	140	1.07	I	750	3340	02	6090DA	Y	A	143	AV	A-140	A-190	A-224
			1.30	II	750	3340	02	6095DA	Y	B	143	AV	A-140	A-190	A-224
			1.78	III	1210	5400	02	6100DA	Y	C	143	AV	A-140	A-190	A-224
			2.14	III	1210	5400	02	6105DA	Y	C	143	AV	A-140	A-190	A-224
10.6	1330	150	-	-	750	3340	02	6090DA	Y		165	AV	A-140	A-190	A-224
	1430	162	1.23	I	750	3340	02	6095DA	Y	A	165	AV	A-140	A-190	A-224
			1.54	II	1210	5400	02	6100DA	Y	B	165	AV	A-140	A-190	A-224
			1.85	III	1210	5400	02	6105DA	Y	C	165	AV	A-140	A-190	A-224
			3.24	III	2200	9810	02	6120DB	Y	C	165	AV	A-140	A-190	A-224
8.97	1330	150	-	-	750	3340	02	6090DA	Y		195	AV	A-140	A-190	A-224
	1700	192	1.04	I	750	3340	02	6095DA	Y	A	195	AV	A-140	A-190	A-224
			1.31	II	1210	5400	02	6100DA	Y	B	195	AV	A-140	A-190	A-224
			1.57	II	1210	5400	02	6105DA	Y	B	195	AV	A-140	A-190	A-224
			2.74	III	2200	9810	02	6120DB	Y	C	195	AV	A-140	A-190	A-224
7.58	1330	150	-	-	750	3340	02	6090DA	Y		231	AV	A-140	A-190	A-224
	1770	200	-	-	750	3340	02	6095DA	Y		231	AV	A-140	A-190	A-224
	2010	227	1.10	I	1210	5400	02	6100DA	Y	A	231	AV	A-140	A-190	A-224
			1.32	II	1210	5400	02	6105DA	Y	B	231	AV	A-140	A-190	A-224
			2.31	III	2200	9810	02	6120DB	Y	C	231	AV	A-140	A-190	A-224
6.41	1330	150	-	-	750	3340	02	6090DA	Y		273	AV	A-140	A-190	A-224
	1770	200	-	-	750	3340	02	6095DA	Y		273	AV	A-140	A-190	A-224
	2210	250	-	-	1210	5400	02	6100DA	Y		273	AV	A-140	A-190	A-224
	2370	268	1.12	I	1210	5400	02	6105DA	Y	A	273	AV	A-140	A-190	A-224
			1.95	III	2200	9810	02	6120DB	Y	C	273	AV	A-140	A-190	A-224
			2.15	III	2200	9810	02	6125DB	Y	C	273	AV	A-140	A-190	A-224
5.49	1770	200	-	-	718	3200	02	6095DA	Y		319	AV	A-140	A-190	A-224
	2210	250	-	-	1210	5400	02	6100DA	Y		319	AV	A-140	A-190	A-224
	2650	300	-	-	1210	5400	02	6105DA	Y		319	AV	A-140	A-190	A-224
	2770	313	1.66	III	2200	9810	02	6120DB	Y	C	319	AV	A-140	A-190	A-224
			2.01	III	2200	9810	02	6125DB	Y	C	319	AV	A-140	A-190	A-224
			2.49	III	3300	14700	02	6130DC	Y	C	319	-	A-142	A-192	A-226
4.64	1770	200	-	-	718	3200	02	6095DA	Y		377	AV	A-140	A-190	A-224
	2210	250	-	-	1210	5400	02	6100DA	Y		377	AV	A-140	A-190	A-224
	2650	300	-	-	1210	5400	02	6105DA	Y		377	AV	A-140	A-190	A-224
	3270	370	1.40	II	2200	9810	02	6120DB	Y	B	377	AV	A-140	A-190	A-224
			1.70	III	2200	9810	02	6125DB	Y	C	377	AV	A-140	A-190	A-224
			2.11	III	3300	14700	02	6130DC	Y	C	377	-	A-142	A-192	A-226

Notes: [1] Refer to Technical Information Section for R1 and R2 model Overhung Load information.
[2] CNHM, CHHM, CNFM, CHFM, CNVM, CVVM are type designations, see page A-3.
[3] For Inverter Duty, single reduction, see pages A-154~163; double reduction, see pages A-164~175. For Single Phase, see page A-244.
[4] For Single Phase, see page A-245.
[5] For type CVFM, single reduction, see page A-219; double reduction, see page A-240.

1/4 HP, 0.2 kW, 60 Hz, 1750 RPM

Output Speed	Output Torque		Service Factor		Overhung Load[1]		Selection					Option	Dimension Page[2]		
RPM	in•lb	N•m	SF	AGMA Class	lb	N	HP Symbol	Frame Size	Shaft Spec.	AGMA Class	Ratio	Inverter Duty	CNHM CHHM[3]	CNVM CVVM[4]	CNFM CHFM[5]
3.70	2210	250	-	-	1210	5400	02	6100DA	Y		473	AV	A-140	A-190	A-224
	2650	300	-	-	1210	5400	02	6105DA	Y		473	AV	A-140	A-190	A-224
	4110	465	1.13	I	2200	9810	02	6120DB	Y	A	473	AV	A-140	A-190	A-224
			1.36	II	2200	9810	02	6125DB	Y	B	473	AV	A-140	A-190	A-224
			1.68	III	3300	14700	02	6130DC	Y	C	473	-	A-142	A-192	A-226
			2.02	III	3300	14700	02	6135DC	Y	C	473	-	A-142	A-192	A-226
			2.65	III	3590	16000	02	6140DB	Y	C	473	AV	A-142	A-192	A-226
3.13	2650	300	-	-	1210	5400	02	6105DA	Y		559	AV	A-140	A-190	A-224
	4650	525	-	-	2200	9810	02	6120DB	Y		559	AV	A-140	A-190	A-224
	4860	549	1.15	I	2200	9810	02	6125DB	Y	A	559	AV	A-140	A-190	A-224
			1.42	II	3300	14700	02	6130DC	Y	B	559	-	A-142	A-192	A-226
			1.71	III	3300	14700	02	6135DC	Y	C	559	-	A-142	A-192	A-226
			2.24	III	3590	16000	02	6140DB	Y	C	559	AV	A-142	A-192	A-226
2.70	4650	525	-	-	2200	9810	02	6120DB	Y		649	AV	A-140	A-190	A-224
	5650	638	0.98	-	2200	9810	02	6125DB	Y		649	AV	A-140	A-190	A-224
			1.43	II	3300	14700	02	6130DC	Y	B	649	-	A-142	A-192	A-226
			1.65	III	3300	14700	02	6135DC	Y	C	649	-	A-142	A-192	A-226
			2.15	III	3590	16000	02	6145DB	Y	C	649	AV	A-142	A-192	A-226
2.39	4650	525	-	-	2200	9810	02	6120DB	Y		731	AV	A-140	A-190	A-224
	5570	630	-	-	2200	9810	02	6125DB	Y		731	AV	A-140	A-190	A-224
	6350	718	1.09	I	3300	14700	02	6130DC	Y	A	731	-	A-142	A-192	A-226
			1.31	II	3300	14700	02	6135DC	Y	B	731	-	A-142	A-192	A-226
			1.91	III	3590	16000	02	6145DB	Y	C	731	AV	A-142	A-192	A-226
2.08	4600	520	-	-	2200	9810	02	6120DB	Y		841	AV	A-140	A-190	A-224
	5570	630	-	-	2200	9810	02	6125DB	Y		841	AV	A-140	A-190	A-224
	6900	780	-	-	3300	14700	02	6130DC	Y		841	-	A-142	A-192	A-226
	7310	826	1.14	I	3300	14700	02	6135DC	Y	A	841	-	A-142	A-192	A-226
			1.48	II	3590	16000	02	6140DB	Y	B	841	AV	A-142	A-192	A-226
			1.66	III	3590	16000	02	6145DB	Y	C	841	AV	A-142	A-192	A-226
1.74	4650	525	-	-	2200	9810	02	6120DB	Y		1003	AV	A-140	A-190	A-224
	5570	630	-	-	2200	9810	02	6125DB	Y		1003	AV	A-140	A-190	A-224
	8070	912	-	-	3300	14700	02	6130DC	Y		1003	-	A-142	A-192	A-226
	8720	985	1.07	I	3300	14700	02	6135DC	Y	A	1003	-	A-142	A-192	A-226
			1.39	II	3590	16000	02	6145DB	Y	B	1003	AV	A-142	A-192	A-226
1.40	5570	630	-	-	2200	9810	02	6125DB	Y		1247	AV	A-140	A-190	A-224
	6900	780	-	-	3300	14700	02	6130DC	Y		1247	-	A-142	A-192	A-226
	8320	940	-	-	3300	14700	02	6135DC	Y		1247	-	A-142	A-192	A-226
	10900	1230	1.00	I	3590	16000	02	6140DB	Y	A	1247	AV	A-142	A-192	A-226
			1.12	I	3590	16000	02	6145DB	Y	A	1247	AV	A-142	A-192	A-226
1.18	7500	848	-	-	3300	14700	02	6130DC	Y		1479	-	A-142	A-192	A-226
	8660	979	-	-	3300	14700	02	6135DC	Y		1479	-	A-142	A-192	A-226
	10900	1230	-	-	3590	16000	02	6140DB	Y		1479	AV	A-142	A-192	A-226
	11100	1250	-	-	3590	16000	02	6145DB	Y		1479	AV	A-142	A-192	A-226
0.946	6900	780	-	-	3300	14700	02	6130DC	Y		1849	-	A-142	A-192	A-226
	8320	940	-	-	3300	14700	02	6135DC	Y		1849	-	A-142	A-192	A-226
	10900	1230	-	-	3590	16000	02	6140DB	Y		1849	AV	A-142	A-192	A-226
	12100	1370	-	-	3530	15700	02	6145DB	Y		1849	AV	A-142	A-192	A-226

Notes: [1] Refer to Technical Information Section for R1 and R2 model Overhung Load information.
[2] CNHM, CHHM, CNFM, CHFM, CNVM, CVVM are type designations, see page A-3.
[3] For Inverter Duty, single reduction, see pages A-154~163; double reduction, see pages A-164~175. For Single Phase, see page A-244.
[4] For Single Phase, see page A-245.
[5] For type CVFM, single reduction, see page A-219; double reduction, see page A-240.

SELECTION TABLES – 60 Hz

1/4 HP, 0.2 kW, 60 Hz, 1750 RPM

Output Speed	Output Torque		Service Factor		Overhung Load[1]		Selection					Option	Dimension Page[2]		
RPM	in•lb	N•m	SF	AGMA Class	lb	N	HP Symbol	Frame Size	Shaft Spec.	AGMA Class	Ratio	Inverter Duty	CNHM CHHM[3]	CNVM CVVM[4]	CNFM CHFM[5]
0.847	8070	912	-	-	3300	14700	02	6130DC	Y		2065	-	A-142	A-192	A-226
	9290	1050	-	-	3300	14700	02	6135DC	Y		2065	-	A-142	A-192	A-226
	10900	1230	-	-	3590	16000	02	6140DB	Y		2065	AV	A-142	A-192	A-226
	12100	1370	-	-	3590	16000	02	6145DB	Y		2065	AV	A-142	A-192	A-226
0.690	8070	912	-	-	3300	14700	02	6130DC	Y		2537	-	A-142	A-192	A-226
	9290	1050	-	-	3300	14700	02	6135DC	Y		2537	-	A-142	A-192	A-226
	10900	1230	-	-	3590	16000	02	6140DB	Y		2537	AV	A-142	A-192	A-226
	12100	1370	-	-	3590	16000	02	6145DB	Y		2537	AV	A-142	A-192	A-226
0.575	7500	848	-	-	3300	14700	02	6130DC	Y		3045	-	A-142	A-192	A-226
	8660	979	-	-	3300	14700	02	6135DC	Y		3045	-	A-142	A-192	A-226
	10900	1230	-	-	3590	16000	02	6140DB	Y		3045	AV	A-142	A-192	A-226
	11100	1250	-	-	3590	16000	02	6145DB	Y		3045	AV	A-142	A-192	A-226
0.503	8070	912	-	-	3300	14700	02	6130DC	Y		3481	-	A-142	A-192	A-226
	9290	1050	-	-	3300	14700	02	6135DC	Y		3481	-	A-142	A-192	A-226
	10900	1230	-	-	3590	16000	02	6140DB	Y		3481	AV	A-142	A-192	A-226
	12100	1370	-	-	3590	16000	02	6145DB	Y		3481	AV	A-142	A-192	A-226
0.394	7500	848	-	-	3300	14700	02	6130DC	Y		4437	-	A-142	A-192	A-226
	8660	979	-	-	3300	14700	02	6135DC	Y		4437	-	A-142	A-192	A-226
	10900	1230	-	-	3590	16000	02	6140DB	Y		4437	AV	A-142	A-192	A-226
	11100	1250	-	-	3590	16000	02	6145DB	Y		4437	AV	A-142	A-192	A-226
0.341	7500	848	-	-	3300	14700	02	6130DC	Y		5133	-	A-142	A-192	A-226
	8660	979	-	-	3300	14700	02	6135DC	Y		5133	-	A-142	A-192	A-226
	10900	1230	-	-	3590	16000	02	6140DB	Y		5133	AV	A-142	A-192	A-226
	11100	1250	-	-	3590	16000	02	6145DB	Y		5133	AV	A-142	A-192	A-226
0.283	7500	848	-	-	3300	14700	02	6130DC	Y		6177	-	A-142	A-192	A-226
	8660	979	-	-	3300	14700	02	6135DC	Y		6177	-	A-142	A-192	A-226
	10900	1230	-	-	3590	16000	02	6140DB	Y		6177	AV	A-142	A-192	A-226
	11100	1250	-	-	3590	16000	02	6145DB	Y		6177	AV	A-142	A-192	A-226
0.231	7500	848	-	-	3300	14700	02	6130DC	Y		7569	-	A-142	A-192	A-226
	8660	979	-	-	3300	14700	02	6135DC	Y		7569	-	A-142	A-192	A-226
	10900	1230	-	-	3590	16000	02	6140DB	Y		7569	AV	A-142	A-192	A-226
	11100	1250	-	-	3590	16000	02	6145DB	Y		7569	AV	A-142	A-192	A-226

1/3 HP, 0.25 kW, 60 Hz, 1750 RPM

Output Speed	Output Torque		Service Factor		Overhung Load[1]		Selection					Option	Dimension Page[2]		
RPM	in•lb	N•m	SF	AGMA Class	lb	N	HP Symbol	Frame Size	Shaft Spec.	AGMA Class	Ratio	Inverter Duty	CNHM CHHM[3]	CNVM CVVM[4]	CNFM CHFM[5]
292	68.8	7.78	1.14	I	168	749	03	6065	Y	A	6	-	A-122	A-176	A-204
			1.39	II	294	1310	03	6070	Y	B	6	AV	A-122	A-176	A-204
			1.63	III	294	1310	03	6075	Y	C	6	AV	A-122	A-176	A-204
			2.37	III	406	1810	03	6080	Y	C	6	AV	A-122	A-176	A-204
219	92.0	10.4	1.14	I	192	855	03	6065	Y	A	8	-	A-122	A-176	A-204
			1.39	II	326	1450	03	6070	Y	B	8	AV	A-122	A-176	A-204
			1.63	III	326	1450	03	6075	Y	C	8	AV	A-122	A-176	A-204
			2.37	III	442	1970	03	6080	Y	C	8	AV	A-122	A-176	A-204

Notes: [1] Refer to Technical Information Section for R1 and R2 model Overhung Load information.
[2] CNHM, CHHM, CNFM, CHFM, CNVM, CVVM are type designations, see page A-3.
[3] For Inverter Duty, single reduction, see pages A-154~163; double reduction, see pages A-164~175. For Single Phase, see page A-244.
[4] For Single Phase, see page A-245.
[5] For type CVFM, single reduction, see page A-219; double reduction, see page A-240.

1/3 HP, 0.25 kW, 60 Hz, 1750 RPM

Output Speed	Output Torque		Service Factor		Overhung Load[1]		Selection					Option	Dimension Page[2]		
RPM	in•lb	N•m	SF	AGMA Class	lb	N	HP Symbol	Frame Size	Shaft Spec.	AGMA Class	Ratio	Inverter Duty	CNHM CHHM[3]	CNVM CVVM[4]	CNFM CHFM[5]
159	127	14.3	1.14	I	260	1160	03	6065	Y	A	11	-	A-122	A-176	A-204
			1.39	II	364	1620	03	6070	Y	B	11	AV	A-122	A-176	A-204
			1.63	III	364	1620	03	6075	Y	C	11	AV	A-122	A-176	A-204
			2.37	III	489	2180	03	6080	Y	C	11	AV	A-122	A-176	A-204
135	149	16.8	1.14	I	265	1180	03	6065	Y	A	13	-	A-122	A-176	A-204
			1.39	II	384	1710	03	6070	Y	B	13	AV	A-122	A-176	A-204
			1.63	III	384	1710	03	6075	Y	C	13	AV	A-122	A-176	A-204
			2.37	III	525	2340	03	6080	Y	C	13	AV	A-122	A-176	A-204
117	172	19.4	1.14	I	265	1180	03	6065	Y	A	15	-	A-122	A-176	A-204
			1.39	II	386	1720	03	6070	Y	B	15	AV	A-122	A-176	A-204
			1.63	III	386	1720	03	6075	Y	C	15	AV	A-122	A-176	A-204
			2.37	III	543	2420	03	6080	Y	C	15	AV	A-122	A-176	A-204
103	195	22.0	1.14	I	265	1180	03	6065	Y	A	17	-	A-122	A-176	A-204
			1.39	II	397	1770	03	6070	Y	B	17	AV	A-122	A-176	A-204
			1.63	III	397	1770	03	6075	Y	C	17	AV	A-122	A-176	A-204
			2.37	III	570	2540	03	6080	Y	C	17	AV	A-122	A-176	A-204
83.3	241	27.2	0.94	-	265	1180	03	6065	Y		21	-	A-122	A-176	A-204
			1.28	I	397	1770	03	6070	Y	A	21	AV	A-122	A-176	A-204
			1.63	III	397	1770	03	6075	Y	C	21	AV	A-122	A-176	A-204
			1.91	III	555	2470	03	6080	Y	C	21	AV	A-122	A-176	A-204
70.0	287	32.4	1.18	I	397	1770	03	6075	Y	A	25	AV	A-122	A-176	A-204
			1.36	II	570	2540	03	6080	Y	B	25	AV	A-122	A-176	A-204
			1.90	III	570	2540	03	6085	Y	C	25	AV	A-122	A-176	A-204
60.3	333	37.6	1.14	I	397	1770	03	6075	Y	A	29	AV	A-122	A-176	A-204
			1.36	II	575	2560	03	6080	Y	B	29	AV	A-122	A-176	A-204
			1.87	III	575	2560	03	6085	Y	C	29	AV	A-122	A-176	A-204
50.0	402	45.4	1.12	I	397	1770	03	6075	Y	A	35	AV	A-122	A-176	A-204
			1.31	II	575	2560	03	6080	Y	B	35	AV	A-122	A-176	A-204
			1.48	II	575	2560	03	6085	Y	B	35	AV	A-122	A-176	A-204
			2.45	III	750	3340	03	6090	Y	C	35	AV	A-122	A-176	A-204
40.7	493	55.7	0.90	-	391	1740	03	6075	Y		43	AV	A-122	A-176	A-204
			1.18	I	575	2560	03	6085	Y	A	43	AV	A-122	A-176	A-204
			1.74	III	750	3340	03	6090	Y	C	43	AV	A-122	A-176	A-204
			2.41	III	750	3340	03	6095	Y	C	43	AV	A-122	A-176	A-204
34.3	585	66.1	0.96	-	575	2560	03	6085	Y		51	AV	A-122	A-176	A-204
			1.33	II	750	3340	03	6090	Y	B	51	AV	A-122	A-176	A-204
			1.69	III	750	3340	03	6095	Y	C	51	AV	A-122	A-176	A-204
			2.24	III	1210	5400	03	6100	Y	C	51	AV	A-122	A-176	A-204
29.7	677	76.5	0.94	-	570	2540	03	6085	Y		59	AV	A-122	A-176	A-204
			1.24	I	750	3340	03	6090	Y	A	59	AV	A-122	A-176	A-204
			1.49	II	750	3340	03	6095	Y	B	59	AV	A-122	A-176	A-204
			2.06	III	1210	5400	03	6100	Y	C	59	AV	A-122	A-176	A-204
24.6	814	92.0	1.20	I	750	3340	03	6095	Y	A	71	AV	A-122	A-176	A-204
			1.74	III	1210	5400	03	6100	Y	C	71	AV	A-122	A-176	A-204
			2.24	III	1210	5400	03	6105	Y	C	71	AV	A-122	A-176	A-204
20.1	1000	113	1.20	I	750	3340	03	6095	Y	A	87	AV	A-122	A-176	A-204
			1.73	III	1210	5400	03	6100	Y	C	87	AV	A-122	A-176	A-204
			2.26	III	1210	5400	03	6105	Y	C	87	AV	A-122	A-176	A-204

Notes: [1] Refer to Technical Information Section for R1 and R2 model Overhung Load information.
[2] CNHM, CHHM, CNFM, CHFM, CNVM, CVVM are type designations, see page A-3.
[3] For Inverter Duty, single reduction, see pages A-154~163; double reduction, see pages A-164~175. For Single Phase, see page A-244.
[4] For Single Phase, see page A-245.
[5] For type CVFM, single reduction, see page A-219; double reduction, see page A-240.

SELECTION TABLES – 60 Hz

1/3 HP, 0.25 kW, 60 Hz, 1750 RPM

Output Speed	Output Torque		Service Factor		Overhung Load[1]		Selection					Option	Dimension Page[2]		
RPM	in•lb	N•m	SF	AGMA Class	lb	N	HP Symbol	Frame Size	Shaft Spec.	AGMA Class	Ratio	Inverter Duty	CNHM CHHM[3]	CNVM CVVM[4]	CNFM CHFM[5]
16.8	1130	128	1.17	I	750	3340	03	6090DA	Y	A	104	AV	A-140	A-190	A-224
			1.42	II	750	3340	03	6095DA	Y	B	104	AV	A-140	A-190	A-224
			1.72	III	1210	5400	03	6105DA	Y	C	104	AV	A-140	A-190	A-224
			4.11	III	2200	9810	03	6120DB	Y	C	104	AV	A-140	A-190	A-224
14.7	1360	154	1.14	I	1210	5400	03	6105	Y	A	119	AV	A-122	A-176	A-204
14.5	1320	149	1.08	I	750	3340	03	6095DA	Y	A	121	AV	A-140	A-190	A-224
			1.68	III	1210	5400	03	6100DA	Y	C	121	AV	A-140	A-190	A-224
			1.72	III	1210	5400	03	6105DA	Y	C	121	AV	A-140	A-190	A-224
			3.53	III	2200	9810	03	6120DB	Y	C	121	AV	A-140	A-190	A-224
12.2	1330	150	-	-	750	3340	03	6090DA	Y		143	AV	A-140	A-190	A-224
	1560	176	1.04	I	750	3340	03	6095DA	Y	A	143	AV	A-140	A-190	A-224
			1.42	II	1210	5400	03	6100DA	Y	B	143	AV	A-140	A-190	A-224
			1.71	III	1210	5400	03	6105DA	Y	C	143	AV	A-140	A-190	A-224
			2.99	III	2200	9810	03	6120DB	Y	C	143	AV	A-140	A-190	A-224
10.6	1800	203	0.98	-	750	3340	03	6095DA	Y		165	AV	A-140	A-190	A-224
			1.23	I	1210	5400	03	6100DA	Y	A	165	AV	A-140	A-190	A-224
			1.48	II	1210	5400	03	6105DA	Y	B	165	AV	A-140	A-190	A-224
			2.59	III	2200	9810	03	6120DB	Y	C	165	AV	A-140	A-190	A-224
8.97	1770	200	-	-	750	3340	03	6095DA	Y		195	AV	A-140	A-190	A-224
	2110	239	1.25	I	1210	5400	03	6105DA	Y	A	195	AV	A-140	A-190	A-224
			2.19	III	2200	9810	03	6120DB	Y	C	195	AV	A-140	A-190	A-224
7.58	2210	250	-	-	1210	5400	03	6100DA	Y		231	AV	A-140	A-190	A-224
	2510	284	1.06	I	1210	5400	03	6105DA	Y	A	231	AV	A-140	A-190	A-224
			1.84	III	2200	9810	03	6120DB	Y	C	231	AV	A-140	A-190	A-224
			2.22	III	2200	9810	03	6125DB	Y	C	231	AV	A-140	A-190	A-224
6.41	2650	300	-	-	1210	5400	03	6105DA	Y		273	AV	A-140	A-190	A-224
	2960	335	1.56	II	2200	9810	03	6120DB	Y	B	273	AV	A-140	A-190	A-224
			1.88	III	2200	9810	03	6125DB	Y	C	273	AV	A-140	A-190	A-224
			2.33	III	3300	14700	03	6130DC	Y	C	273	-	A-142	A-192	A-226
5.49	2650	300	-	-	1210	5400	03	6105DA	Y	C	319	AV	A-140	A-190	A-224
	3470	392	1.33	II	2200	9810	03	6120DB	Y	B	319	AV	A-140	A-190	A-224
			1.61	III	2200	9810	03	6125DB	Y	C	319	AV	A-140	A-190	A-224
			1.99	III	3300	14700	03	6130DC	Y	C	319	-	A-142	A-192	A-226
			2.40	III	3300	14700	03	6135DC	Y	C	319	-	A-142	A-192	A-226
4.64	4100	463	1.12	I	2200	9810	03	6120DB	Y	A	377	AV	A-140	A-190	A-224
			1.36	II	2200	9810	03	6125DB	Y	B	377	AV	A-140	A-190	A-224
			1.69	III	3300	14700	03	6130DC	Y	C	377	-	A-142	A-192	A-226
			2.03	III	3300	14700	03	6135DC	Y	C	377	-	A-142	A-192	A-226
			2.66	III	3590	16000	03	6140DB	Y	C	377	AV	A-142	A-192	A-226
3.70	4650	525	-	-	2200	9810	03	6120DB	Y		473	AV	A-140	A-190	A-224
	5140	581	1.08	I	2200	9810	03	6125DB	Y	A	473	AV	A-140	A-190	A-224
			1.34	II	3300	14700	03	6130DC	Y	B	473	-	A-142	A-192	A-226
			1.62	III	3300	14700	03	6135DC	Y	C	473	-	A-142	A-192	A-226
			2.11	III	3590	16000	03	6140DB	Y	C	473	AV	A-142	A-192	A-226
3.13	5570	630	-	-	2200	9810	03	6125DB	Y		559	AV	A-140	A-190	A-224
	6070	686	1.14	I	3300	14700	03	6130DC	Y	A	559	-	A-142	A-192	A-22
			1.37	II	3300	14700	03	6135DC	Y	B	559	-	A-142	A-192	A-22
			1.79	III	3590	16000	03	6140DB	Y	C	559	AV	A-142	A-192	A-22
			2.00	III	3590	16000	03	6145DB	Y	C	559	AV	A-142	A-192	A-22

Notes: [1] Refer to Technical Information Section for R1 and R2 model Overhung Load information.
[2] CNHM, CHHM, CNFM, CHFM, CNVM, CVVM are type designations, see page A-3.
[3] For Inverter Duty, single reduction, see pages A-154~163; double reduction, see pages A-164~175. For Single Phase, see page A-244.
[4] For Single Phase, see page A-245.
[5] For type CVFM, single reduction, see page A-219; double reduction, see page A-240.

1/3 HP, 0.25 kW, 60 Hz, 1750 RPM

Output Speed	Output Torque		Service Factor		Overhung Load[1]		Selection					Option	Dimension Page[2]		
RPM	in•lb	N•m	SF	AGMA Class	lb	N	HP Symbol	Frame Size	Shaft Spec.	AGMA Class	Ratio	Inverter Duty	CNHM CHHM[3]	CNVM CVVM[4]	CNFM CHFM[5]
2.70	7050	797	1.14	I	3300	14700	03	6130DC	Y	A	649	-	A-142	A-192	A-226
			1.32	II	3300	14700	03	6135DC	Y	B	649	-	A-142	A-192	A-226
			1.72	III	3590	16000	03	6145DB	Y	C	649	AV	A-142	A-192	A-226
2.39	6900	780	-	-	3300	14700	03	6130DC	Y		731	-	A-142	A-192	A-226
	7950	898	1.05	I	3300	14700	03	6135DC	Y	A	731	-	A-142	A-192	A-226
			1.53	II	3590	16000	03	6145DB	Y	B	731	AV	A-142	A-192	A-226
2.08	8320	940	-	-	3300	14700	03	6135DC	Y		841	-	A-142	A-192	A-226
	9110	1030	1.21	I	3590	16000	03	6145DB	Y	A	841	AV	A-142	A-192	A-226
1.74	9290	1050	-	-	3300	14700	03	6135DC	Y		1003	-	A-142	A-192	A-226
	10900	1230	1.00	I	3590	16000	03	6140DB	Y	A	1003	AV	A-142	A-192	A-226
			1.11	I	3590	16000	03	6145DB	Y	A	1003	AV	A-142	A-192	A-226
1.40	12100	1370	-	-	3530	15700	03	6145DB	Y		1247	AV	A-142	A-192	A-226

1/2 HP, 0.4 kW, 60 Hz, 1750 RPM

Output Speed	Output Torque		Service Factor		Overhung Load[1]		Selection					Option	Dimension Page[2]		
RPM	in•lb	N•m	SF	AGMA Class	lb	N	HP Symbol	Frame Size	Shaft Spec.	AGMA Class	Ratio	Inverter Duty	CNHM CHHM[3]	CNVM CVVM[4]	CNFM CHFM[5]
292	110	12.4	1.02	I	290	1290	05	6075	Y	A	6	-	A-122	A-176	A-204
			1.48	II	406	1810	05	6080	Y	B	6	AV	A-122	A-176	A-204
			1.95	III	406	1810	05	6085	Y	C	6	AV	A-122	A-176	A-204
219	147	16.6	1.02	I	321	1430	05	6075	Y	A	8	-	A-122	A-176	A-204
			1.48	II	440	1960	05	6080	Y	B	8	AV	A-122	A-176	A-204
			1.95	III	440	1960	05	6085	Y	C	8	AV	A-122	A-176	A-204
159	202	22.8	1.02	I	357	1590	05	6075	Y	A	11	-	A-122	A-176	A-204
			1.48	II	485	2160	05	6080	Y	B	11	AV	A-122	A-176	A-204
			1.95	III	485	2160	05	6085	Y	C	11	AV	A-122	A-176	A-204
135	239	27.0	1.02	I	377	1680	05	6075	Y	A	13	-	A-122	A-176	A-204
			1.48	II	521	2320	05	6080	Y	B	13	AV	A-122	A-176	A-204
			1.95	III	521	2320	05	6085	Y	C	13	AV	A-122	A-176	A-204
117	275	31.1	1.02	I	377	1680	05	6075	Y	A	15	-	A-122	A-176	A-204
			1.48	II	539	2400	05	6080	Y	B	15	AV	A-122	A-176	A-204
			1.95	III	539	2400	05	6085	Y	C	15	AV	A-122	A-176	A-204
103	312	35.3	1.02	I	397	1770	05	6075	Y	A	17	-	A-122	A-176	A-204
			1.48	II	564	2510	05	6080	Y	B	17	AV	A-122	A-176	A-204
			1.95	III	564	2510	05	6085	Y	C	17	AV	A-122	A-176	A-204
83.3	385	43.5	1.02	I	397	1770	05	6075	Y	A	21	-	A-122	A-176	A-204
			1.38	II	550	2450	05	6085	Y	B	21	AV	A-122	A-176	A-204
			1.90	III	750	3340	05	6090	Y	C	21	AV	A-122	A-176	A-204
70.0	458	51.8	1.19	I	566	2520	05	6085	Y	A	25	AV	A-122	A-176	A-204
			1.68	III	750	3340	05	6090	Y	C	25	AV	A-122	A-176	A-204
			2.17	III	750	3340	05	6095	Y	C	25	AV	A-122	A-176	A-204
60.3	532	60.1	1.17	I	575	2560	05	6085	Y	A	29	AV	A-122	A-176	A-204
			1.56	II	750	3340	05	6090	Y	B	29	AV	A-122	A-176	A-204
			1.96	III	750	3340	05	6095	Y	C	29	AV	A-122	A-176	A-204
50.0	642	72.6	0.93	-	575	2560	05	6085	Y		35	AV	A-122	A-176	A-204
			1.53	II	750	3340	05	6090	Y	B	35	AV	A-122	A-176	A-204
			1.90	III	750	3340	05	6095	Y	C	35	AV	A-122	A-176	A-204

Notes: [1] Refer to Technical Information Section for R1 and R2 model Overhung Load information.
[2] CNHM, CHHM, CNFM, CHFM, CNVM, CVVM are type designations, see page A-3.
[3] For Inverter Duty, single reduction, see pages A-154~163; double reduction, see pages A-164~175. For Single Phase, see page A-244.
[4] For Single Phase, see page A-245.
[5] For type CVFM, single reduction, see page A-219; double reduction, see page A-240.

SELECTION TABLES – 60 Hz

1/2 HP, 0.4 kW, 60 Hz, 1750 RPM

Output Speed	Output Torque		Service Factor		Overhung Load[1]		Selection					Option	Dimension Page[2]		
RPM	in•lb	N•m	SF	AGMA Class	lb	N	HP Symbol	Frame Size	Shaft Spec.	AGMA Class	Ratio	Inverter Duty	CNHM CHHM[3]	CNVM CVVM[4]	CNFM CHFM[5]
40.7	789	89.2	1.09	I	750	3340	05	6090	Y	A	43	AV	A-122	A-176	A-204
			1.51	II	750	3340	05	6095	Y	B	43	AV	A-122	A-176	A-204
			1.95	III	1210	5400	05	6100	Y	C	43	AV	A-122	A-176	A-204
34.3	938	106	1.06	I	750	3340	05	6095	Y	A	51	AV	A-122	A-176	A-204
			1.40	II	1210	5400	05	6100	Y	B	51	AV	A-122	A-176	A-204
			1.94	III	1210	5400	05	6105	Y	C	51	AV	A-122	A-176	A-204
29.7	1080	122	0.93	-	750	3340	05	6095	Y		59	AV	A-122	A-176	A-204
			1.29	I	1210	5400	05	6100	Y	A	59	AV	A-122	A-176	A-204
			1.77	III	1210	5400	05	6105	Y	C	59	AV	A-122	A-176	A-204
			2.15	III	1710	7610	05	6110	Y	C	59	AV	A-126	A-176	A-204
24.6	1300	147	1.09	I	1210	5400	05	6100	Y	A	71	AV	A-122	A-176	A-204
			1.40	II	1210	5400	05	6105	Y	B	71	AV	A-122	A-176	A-204
			1.67	III	1710	7610	05	6110	Y	C	71	AV	A-126	A-176	A-204
			1.90	III	1710	7610	05	6115	Y	C	71	AV	A-126	A-176	A-204
20.1	1590	180	1.08	I	1210	5400	05	6100	Y	A	87	AV	A-122	A-176	A-204
			1.41	II	1210	5400	05	6105	Y	B	87	AV	A-122	A-176	A-204
			1.65	III	1710	7610	05	6110	Y	C	87	AV	A-126	A-176	A-204
			1.90	III	1710	7610	05	6115	Y	C	87	AV	A-126	A-176	A-204
16.8	1330	150	-	-	750	3340	05	6090DA	Y		104	-	A-140	A-190	A-224
	1600	181	-	-	750	3340	05	6095DA	Y		104	-	A-140	A-190	A-224
	1800	204	1.07	I	1210	5400	05	6105DA	Y	A	104	-	A-140	A-190	A-224
			2.57	III	2200	9810	05	6120DB	Y	C	104	AV	A-140	A-190	A-224
14.5	1330	150	-	-	750	3340	05	6090DA	Y		121	-	A-140	A-190	A-224
	1420	160	-	-	750	3340	05	6095DA	Y		121	-	A-140	A-190	A-224
	2110	238	1.07	I	1210	5400	05	6105DA	Y	A	121	-	A-140	A-190	A-224
			2.21	III	2200	9810	05	6120DB	Y	C	121	AV	A-140	A-190	A-224
12.2	1620	183	-	-	750	3340	05	6095DA	Y		143	-	A-140	A-190	A-224
	2210	250	-	-	1210	5400	05	6100DA	Y		143	-	A-140	A-190	A-224
	2490	281	1.07	I	1210	5400	05	6105DA	Y	A	143	-	A-140	A-190	A-224
			1.87	III	2200	9810	05	6120DB	Y	C	143	AV	A-140	A-190	A-224
			2.24	III	2200	9810	05	6125DB	Y	C	143	AV	A-140	A-190	A-224
10.6	2210	250	-	-	1210	5400	05	6100DA	Y		165	-	A-140	A-190	A-224
	2650	300	-	-	1210	5400	05	6105DA	Y		165	-	A-140	A-190	A-224
	2870	324	1.62	III	2200	9810	05	6120DB	Y	C	165	AV	A-140	A-190	A-224
			1.94	III	2200	9810	05	6125DB	Y	C	165	AV	A-140	A-190	A-224
			2.41	III	3300	14700	05	6130DC	Y	C	165	-	A-142	A-192	A-222
8.97	2210	250	-	-	1210	5400	05	6100DA	Y		195	-	A-140	A-190	A-224
	2650	300	-	-	1210	5400	05	6105DA	Y		195	-	A-140	A-190	A-224
	3390	383	1.37	II	2200	9810	05	6120DB	Y	B	195	AV	A-140	A-190	A-224
			1.64	III	2200	9810	05	6125DB	Y	C	195	AV	A-140	A-190	A-224
			2.04	III	3300	14700	05	6130DC	Y	C	195	-	A-142	A-192	A-226
			2.45	III	3300	14700	05	6135DC	Y	C	195	-	A-142	A-192	A-226
7.58	2650	300	-	-	1210	5400	05	6105DA	Y		231	-	A-140	A-190	A-224
	4020	454	1.15	I	2200	9810	05	6120DB	Y	A	231	AV	A-140	A-190	A-224
			1.39	II	2200	9810	05	6125DB	Y	B	231	AV	A-140	A-190	A-224
			1.72	III	3300	14700	05	6130DC	Y	C	231	-	A-142	A-192	A-226
			2.07	III	3300	14700	05	6135DC	Y	C	231	-	A-142	A-192	A-226
			2.70	III	3590	16000	05	6140DB	Y	C	231	AV	A-142	A-192	A-226

Notes: [1] Refer to Technical Information Section for R1 and R2 model Overhung Load information.
[2] CNHM, CHHM, CNFM, CHFM, CNVM, CVVM are type designations, see page A-3.
[3] For Inverter Duty, single reduction, see pages A-154~163; double reduction, see pages A-164~175. For Single Phase, see page A-244.
[4] For Single Phase, see page A-245.
[5] For type CVFM, single reduction, see page A-219; double reduction, see page A-240.

1/2 HP, 0.4 kW, 60 Hz, 1750 RPM

Output Speed	Output Torque		Service Factor		Overhung Load[1]		Selection					Option	Dimension Page[2]		
RPM	in•lb	N•m	SF	AGMA Class	lb	N	HP Symbol	Frame Size	Shaft Spec.	AGMA Class	Ratio	Inverter Duty	CNHM CHHM[3]	CNVM CVVM[4]	CNFM CHFM[5]
6.41	4620	522	-	-	2200	9810	05	6120DB	Y		273	AV	A-140	A-190	A-224
	4740	536	1.18	I	2200	9810	05	6125DB	Y	A	273	AV	A-140	A-190	A-224
			1.46	II	3300	14700	05	6130DC	Y	B	273	-	A-142	A-192	A-226
			1.75	III	3300	14700	05	6135DC	Y	C	273	-	A-142	A-192	A-226
			2.28	III	3590	16000	05	6140DB	Y	C	273	AV	A-142	A-192	A-226
5.49	4600	520	-	-	2200	9810	05	6120DB	Y		319	AV	A-140	A-190	A-224
	5550	627	1.00	I	2200	9810	05	6125DB	Y	A	319	AV	A-140	A-190	A-224
			1.24	I	3300	14700	05	6130DC	Y	A	319	-	A-142	A-192	A-226
			1.50	II	3300	14700	05	6135DC	Y	B	319	-	A-142	A-192	A-226
			1.95	III	3590	16000	05	6140DB	Y	C	319	AV	A-142	A-192	A-226
			2.19	III	3590	16000	05	6145DB	Y	C	319	AV	A-142	A-192	A-226
4.64	4600	520	-	-	2200	9810	05	6120DB	Y		377	AV	A-140	A-190	A-224
	5570	630	-	-	2200	9810	05	6125DB	Y		377	AV	A-140	A-190	A-224
	6560	741	1.05	I	3300	14700	05	6130DC	Y	A	377	-	A-142	A-192	A-226
			1.27	I	3300	14700	05	6135DC	Y	A	377	-	A-142	A-192	A-226
			1.66	III	3590	16000	05	6140DB	Y	C	377	AV	A-142	A-192	A-226
			1.85	III	3590	16000	05	6145DB	Y	C	377	AV	A-142	A-192	A-226
3.70	5570	630	-	-	2200	9810	05	6125DB	Y		473	AV	A-140	A-190	A-224
	6900	780	-	-	3300	14700	05	6130DC	Y		473	-	A-142	A-192	A-226
	8220	929	1.01	I	3300	14700	05	6135DC	Y	A	473	-	A-142	A-192	A-226
			1.32	II	3590	16000	05	6140DB	Y	B	473	AV	A-142	A-192	A-226
			1.47	II	3590	16000	05	6145DB	Y	B	473	AV	A-142	A-192	A-226
			1.87	III	4960	22100	05	6160DC	Y	C	473	-	A-142	A-192	A-228
3.13	6900	780	-	-	3300	14700	05	6130DC	Y		559	-	A-142	A-192	A-226
	8320	940	-	-	3300	14700	05	6135DC	Y		559	-	A-142	A-192	A-226
	9730	1100	1.12	I	3590	16000	05	6140DB	Y	A	559	AV	A-142	A-192	A-226
			1.25	I	3590	16000	05	6145DB	Y	A	559	AV	A-142	A-192	A-226
			1.58	II	4960	22100	05	6160DC	Y	B	559	-	A-142	A-192	A-228
			1.91	III	4960	22100	05	6165DC	Y	C	559	-	A-142	A-192	A-228
2.70	8070	912	-	-	3300	14700	05	6130DC	Y		649	-	A-142	A-192	A-226
	9290	1050	-	-	3300	14700	05	6135DC	Y		649	-	A-142	A-192	A-226
	10900	1230	-	-	3590	16000	05	6140DB	Y		649	AV	A-142	A-192	A-226
	11300	1280	1.07	I	3590	16000	05	6145DB	Y	A	649	AV	A-142	A-192	A-226
			1.38	II	4960	22100	05	6160DC	Y	B	649	-	A-142	A-192	A-228
			1.64	III	4960	22100	05	6165DC	Y	C	649	-	A-142	A-192	A-228
2.39	8320	940	-	-	3300	14700	05	6135DC	Y		731	AV	A-142	A-192	A-226
	10900	1230	-	-	3590	16000	05	6140DB	Y		731	AV	A-142	A-192	A-226
	12700	1440	0.95	-	3530	15700	05	6145DB	Y		731	AV	A-142	A-192	A-226
			1.21	I	4960	22100	05	6160DC	Y	A	731	-	A-142	A-192	A-228
			1.46	II	4960	22100	05	6165DC	Y	B	731	-	A-142	A-192	A-228
			1.76	III	6620	29500	05	6170DC	Y	C	731	-	A-142	A-192	A-228
2.08	10900	1230	-	-	3592	16000	05	6140DB	Y		841	AV	A-142	A-192	A-226
	12100	1370	-	-	3548	15800	05	6145DB	Y		841	AV	A-142	A-192	A-226
	14600	1650	1.07	I	4962	22100	05	6160DC	Y	A	841	-	A-142	A-192	A-228
			1.27	I	4962	22100	05	6165DC	Y	A	841	-	A-142	A-192	A-228
			1.53	II	6624	29500	05	6170DC	Y	B	841	-	A-142	A-192	A-228
			1.91	III	6624	29500	05	6175DC	Y	C	841	-	A-142	A-192	A-228

Notes: [1] Refer to Technical Information Section for R1 and R2 model Overhung Load information.
[2] CNHM, CHHM, CNFM, CHFM, CNVM, CVVM are type designations, see page A-3.
[3] For Inverter Duty, single reduction, see pages A-154~163; double reduction, see pages A-164~175. For Single Phase, see page A-244.
[4] For Single Phase, see page A-245.
[5] For type CVFM, single reduction, see page A-219; double reduction, see page A-240.

SELECTION TABLES – 60 Hz

1/2 HP, 0.4 kW, 60 Hz, 1750 RPM

Output Speed	Output Torque		Service Factor		Overhung Load[1]		Selection					Option	Dimension Page[2]		
RPM	in•lb	N•m	SF	AGMA Class	lb	N	HP Symbol	Frame Size	Shaft Spec.	AGMA Class	Ratio	Inverter Duty	CNHM CHHM[3]	CNVM CVVM[4]	CNFM CHFM[5]
1.74	12100	1370	-	-	3592	16000	05	6145DB	Y		1003	AV	A-142	A-192	A-226
	15600	1760	-	-	4962	22100	05	6160DC	Y		1003	-	A-142	A-192	A-228
	17400	1970	1.07	I	4962	22100	05	6165DC	Y	A	1003	-	A-142	A-192	A-228
			1.28	I	6624	29500	05	6170DC	Y	A	1003	-	A-142	A-192	A-228
			1.60	III	6624	29500	05	6175DC	Y	C	1003	-	A-142	A-192	A-228
1.40	15400	1740	-	-	4962	22100	05	6160DC	Y		1247	-	A-142	A-192	A-228
	18600	2100	-	-	4962	22100	05	6165DC	Y		1247	-	A-142	A-192	A-228
	21700	2450	1.03	I	6624	29500	05	6170DC	Y	A	1247	-	A-142	A-192	A-228
			1.29	I	6624	29500	05	6175DC	Y	A	1247	-	A-142	A-192	A-228
1.18	15600	1760	-	-	4962	22100	05	6160DC	Y		1479	-	A-142	A-192	A-228
	18100	2050	-	-	4895	21800	05	6165DC	Y		1479	-	A-142	A-192	A-228
	22400	2530	-	-	6624	29500	05	6170DC	Y		1479	-	A-142	A-192	A-228
	25800	2910	1.08	I	6624	29500	05	6175DC	Y	A	1479	-	A-142	A-192	A-228
0.946	18600	2100	-	-	4962	22100	05	6165DC	Y		1849	AV	A-142	A-192	A-228
	22400	2530	-	-	6624	29500	05	6170DC	Y		1849	AV	A-142	A-192	A-228
	27900	3150	-	-	6624	29500	05	6175DC	Y		1849	AV	A-142	A-192	A-228
0.847	22400	2530	-	-	6624	29500	05	6170DC	Y		2065	AV	A-142	A-192	A-228
	27900	3150	-	-	6624	29500	05	6175DC	Y		2065	AV	A-142	A-192	A-228
0.690	27900	3150	-	-	6624	29500	05	6175DC	Y		2537	AV	A-142	A-192	A-228

3/4 HP, 0.55 kW, 60 Hz, 1750 RPM

Output Speed	Output Torque		Service Factor		Overhung Load[1]		Selection					Option	Dimension Page[2]		
RPM	in•lb	N•m	SF	AGMA Class	lb	N	HP Symbol	Frame Size	Shaft Spec.	AGMA Class	Ratio	Inverter Duty	CNHM CHHM[3]	CNVM CVVM[4]	CNFM CHFM[5]
292	151	17.1	1.08	I	404	1800	08	6080	Y	A	6	-	A-122	A-176	A-204
			1.41	II	404	1800	08	6085	Y	B	6	-	A-122	A-176	A-204
			2.09	III	604	2690	08	6090	Y	C	6	AV	A-122	A-176	A-204
219	202	22.8	1.08	I	438	1950	08	6080	Y	A	8	-	A-122	A-176	A-204
			1.41	II	438	1950	08	6085	Y	B	8	-	A-122	A-176	A-204
			2.09	III	671	2990	08	6090	Y	C	8	AV	A-122	A-176	A-204
159	278	31.4	1.08	I	483	2150	08	6080	Y	A	11	-	A-122	A-176	A-204
			1.41	II	483	2150	08	6085	Y	B	11	-	A-122	A-176	A-204
			2.09	III	750	3340	08	6090	Y	C	11	AV	A-122	A-176	A-204
135	328	37.1	1.08	I	519	2310	08	6080	Y	A	13	-	A-122	A-176	A-204
			1.41	II	519	2310	08	6085	Y	B	13	-	A-122	A-176	A-204
			2.09	III	750	3340	08	6090	Y	C	13	AV	A-122	A-176	A-204
117	379	42.8	1.08	I	534	2380	08	6080	Y	A	15	-	A-122	A-176	A-204
			1.41	II	534	2380	08	6085	Y	B	15	-	A-122	A-176	A-204
			2.09	III	750	3340	08	6090	Y	C	15	AV	A-122	A-176	A-204
103	429	48.5	1.08	I	559	2490	08	6080	Y	A	17	-	A-122	A-176	A-204
			1.41	II	559	2490	08	6085	Y	B	17	-	A-122	A-176	A-204
			2.09	III	750	3340	08	6090	Y	C	17	AV	A-122	A-176	A-204

Notes: [1] Refer to Technical Information Section for R1 and R2 model Overhung Load information.
[2] CNHM, CHHM, CNFM, CHFM, CNVM, CVVM are type designations, see page A-3.
[3] For Inverter Duty, single reduction, see pages A-154~163; double reduction, see pages A-164~175. For Single Phase, see page A-244.
[4] For Single Phase, see page A-245.
[5] For type CVFM, single reduction, see page A-219; double reduction, see page A-240.

3/4 HP, 0.55 kW, 60 Hz, 1750 RPM

Output Speed	Output Torque		Service Factor		Overhung Load[1]		Selection					Option	Dimension Page[2]		
RPM	in•lb	N•m	SF	AGMA Class	lb	N	HP Symbol	Frame Size	Shaft Spec.	AGMA Class	Ratio	Inverter Duty	CNHM CHHM[3]	CNVM CVVM[4]	CNFM CHFM[5]
83.3	530	59.9	1.00	I	546	2430	08	6085	Y	A	21	-	A-122	A-176	A-204
			1.38	II	750	3340	08	6090	Y	B	21	AV	A-122	A-176	A-204
			2.76	III	750	3340	08	6095	Y	C	21	AV	A-122	A-176	A-204
70.0	631	71.3	0.86	-	559	2490	08	6085	Y		25	-	A-122	A-176	A-204
			1.22	I	750	3340	08	6090	Y	A	25	AV	A-122	A-176	A-204
			1.57	II	750	3340	08	6095	Y	B	25	AV	A-122	A-176	A-204
			2.31	III	1210	5400	08	6100	Y	C	25	AV	A-122	A-176	A-204
60.3	732	82.7	0.85	-	557	2480	08	6085	Y		29	-	A-122	A-176	A-204
			1.14	I	750	3340	08	6090	Y	A	29	AV	A-122	A-176	A-204
			1.43	II	750	3340	08	6095	Y	B	29	AV	A-122	A-176	A-204
			2.20	III	1210	5400	08	6100	Y	C	29	AV	A-122	A-176	A-204
50.0	883	99.8	1.11	I	750	3340	08	6090	Y	A	35	AV	A-122	A-176	A-204
			1.38	II	750	3340	08	6095	Y	B	35	AV	A-122	A-176	A-204
			1.77	III	1210	5400	08	6100	Y	C	35	AV	A-122	A-176	A-204
40.7	1090	123	1.10	I	750	3340	08	6095	Y	A	43	AV	A-122	A-176	A-204
			1.42	II	1210	5400	08	6100	Y	B	43	AV	A-122	A-176	A-204
			1.96	III	1210	5400	08	6105	Y	C	43	AV	A-122	A-176	A-204
34.3	1280	145	1.02	I	1210	5400	08	6100	Y	A	51	AV	A-122	A-176	A-204
			1.41	II	1210	5400	08	6105	Y	B	51	AV	A-122	A-176	A-204
			1.72	III	1710	7610	08	6110	Y	C	51	AV	A-126	A-176	A-204
			2.02	III	1710	7610	08	6115	Y	C	51	AV	A-126	A-176	A-204
29.7	1490	168	1.29	I	1210	5400	08	6105	Y	A	59	AV	A-122	A-176	A-204
			1.56	II	1710	7610	08	6110	Y	B	59	AV	A-126	A-176	A-204
			1.84	III	1710	7610	08	6115	Y	C	59	AV	A-126	A-176	A-204
24.6	1790	202	1.02	I	1210	5400	08	6105	Y	A	71	AV	A-122	A-176	A-204
			1.22	I	1710	7610	08	6110	Y	A	71	AV	A-126	A-176	A-204
			1.38	II	1710	7610	08	6115	Y	B	71	AV	A-126	A-176	A-204
			1.74	III	2200	9810	08	6120	Y	C	71	AV	A-126	A-176	A-204
			2.18	III	2200	9810	08	6125	Y	C	71	AV	A-126	A-176	A-204
20.1	2190	248	1.03	I	1210	5400	08	6105	Y	A	87	AV	A-122	A-176	A-204
			1.20	I	1710	7610	08	6110	Y	A	87	AV	A-126	A-176	A-204
			1.38	II	1710	7610	08	6115	Y	B	87	AV	A-126	A-176	A-204
			1.72	III	2200	9810	08	6120	Y	C	87	AV	A-126	A-176	A-204
			2.05	III	2200	9810	08	6125	Y	C	87	AV	A-126	A-176	A-204
16.8	2490	281	1.87	III	2200	9810	08	6120DB	Y	C	104	AV	A-140	A-190	A-224
			2.24	III	2200	9810	08	6125DB	Y	C	104	AV	A-140	A-190	A-224
14.5	2890	327	1.61	III	2200	9810	08	6120DB	Y	C	121	AV	A-140	A-190	A-224
			1.90	III	2200	9810	08	6125DB	Y	C	121	AV	A-140	A-190	A-224
			2.39	III	3300	14700	08	6130DC	Y	C	121	-	A-142	A-192	A-226
12.2	3420	386	1.36	II	2200	9810	08	6120DB	Y	B	143	AV	A-140	A-190	A-224
			1.63	III	2200	9810	08	6125DB	Y	C	143	AV	A-140	A-190	A-224
			2.02	III	3300	14700	08	6130DC	Y	C	143	-	A-142	A-192	A-226
			2.43	III	3300	14700	08	6135DC	Y	C	143	-	A-142	A-192	A-226
10.6	3950	446	1.18	I	2200	9810	08	6120DB	Y	A	165	AV	A-140	A-190	A-224
			1.41	II	2200	9810	08	6125DB	Y	B	165	AV	A-140	A-190	A-224
			1.75	III	3300	14700	08	6130DC	Y	C	165	-	A-142	A-192	A-226
			2.11	III	3300	14700	08	6135DC	Y	C	165	-	A-142	A-192	A-226

Notes: [1] Refer to Technical Information Section for R1 and R2 model Overhung Load information.
[2] CNHM, CHHM, CNFM, CHFM, CNVM, CVVM are type designations, see page A-3.
[3] For Inverter Duty, single reduction, see pages A-154~163; double reduction, see pages A-164~175. For Single Phase, see page A-244.
[4] For Single Phase, see page A-245.
[5] For type CVFM, single reduction, see page A-219; double reduction, see page A-240.

SELECTION TABLES – 60 Hz

3/4 HP, 0.55 kW, 60 Hz, 1750 RPM

Output Speed	Output Torque		Service Factor		Overhung Load[1]		Selection					Option	Dimension Page[2]		
RPM	in•lb	N•m	SF	AGMA Class	lb	N	HP Symbol	Frame Size	Shaft Spec.	AGMA Class	Ratio	Inverter Duty	CNHM CHHM[3]	CNVM CVVM[4]	CNFM CHFM[5]
8.97	4650	525	-	-	2200	9810	08	6120DB	Y		195	AV	A-140	A-190	A-224
	4660	527	1.20	I	2200	9810	08	6125DB	Y	A	195	AV	A-140	A-190	A-224
			1.48	II	3300	14700	08	6130DC	Y	B	195	AV	A-142	A-192	A-226
			1.78	III	3300	14700	08	6135DC	Y	C	195	AV	A-142	A-192	A-226
			2.33	III	3590	16000	08	6140DB	Y	C	195	AV	A-142	A-192	A-226
7.58	4620	522	-	-	2200	9810	08	6120DB	Y		231	AV	A-140	A-190	A-224
	5520	624	1.01	I	2200	9810	08	6125DB	Y	A	231	AV	A-140	A-190	A-224
			1.25	I	3300	14700	08	6130DC	Y	A	231	-	A-142	A-192	A-226
			1.51	II	3300	14700	08	6135DC	Y	B	231	-	A-142	A-192	A-226
			1.96	III	3590	16000	08	6140DB	Y	C	231	AV	A-142	A-192	A-226
			2.14	III	3590	16000	08	6145DB	Y	C	231	AV	A-142	A-192	A-226
6.41	5570	630	-	-	2200	9810	08	6125DB	Y		273	AV	A-140	A-190	A-224
	6520	737	1.06	I	3300	14700	08	6130DC	Y	A	273	AV	A-142	A-192	A-226
			1.28	I	3300	14700	08	6135DC	Y	A	273	AV	A-142	A-192	A-226
			1.67	III	3590	16000	08	6140DB	Y	C	273	AV	A-142	A-192	A-226
			1.82	III	3590	16000	08	6145DB	Y	C	273	AV	A-142	A-192	A-226
			2.39	III	4960	22100	08	6160DC	Y	C	273	AV	A-142	A-192	A-228
5.49	5570	630	-	-	2200	9810	08	6125DB	Y		319	AV	A-140	A-190	A-224
	6900	780	-	-	3300	14700	08	6130DC	Y		319	-	A-142	A-192	A-226
	7630	862	1.09	I	3300	14700	08	6135DC	Y	A	319	-	A-142	A-192	A-226
			1.42	II	3590	16000	08	6140DB	Y	B	319	AV	A-142	A-192	A-226
			1.59	II	3590	16000	08	6145DB	Y	B	319	AV	A-142	A-192	A-226
			2.04	III	4960	22100	08	6160DC	Y	C	319	-	A-142	A-192	A-228
			2.44	III	4960	22100	08	6165DC	Y	C	319	-	A-142	A-192	A-228
4.64	6900	780	-	-	3300	14700	08	6130DC	Y		377	AV	A-142	A-192	A-226
	8320	940	-	-	3300	14700	08	6135DC	Y		377	AV	A-142	A-192	A-226
	9020	1020	1.21	I	3590	16000	08	6140DB	Y	A	377	AV	A-142	A-192	A-226
			1.35	II	3590	16000	08	6145DB	Y	B	377	AV	A-142	A-192	A-226
			1.72	III	4960	22100	08	6160DC	Y	C	377	AV	A-142	A-192	A-228
			2.06	III	4960	22100	08	6165DC	Y	C	377	AV	A-142	A-192	A-228
			2.48	III	6620	29500	08	6170DC	Y	C	377	AV	A-142	A-192	A-228
3.70	8320	940	-	-	3300	14700	08	6135DC	Y		473	-	A-142	A-192	A-226
	10900	1230	-	-	3590	16000	08	6140DB	Y		473	AV	A-142	A-192	A-226
	11300	1280	1.07	I	3590	16000	08	6145DB	Y	A	473	AV	A-142	A-192	A-226
			1.36	II	4960	22100	08	6160DC	Y	B	473	-	A-142	A-192	A-228
			1.64	III	4960	22100	08	6165DC	Y	C	473	-	A-142	A-192	A-228
			1.98	III	6620	29500	08	6170DC	Y	C	473	-	A-142	A-192	A-228
			2.47	III	6620	29500	08	6175DC	Y	C	473	-	A-142	A-192	A-228
3.13	10900	1230	-	-	3590	16000	08	6140DB	Y		559	AV	A-142	A-192	A-226
	12100	1370	-	-	3530	15700	08	6145DB	Y		559	AV	A-142	A-192	A-226
	13400	1510	1.15	I	4960	22100	08	6160DC	Y	A	559	AV	A-142	A-192	A-228
			1.39	II	4960	22100	08	6165DC	Y	B	559	AV	A-142	A-192	A-228
			1.68	III	6620	29500	08	6170DC	Y	C	559	AV	A-142	A-192	A-228
			2.09	III	6620	29500	08	6175DC	Y	C	559	AV	A-142	A-192	A-228
2.70	12100	1370	-	-	3590	16000	08	6145DB	Y		649	AV	A-142	A-192	A-226
	15600	1760	-	-	4960	22100	08	6160DC	Y		649	-	A-142	A-192	A-228
	15500	1750	1.20	I	4960	22100	08	6165DC	Y	A	649	-	A-142	A-192	A-228
			1.44	II	6620	29500	08	6170DC	Y	B	649	-	A-142	A-192	A-228
			1.80	III	6620	29500	08	6175DC	Y	C	649	-	A-142	A-192	A-228

Notes: [1] Refer to Technical Information Section for R1 and R2 model Overhung Load information.
[2] CNHM, CHHM, CNFM, CHFM, CNVM, CVVM are type designations, see page A-3.
[3] For Inverter Duty, single reduction, see pages A-154~163; double reduction, see pages A-164~175. For Single Phase, see page A-244.
[4] For Single Phase, see page A-245.
[5] For type CVFM, single reduction, see page A-219; double reduction, see page A-240.

3/4 HP, 0.55 kW, 60 Hz, 1750 RPM

Output Speed	Output Torque		Service Factor		Overhung Load[1]		Selection					Option	Dimension Page[2]		
RPM	in•lb	N•m	SF	AGMA Class	lb	N	HP Symbol	Frame Size	Shaft Spec.	AGMA Class	Ratio	Inverter Duty	CNHM CHHM[3]	CNVM CVVM[4]	CNFM CHFM[5]
2.39	15400	1740	-	-	4960	22100	08	6160DC	Y		731	AV	A-142	A-192	A-228
	17400	1970	1.06	I	4960	22100	08	6165DC	Y	A	731	AV	A-142	A-192	A-228
			1.28	I	6620	29500	08	6170DC	Y	A	731	AV	A-142	A-192	A-228
			1.60	III	6620	29500	08	6175DC	Y	C	731	AV	A-142	A-192	A-228
2.08	15600	1760	-	-	4960	22100	08	6160DC	Y		841	AV	A-142	A-192	A-228
	18600	2100	-	-	4960	22100	08	6165DC	Y		841	AV	A-142	A-192	A-228
	20100	2270	1.11	I	6620	29500	08	6170DC	Y	A	841	AV	A-142	A-192	A-228
			1.39	II	6620	29500	08	6175DC	Y	B	841	AV	A-142	A-192	A-228
1.74	18600	2100	-	-	4960	22100	08	6165DC	Y		1003	AV	A-142	A-192	A-228
	22400	2530	-	-	6620	29500	08	6170DC	Y		1003	AV	A-142	A-192	A-228
	24000	2710	1.16	I	6620	29500	08	6175DC	Y	A	1003	AV	A-142	A-192	A-228
1.40	22400	2530	-	-	6620	29500	08	6170DC	Y		1247	AV	A-142	A-192	A-228
	27900	3150	-	-	6620	29500	08	6175DC	Y		1247	AV	A-142	A-192	A-228
1.18	27900	3150	-	-	6620	29500	08	6175DC	Y		1479	AV	A-142	A-192	A-228

1 HP, 0.75 kW, 60 Hz, 1750 RPM

Output Speed	Output Torque		Service Factor		Overhung Load[1]		Selection					Option	Dimension Page[2]		
RPM	in•lb	N•m	SF	AGMA Class	lb	N	HP Symbol	Frame Size	Shaft Spec.	AGMA Class	Ratio	Inverter Duty	CNHM CHHM[3]	CNVM CVVM[4]	CNFM CHFM[5]
292	206	23.3	1.04	I	402	1790	1	6085	Y	A	6	-	A-122	A-176	A-204
			1.53	II	599	2670	1	6090	Y	B	6	AV	A-122	A-176	A-204
			2.03	III	599	2670	1	6095	Y	C	6	AV	A-122	A-176	A-204
219	275	31.1	1.04	I	433	1930	1	6085	Y	A	8	-	A-122	A-176	A-204
			1.53	II	669	2980	1	6090	Y	B	8	AV	A-122	A-176	A-204
			2.03	III	669	2980	1	6095	Y	C	8	AV	A-122	A-176	A-204
159	379	42.8	1.04	I	478	2130	1	6085	Y	A	11	-	A-122	A-176	A-204
			1.53	II	750	3340	1	6090	Y	B	11	AV	A-122	A-176	A-204
			2.03	III	750	3340	1	6095	Y	C	11	AV	A-122	A-176	A-204
135	447	50.5	1.04	I	512	2280	1	6085	Y	A	13	-	A-122	A-176	A-204
			1.53	II	750	3340	1	6090	Y	B	13	AV	A-122	A-176	A-204
			2.03	III	750	3340	1	6095	Y	C	13	AV	A-122	A-176	A-204
117	516	58.3	1.04	I	528	2350	1	6085	Y	A	15	-	A-122	A-176	A-204
			1.53	II	750	3340	1	6090	Y	B	15	AV	A-122	A-176	A-204
			2.03	III	750	3340	1	6095	Y	C	15	AV	A-122	A-176	A-204
103	585	66.1	1.04	I	552	2460	1	6085	Y	A	17	-	A-122	A-176	A-204
			1.53	II	750	3340	1	6090	Y	B	17	AV	A-122	A-176	A-204
			2.03	III	750	3340	1	6095	Y	C	17	AV	A-122	A-176	A-204
83.3	723	81.7	1.01	I	750	3340	1	6090	Y	A	21	AV	A-122	A-176	A-204
			2.03	III	750	3340	1	6095	Y	C	21	AV	A-122	A-176	A-204
70.0	860	97.2	1.15	I	750	3340	1	6095	Y	A	25	AV	A-122	A-176	A-204
			1.69	III	1210	5400	1	6100	Y	C	25	AV	A-122	A-176	A-204
			2.23	III	1210	5400	1	6105	Y	C	25	AV	A-122	A-176	A-204
60.3	1000	113	1.05	I	750	3340	1	6095	Y	A	29	AV	A-122	A-176	A-204
			1.61	III	1210	5400	1	6100	Y	C	29	AV	A-122	A-176	A-204
			2.12	III	1210	5400	1	6105	Y	C	29	AV	A-122	A-176	A-204

Notes: [1] Refer to Technical Information Section for R1 and R2 model Overhung Load information.
[2] CNHM, CHHM, CNFM, CHFM, CNVM, CVVM are type designations, see page A-3.
[3] For Inverter Duty, single reduction, see pages A-154~163; double reduction, see pages A-164~175. For Single Phase, see page A-244.
[4] For Single Phase, see page A-245.
[5] For type CVFM, single reduction, see page A-219; double reduction, see page A-240.

SELECTION TABLES – 60 Hz

1 HP, 0.75 kW, 60 Hz, 1750 RPM

Output Speed	Output Torque		Service Factor		Overhung Load[1]		Selection					Option	Dimension Page[2]		
RPM	in•lb	N•m	SF	AGMA Class	lb	N	HP Symbol	Frame Size	Shaft Spec.	AGMA Class	Ratio	Inverter Duty	CNHM CHHM[3]	CNVM CVVM[4]	CNFM CHFM[5]
50.0	1200	136	1.01	I	748	3330	1	6095	Y	A	35	AV	A-122	A-176	A-204
			1.30	II	1210	5400	1	6100	Y	B	35	AV	A-122	A-176	A-204
			1.60	III	1210	5400	1	6105	Y	C	35	AV	A-122	A-176	A-204
			2.00	III	1680	7490	1	6110	Y	C	35	AV	A-126	A-176	A-204
40.7	1480	167	0.80	-	736	3280	1	6095	Y		43	AV	A-122	A-176	A-204
			1.04	I	1210	5400	1	6100	Y	A	43	AV	A-122	A-176	A-204
			1.44	II	1210	5400	1	6105	Y	B	43	AV	A-122	A-176	A-204
			1.73	III	1710	7610	1	6110	Y	C	43	AV	A-126	A-176	A-204
			2.03	III	1710	7610	1	6115	Y	C	43	AV	A-126	A-176	A-204
34.3	1750	198	1.03	I	1210	5390	1	6105	Y	A	51	AV	A-122	A-176	A-204
			1.48	II	1710	7610	1	6115	Y	B	51	AV	A-126	A-176	A-204
			2.29	III	2200	9810	1	6120	Y	C	51	AV	A-126	A-176	A-204
29.7	2030	229	0.94	-	1210	5370	1	6105	Y		59	AV	A-122	A-176	A-204
			1.15	I	1710	7610	1	6110	Y	A	59	AV	A-126	A-176	A-204
			1.35	II	1710	7610	1	6115	Y	B	59	AV	A-126	A-176	A-204
			1.73	III	2200	9810	1	6120	Y	C	59	AV	A-126	A-176	A-204
			2.16	III	2200	9810	1	6125	Y	C	59	AV	A-126	A-176	A-204
24.6	2440	276	1.01	I	1710	7610	1	6115	Y	A	71	AV	A-126	A-176	A-204
			1.28	I	2200	9810	1	6120	Y	A	71	AV	A-126	A-176	A-204
			1.60	III	2200	9810	1	6125	Y	C	71	AV	A-126	A-176	A-204
			2.44	III	2940	13100	1	6130	Y	C	71	AV	A-128	A-176	A-204
20.1	2990	338	1.01	I	1710	7610	1	6115	Y	A	87	AV	A-126	A-176	A-204
			1.51	II	2200	9810	1	6125	Y	B	87	AV	A-126	A-176	A-204
			1.89	III	3190	14200	1	6130	Y	C	87	AV	A-128	A-180	A-208
16.8	3390	383	1.37	II	2200	9810	1	6120DB	Y	B	104	AV	A-140	A-190	A-224
			1.64	III	2200	9810	1	6125DB	Y	C	104	AV	A-140	A-190	A-224
			2.04	III	3300	14700	1	6130DC	Y	C	104	AV	A-142	A-192	A-226
			2.45	III	3300	14700	1	6135DC	Y	C	104	AV	A-142	A-192	A-226
14.5	3950	446	1.18	I	2200	9810	1	6120DB	Y	A	121	AV	A-140	A-190	A-224
			1.40	II	2200	9810	1	6125DB	Y	B	121	AV	A-140	A-190	A-224
			1.75	III	3300	14700	1	6130DC	Y	C	121	AV	A-142	A-192	A-226
			2.11	III	3300	14700	1	6135DC	Y	C	121	AV	A-142	A-192	A-226
12.2	4650	525	-	-	2200	9810	1	6120DB	Y		143	AV	A-140	A-190	A-224
	4660	527	1.20	I	2200	9810	1	6125DB	Y	A	143	AV	A-140	A-190	A-224
			1.48	II	3300	14700	1	6130DC	Y	B	143	AV	A-142	A-192	A-226
			1.78	III	3300	14700	1	6135DC	Y	C	143	AV	A-142	A-192	A-226
			2.13	III	3590	16000	1	6140DB	Y	C	143	AV	A-142	A-192	A-226
10.6	4650	525	-	-	2200	9810	1	6120DB	Y		165	AV	A-140	A-190	A-224
	5380	608	1.04	I	2200	9810	1	6125DB	Y	A	165	AV	A-140	A-190	A-224
			1.28	I	3300	14700	1	6130DC	Y	A	165	AV	A-142	A-192	A-226
			1.55	II	3300	14700	1	6135DC	Y	B	165	AV	A-142	A-192	A-226
			2.02	III	3590	16000	1	6140DB	Y	C	165	AV	A-142	A-192	A-226
			2.13	III	3590	16000	1	6145DB	Y	C	165	AV	A-142	A-192	A-226
8.97	5570	630	-	-	2200	9810	1	6125DB	Y		195	AV	A-140	A-190	A-224
	6350	718	1.09	I	3300	14700	1	6130DC	Y	A	195	AV	A-142	A-192	A-226
			1.31	II	3300	14700	1	6135DC	Y	B	195	AV	A-142	A-192	A-226
			1.71	III	3590	16000	1	6140DB	Y	C	195	AV	A-142	A-192	A-226
			1.89	III	3590	16000	1	6145DB	Y	C	195	AV	A-142	A-192	A-226
			2.45	III	4960	22100	1	6160DC	Y	C	195	AV	A-142	A-192	A-228

Notes: [1] Refer to Technical Information Section for R1 and R2 model Overhung Load information.
[2] CNHM, CHHM, CNFM, CHFM, CNVM, CVVM are type designations, see page A-3.
[3] For Inverter Duty, single reduction, see pages A-154~163; double reduction, see pages A-164~175. For Single Phase, see page A-244.
[4] For Single Phase, see page A-245.
[5] For type CVFM, single reduction, see page A-219; double reduction, see page A-240.

1 HP, 0.75 kW, 60 Hz, 1750 RPM

Output Speed	Output Torque		Service Factor		Overhung Load[1]		Selection					Option	Dimension Page[2]		
RPM	in•lb	N•m	SF	AGMA Class	lb	N	HP Symbol	Frame Size	Shaft Spec.	AGMA Class	Ratio	Inverter Duty	CNHM CHHM[3]	CNVM CVVM[4]	CNFM CHFM[5]
7.58	5570	630	-	-	2200	9810	1	6125DB	Y		231	AV	A-140	A-190	A-224
	6900	780	-	-	3300	14700	1	6130DC	Y		231	AV	A-142	A-192	A-226
	7530	851	1.10	I	3300	14700	1	6135DC	Y	A	231	AV	A-142	A-192	A-226
			1.44	II	3590	16000	1	6140DB	Y	B	231	AV	A-142	A-192	A-226
			1.57	II	3590	16000	1	6145DB	Y	B	231	AV	A-142	A-192	A-226
			2.07	III	4960	22100	1	6160DC	Y	C	231	AV	A-142	A-192	A-228
			2.47	III	4960	22100	1	6165DC	Y	C	231	AV	A-142	A-192	A-228
6.41	6900	780	-	-	3300	14700	1	6130DC	Y		273	AV	A-142	A-192	A-226
	8320	940	-	-	3300	14700	1	6135DC	Y		273	AV	A-142	A-192	A-226
	8940	1010	1.22	I	3590	16000	1	6140DB	Y	A	273	AV	A-142	A-192	A-226
			1.33	II	3590	16000	1	6145DB	Y	B	273	AV	A-142	A-192	A-226
			1.75	III	4960	22100	1	6160DC	Y	C	273	AV	A-142	A-192	A-228
			2.09	III	4960	22100	1	6165DC	Y	C	273	AV	A-142	A-192	A-228
			2.50	III	6620	29500	1	6170DC	Y	C	273	AV	A-142	A-192	A-228
5.49	8320	940	-	-	3300	14700	1	6135DC	Y		319	AV	A-142	A-192	A-226
	10400	1180	1.04	I	3590	16000	1	6140DB	Y	A	319	AV	A-142	A-192	A-226
			1.17	I	3590	16000	1	6145DB	Y	A	319	AV	A-142	A-192	A-226
			1.49	II	4960	22100	1	6160DC	Y	B	319	AV	A-142	A-192	A-228
			1.79	III	4960	22100	1	6165DC	Y	C	319	AV	A-142	A-192	A-228
			2.14	III	6620	29500	1	6170DC	Y	C	319	AV	A-142	A-192	A-228
4.64	10900	1230	-	-	3590	16000	1	6140DB	Y		377	AV	A-142	A-192	A-226
	12300	1390	0.99	-	3530	15700	1	6145DB	Y		377	AV	A-142	A-192	A-226
			1.27	I	4960	22100	1	6160DC	Y	A	377	AV	A-142	A-192	A-228
			1.51	II	4960	22100	1	6165DC	Y	B	377	AV	A-142	A-192	A-228
			1.82	III	6620	29500	1	6170DC	Y	C	377	AV	A-142	A-192	A-228
			2.27	III	6620	29500	1	6175DC	Y	C	377	AV	A-142	A-192	A-228
3.70	12100	1370	-	-	3530	15700	1	6145DB	Y		473	AV	A-142	A-192	A-226
	15400	1740	1.00	I	4960	22100	1	6160DC	Y	A	473	AV	A-142	A-192	A-228
			1.21	I	4960	22100	1	6165DC	Y	A	473	AV	A-142	A-192	A-228
			1.45	II	6620	29500	1	6170DC	Y	B	473	AV	A-142	A-192	A-228
			1.81	III	6620	29500	1	6175DC	Y	C	473	AV	A-142	A-192	A-228
			2.33	III	9360	41700	1	6180DB	Y	C	473	-	A-142	A-192	A-230
3.13	15400	1740	-	-	4960	22100	1	6160DC	Y		559	AV	A-142	A-192	A-228
	18200	2060	1.02	I	4960	22100	1	6165DC	Y	A	559	AV	A-142	A-192	A-228
			1.23	I	6620	29500	1	6170DC	Y	A	559	AV	A-142	A-192	A-228
			1.53	II	6620	29500	1	6175DC	Y	B	559	AV	A-142	A-192	A-228
			1.97	III	9360	41700	1	6180DB	Y	C	559	-	A-142	A-192	A-230
			2.43	III	9360	41700	1	6185DB	Y	C	559	-	A-142	A-192	A-230
2.70	18600	2100	-	-	4960	22100	1	6165DC	Y		649	AV	A-142	A-192	A-228
	21100	2390	1.06	I	6620	29500	1	6170DC	Y	A	649	AV	A-142	A-192	A-228
			1.32	II	6620	29500	1	6175DC	Y	B	649	AV	A-142	A-192	A-228
			1.69	III	9360	41700	1	6180DB	Y	C	649	-	A-142	A-192	A-230
			2.09	III	9360	41700	1	6185DB	Y	C	649	-	A-142	A-192	A-230
			2.67	III	13200	59000	1	6190DA	Y	C	649	AV	A-142	A-192	A-230

Notes: [1] Refer to Technical Information Section for R1 and R2 model Overhung Load information.
[2] CNHM, CHHM, CNFM, CHFM, CNVM, CVVM are type designations, see page A-3.
[3] For Inverter Duty, single reduction, see pages A-154~163; double reduction, see pages A-164~175. For Single Phase, see page A-244.
[4] For Single Phase, see page A-245.
[5] For type CVFM, single reduction, see page A-219; double reduction, see page A-240.

SELECTION TABLES – 60 Hz

1 HP, 0.75 kW, 60 Hz, 1750 RPM

Output Speed	Output Torque		Service Factor		Overhung Load[1]		Selection					Option	Dimension Page[2]		
RPM	in•lb	N•m	SF	AGMA Class	lb	N	HP Symbol	Frame Size	Shaft Spec.	AGMA Class	Ratio	Inverter Duty	CNHM CHHM[3]	CNVM CVVM[4]	CNFM CHFM[5]
2.39	18600	2100	-	-	4960	22100	1	6165DC	Y		731	AV	A-142	A-192	A-228
	22400	2530	-	-	6620	29500	1	6170DC	Y		731	AV	A-142	A-192	A-228
	23800	2690	1.17	I	6620	29500	1	6175DC	Y	A	731	AV	A-142	A-192	A-228
			1.51	II	9360	41700	1	6180DB	Y	B	731	-	A-142	A-192	A-230
			1.86	III	9360	41700	1	6185DB	Y	C	731	-	A-142	A-192	A-230
			2.37	III	13200	59000	1	6190DA	Y	C	731	AV	A-142	A-192	A-230
2.08	22400	2530	-	-	6620	29500	1	6170DC	Y		841	AV	A-142	A-192	A-228
	27400	3100	1.02	I	6620	29500	1	6175DC	Y	A	841	AV	A-142	A-192	A-228
			1.31	II	9360	41700	1	6180DB	Y	B	841	AV	A-142	A-192	A-230
			1.61	III	9360	41700	1	6185DB	Y	C	841	AV	A-142	A-192	A-230
			2.06	III	13200	59000	1	6190DA	Y	C	841	AV	A-142	A-192	A-230
			2.57	III	13200	59000	1	6195DA	Y	C	841	AV	A-142	A-192	A-230
1.74	27900	3150	-	-	6620	29500	1	6175DC	Y		1003	AV	A-142	A-192	A-228
	32600	3690	1.10	I	9360	41700	1	6180DB	Y	A	1003	-	A-142	A-192	A-230
			1.35	II	9360	41700	1	6185DB	Y	B	1003	-	A-142	A-192	A-230
			1.73	III	13200	59000	1	6190DA	Y	C	1003	AV	A-142	A-192	A-230
			2.15	III	13200	59000	1	6195DA	Y	C	1003	AV	A-142	A-192	A-230
1.40	35900	4060	-	-	9360	41700	1	6180DB	Y		1247	AV	A-142	A-192	A-230
	40600	4590	1.09	I	9360	41700	1	6185DB	Y	A	1247	AV	A-142	A-192	A-230
			1.39	II	13200	59000	1	6190DA	Y	B	1247	AV	A-142	A-192	A-230
			1.73	III	13200	59000	1	6195DA	Y	C	1247	AV	A-142	A-192	A-230
1.18	35900	4060	-	-	9360	41700	1	6180DB	Y		1479	-	A-142	A-192	A-230
	44200	5000	-	-	9360	41700	1	6185DB	Y		1479	-	A-142	A-192	A-230
	48200	5450	1.17	I	13200	59000	1	6190DA	Y	A	1479	AV	A-142	A-192	A-230
			1.46	II	13200	59000	1	6195DA	Y	B	1479	AV	A-142	A-192	A-230
0.946	44200	5000	-	-	9360	41700	1	6185DB	Y		1849	AV	A-142	A-192	A-230
	56500	6380	-	-	13200	59000	1	6190DA	Y		1849	AV	A-142	A-192	A-230
	60300	6810	1.17	I	13200	59000	1	6195DA	Y	A	1849	AV	A-142	A-192	A-230
0.847	44200	5000	-	-	9340	41600	1	6185DB	Y		2065	AV	A-142	A-192	A-230
	56500	6380	-	-	13200	58600	1	6190DA	Y		2065	AV	A-142	A-192	A-230
	67300	7610	1.05	I	13100	58200	1	6195DA	Y	A	2065	AV	A-142	A-192	A-230
0.690	56500	6380	-	-	13200	58600	1	6190DA	Y		2537	AV	A-142	A-192	A-230
	70400	7960	-	-	13000	58100	1	6195DA	Y		2537	AV	A-142	A-192	A-230
	82700	9350	1.00	I	18900	84100	1	6205DA	Y	A	2537	AV	A-146	A-196	A-232
0.575	56500	6380	-	-	13200	58900	1	6190DA	Y		3045	AV	A-142	A-192	A-230
	70400	7960	-	-	13100	58400	1	6195DA	Y		3045	AV	A-142	A-192	A-230
	77500	8760	-	-	18900	84100	1	6205DA	Y		3045	AV	A-146	A-196	A-232
0.503	56500	6380	-	-	13200	58600	1	6190DA	Y		3481	AV	A-142	A-192	A-230
	70400	7960	-	-	13000	58100	1	6195DA	Y		3481	AV	A-142	A-192	A-230
	82300	9300	-	-	18900	84100	1	6205DA	Y		3481	AV	A-146	A-196	A-232
0.394	56500	6380	-	-	13200	58900	1	6190DA	Y		4437	AV	A-142	A-192	A-230
	70400	7960	-	-	13100	58400	1	6195DA	Y		4437	AV	A-142	A-192	A-230
	77500	8760	-	-	18900	84100	1	6205DA	Y		4437	AV	A-146	A-196	A-232
0.341	56500	6380	-	-	13200	58900	1	6190DA	Y		5133	AV	A-142	A-192	A-230
	70400	7960	-	-	13100	58400	1	6195DA	Y		5133	AV	A-142	A-192	A-230
	82300	9300	-	-	18900	84100	1	6205DA	Y		5133	AV	A-146	A-196	A-232

Notes: [1] Refer to Technical Information Section for R1 and R2 model Overhung Load information.
[2] CNHM, CHHM, CNFM, CHFM, CNVM, CVVM are type designations, see page A-3.
[3] For Inverter Duty, single reduction, see pages A-154~163; double reduction, see pages A-164~175. For Single Phase, see page A-244.
[4] For Single Phase, see page A-245.
[5] For type CVFM, single reduction, see page A-219; double reduction, see page A-240.

1 HP, 0.75 kW, 60 Hz, 1750 RPM

Output Speed	Output Torque		Service Factor		Overhung Load[1]		Selection					Option	Dimension Page[2]		
RPM	in•lb	N•m	SF	AGMA Class	lb	N	HP Symbol	Frame Size	Shaft Spec.	AGMA Class	Ratio	Inverter Duty	CNHM CHHM[3]	CNVM CVVM[4]	CNFM CHFM[5]
0.283	56500	6380	-	-	13200	58900	1	6190DA	Y		6177	AV	A-142	A-192	A-230
	70400	7960	-	-	13100	58400	1	6195DA	Y		6177	AV	A-142	A-192	A-230
	77500	8760	-	-	18900	84100	1	6205DA	Y		6177	AV	A-146	A-196	A-232
0.231	56500	6380	-	-	13200	58900	1	6190DA	Y		7569	AV	A-142	A-192	A-230
	70400	7960	-	-	13100	58400	1	6195DA	Y		7569	AV	A-142	A-192	A-230
	77500	8760	-	-	18900	84100	1	6205DA	Y		7569	AV	A-146	A-196	A-232

1.5 HP, 1.1 kW, 60 Hz, 1750 RPM

Output Speed	Output Torque		Service Factor		Overhung Load[1]		Selection					Option	Dimension Page[2]		
RPM	in•lb	N•m	SF	AGMA Class	lb	N	HP Symbol	Frame Size	Shaft Spec.	AGMA Class	Ratio	Inverter Duty	CNHM CHHM[3]	CNVM CVVM[4]	CNFM CHFM[5]
292	303	34.2	1.05	I	595	2650	1H	6090	Y	A	6	-	A-122	A-176	A-204
			1.38	II	595	2650	1H	6095	Y	B	6	-	A-122	A-176	A-204
			2.14	III	876	3900	1H	6100	Y	C	6	AV	A-122	A-176	A-204
219	403	45.6	1.05	I	662	2950	1H	6090	Y	A	8	-	A-122	A-176	A-204
			1.38	II	662	2950	1H	6095	Y	B	8	-	A-122	A-176	A-204
			2.14	III	977	4350	1H	6100	Y	C	8	AV	A-122	A-176	A-204
159	555	62.7	1.05	I	750	3340	1H	6090	Y	A	11	-	A-122	A-176	A-204
			1.38	II	750	3340	1H	6095	Y	B	11	-	A-122	A-176	A-204
			2.14	III	1110	4950	1H	6100	Y	C	11	AV	A-122	A-176	A-204
135	656	74.1	1.05	I	750	3340	1H	6090	Y	A	13	-	A-122	A-176	A-204
			1.38	II	750	3340	1H	6095	Y	B	13	-	A-122	A-176	A-204
			2.14	III	1150	5140	1H	6100	Y	C	13	AV	A-122	A-176	A-204
117	757	85.5	1.05	I	750	3340	1H	6090	Y	A	15	-	A-122	A-176	A-204
			1.38	II	750	3340	1H	6095	Y	B	15	-	A-122	A-176	A-204
			2.14	III	1210	5400	1H	6100	Y	C	15	AV	A-122	A-176	A-204
103	857	96.9	1.05	I	750	3340	1H	6090	Y	A	17	-	A-122	A-176	A-204
			1.38	II	750	3340	1H	6095	Y	B	17	-	A-122	A-176	A-204
			1.81	III	1210	5400	1H	6100	Y	C	17	AV	A-122	A-176	A-204
83.3	1060	120	1.38	II	750	3340	1H	6095	Y	B	21	-	A-122	A-176	A-204
			1.75	III	1210	5400	1H	6100	Y	C	21	AV	A-122	A-176	A-204
			2.13	III	1210	5400	1H	6105	Y	C	21	AV	A-122	A-176	A-204
70.0	1270	143	1.15	I	1210	5400	1H	6100	Y	A	25	AV	A-122	A-176	A-204
			1.52	II	1210	5400	1H	6105	Y	B	25	AV	A-122	A-176	A-204
			1.74	III	1520	6770	1H	6110	Y	C	25	AV	A-126	A-176	A-204
			2.02	III	1520	6770	1H	6115	Y	C	25	AV	A-126	A-176	A-204
60.3	1460	165	1.10	I	1210	5400	1H	6100	Y	A	29	AV	A-122	A-176	A-204
			1.45	II	1210	5400	1H	6105	Y	B	29	AV	A-122	A-176	A-204
			1.73	III	1560	6960	1H	6110	Y	C	29	AV	A-126	A-176	A-204
			2.02	III	1560	6960	1H	6115	Y	C	29	AV	A-126	A-176	A-204
50.0	1770	200	1.09	I	1210	5400	1H	6105	Y	A	35	AV	A-122	A-176	A-204
			1.36	II	1670	7430	1H	6110	Y	B	35	AV	A-126	A-176	A-204
			1.65	III	1670	7430	1H	6115	Y	C	35	AV	A-126	A-176	A-204
			2.26	III	2020	9000	1H	6120	Y	C	35	AV	A-126	A-176	A-204

Notes: [1] Refer to Technical Information Section for R1 and R2 model Overhung Load information.
[2] CNHM, CHHM, CNFM, CHFM, CNVM, CVVM are type designations, see page A-3.
[3] For Inverter Duty, single reduction, see pages A-154~163; double reduction, see pages A-164~175. For Single Phase, see page A-244.
[4] For Single Phase, see page A-245.
[5] For type CVFM, single reduction, see page A-219; double reduction, see page A-240.

SELECTION TABLES – 60 Hz

1.5 HP, 1.1 kW, 60 Hz, 1750 RPM

Output Speed	Output Torque		Service Factor		Overhung Load[1]		Selection					Option	Dimension Page[2]		
RPM	in•lb	N•m	SF	AGMA Class	lb	N	HP Symbol	Frame Size	Shaft Spec.	AGMA Class	Ratio	Inverter Duty	CNHM CHHM[3]	CNVM CVVM[4]	CNFM CHFM[5]
40.7	2170	245	0.98	-	1210	5380	1H	6105	Y		43	AV	A-122	A-176	A-204
			1.18	I	1710	7610	1H	6110	Y	A	43	AV	A-126	A-176	A-204
			1.38	II	1710	7610	1H	6115	Y	B	43	AV	A-126	A-176	A-204
			1.74	III	2150	9580	1H	6120	Y	C	43	AV	A-126	A-176	A-204
			2.16	III	2150	9580	1H	6125	Y	C	43	AV	A-126	A-176	A-204
34.3	2570	291	1.01	I	1710	7610	1H	6115	Y	A	51	AV	A-126	A-176	A-204
			1.56	II	2200	9810	1H	6120	Y	B	51	AV	A-126	A-176	A-204
			2.07	III	2200	9810	1H	6125	Y	C	51	AV	A-126	A-176	A-204
29.7	2970	336	0.92	-	1710	7610	1H	6115	Y		59	AV	A-126	A-176	A-204
			1.18	I	2200	9810	1H	6120	Y	A	59	AV	A-126	A-176	A-204
			1.47	II	2200	9810	1H	6125	Y	B	59	AV	A-126	A-176	A-204
			1.99	III	2760	12300	1H	6130	Y	C	59	AV	A-128	A-180	A-208
24.6	3580	405	1.09	I	2200	9810	1H	6125	Y	A	71	AV	A-126	A-176	A-204
			1.66	III	2940	13100	1H	6130	Y	C	71	AV	A-128	A-180	A-208
			1.97	III	2940	13100	1H	6135	Y	C	71	AV	A-128	A-180	A-208
20.1	4390	496	1.03	I	2200	9810	1H	6125	Y	A	87	AV	A-126	A-176	A-204
			1.29	I	3170	14100	1H	6130	Y	A	87	AV	A-128	A-180	A-208
			1.74	III	3170	14100	1H	6135	Y	C	87	AV	A-128	A-180	A-208
			1.80	III	3590	16000	1H	6140	Y	C	87	AV	A-128	A-180	A-208
16.8	4650	525	-	-	2200	9810	1H	6120DB	Y		104	-	A-140	A-190	A-224
	4970	562	1.12	I	2200	9810	1H	6125DB	Y	A	104	-	A-140	A-190	A-224
			1.39	II	3300	14700	1H	6130DC	Y	B	104	AV	A-142	A-192	A-226
			1.67	III	3300	14700	1H	6135DC	Y	C	104	AV	A-142	A-192	A-226
14.5	4650	525	-	-	2200	9810	1H	6120DB	Y		121	-	A-140	A-190	A-224
	5500	622	-	-	2200	9810	1H	6125DB	Y		121	-	A-140	A-190	A-224
	5790	654	1.19	I	3300	14700	1H	6130DC	Y	A	121	AV	A-142	A-192	A-226
			1.44	II	3300	14700	1H	6135DC	Y	B	121	AV	A-142	A-192	A-226
			1.45	II	3590	16000	1H	6140DB	Y	B	121	AV	A-142	A-192	A-226
			2.68	III	4960	22100	1H	6160DC	Y	C	121	AV	A-142	A-192	A-228
12.2	5570	630	-	-	2200	9810	1H	6125DB	Y		143	-	A-140	A-190	A-224
	6840	773	1.01	I	3300	14700	1H	6130DC	Y	A	143	AV	A-142	A-192	A-226
			1.22	I	3300	14700	1H	6135DC	Y	A	143	AV	A-142	A-192	A-226
			1.45	II	3590	16000	1H	6140DB	Y	B	143	AV	A-142	A-192	A-226
			2.27	III	4960	22100	1H	6160DC	Y	C	143	AV	A-142	A-192	A-228
10.6	5570	630	-	-	2200	9810	1H	6125DB	Y		165	-	A-140	A-190	A-224
	6900	780	-	-	3300	14700	1H	6130DC	Y		165	AV	A-142	A-192	A-226
	7880	891	1.05	I	3300	14700	1H	6135DC	Y	A	165	AV	A-142	A-192	A-226
			1.38	II	3590	16000	1H	6140DB	Y	B	165	AV	A-142	A-192	A-226
			1.45	II	3590	16000	1H	6145DB	Y	B	165	AV	A-142	A-192	A-226
			1.97	III	4960	22100	1H	6160DC	Y	C	165	AV	A-142	A-192	A-228
			2.36	III	4960	22100	1H	6165DC	Y	C	165	AV	A-142	A-192	A-228
8.97	6900	780	-	-	3300	14700	1H	6130DC	Y		195	AV	A-142	A-192	A-226
	8320	940	-	-	3300	14700	1H	6135DC	Y		195	AV	A-142	A-192	A-226
	9290	1050	1.17	I	3590	16000	1H	6140DB	Y	A	195	AV	A-142	A-192	A-226
			1.29	I	3590	16000	1H	6145DB	Y	A	195	AV	A-142	A-192	A-226
			1.68	III	4960	22100	1H	6160DC	Y	C	195	AV	A-142	A-192	A-228
			1.99	III	4960	22100	1H	6165DC	Y	C	195	AV	A-142	A-192	A-228
			2.40	III	6620	29500	1H	6170DC	Y	C	195	AV	A-142	A-192	A-228

Notes: [1] Refer to Technical Information Section for R1 and R2 model Overhung Load information.
[2] CNHM, CHHM, CNFM, CHFM, CNVM, CVVM are type designations, see page A-3.
[3] For Inverter Duty, single reduction, see pages A-154~163; double reduction, see pages A-164~175. For Single Phase, see page A-244.
[4] For Single Phase, see page A-245.
[5] For type CVFM, single reduction, see page A-219; double reduction, see page A-240.

1.5 HP, 1.1 kW, 60 Hz, 1750 RPM

Output Speed	Output Torque		Service Factor		Overhung Load[1]		Selection					Option	Dimension Page[2]		
RPM	in•lb	N•m	SF	AGMA Class	lb	N	HP Symbol	Frame Size	Shaft Spec.	AGMA Class	Ratio	Inverter Duty	CNHM CHHM[3]	CNVM CVVM[4]	CNFM CHFM[5]
7.58	8320	940	-	-	3300	14700	1H	6135DC	Y		231	AV	A-142	A-192	A-226
	10900	1230	-	-	3590	16000	1H	6140DB	Y		231	AV	A-142	A-192	A-226
	11100	1250	1.07	I	3590	16000	1H	6145DB	Y	A	231	AV	A-142	A-192	A-226
			1.41	II	4960	22100	1H	6160DC	Y	B	231	AV	A-142	A-192	A-228
			1.68	III	4960	22100	1H	6165DC	Y	C	231	AV	A-142	A-192	A-228
			2.03	III	6620	29500	1H	6170DC	Y	C	231	AV	A-142	A-192	A-228
			2.52	III	6620	29500	1H	6175DC	Y	C	231	AV	A-142	A-192	A-228
6.41	10900	1230	-	-	3590	16000	1H	6140DB	Y		273	AV	A-142	A-192	A-226
	11900	1340	-	-	3590	16000	1H	6145DB	Y		273	AV	A-142	A-192	A-226
	13000	1470	1.20	I	4960	22100	1H	6160DC	Y	A	273	AV	A-142	A-192	A-228
			1.42	II	4960	22100	1H	6165DC	Y	B	273	AV	A-142	A-192	A-228
			1.72	III	6620	29500	1H	6170DC	Y	C	273	AV	A-142	A-192	A-228
			2.14	III	6620	29500	1H	6175DC	Y	C	273	AV	A-142	A-192	A-228
5.49	10900	1230	-	-	3590	16000	1H	6140DB	Y		319	AV	A-142	A-192	A-226
	12100	1370	-	-	3550	15800	1H	6145DB	Y		319	AV	A-142	A-192	A-226
	15200	1720	1.02	I	4960	22100	1H	6160DC	Y	A	319	AV	A-142	A-192	A-228
			1.22	I	4960	22100	1H	6165DC	Y	A	319	AV	A-142	A-192	A-228
			1.47	II	6620	29500	1H	6170DC	Y	B	319	AV	A-142	A-192	A-228
			1.83	III	6620	29500	1H	6175DC	Y	C	319	AV8	A-142	A-192	A-228
			2.35	III	9360	41700	1H	6180DB	Y	C	319	-	A-142	A-192	A-230
4.64	15600	1760	-	-	4960	22100	1H	6160DC	Y		377	AV	A-142	A-192	A-228
	18000	2040	1.03	I	4960	22100	1H	6165DC	Y	A	377	AV	A-142	A-192	A-228
			1.24	I	6620	29500	1H	6170DC	Y	A	377	AV	A-142	A-192	A-228
			1.54	II	6620	29500	1H	6175DC	Y	B	377	AV	A-142	A-192	A-228
			1.99	III	9360	41700	1H	6180DB	Y	C	377	-	A-142	A-192	A-230
			2.45	III	9360	41700	1H	6185DB	Y	C	377	-	A-142	A-192	A-230
3.70	18600	2100	-	-	4960	22100	1H	6165DC	Y		473	AV	A-142	A-192	A-228
	22400	2530	-	-	6620	29500	1H	6170DC	Y		473	AV	A-142	A-192	A-228
	22700	2560	1.23	I	6620	29500	1H	6175DC	Y	A	473	AV	A-142	A-192	A-228
			1.59	II	9360	41700	1H	6180DB	Y	B	473	-	A-142	A-192	A-230
			1.96	III	9360	41700	1H	6185DB	Y	C	473	-	A-142	A-192	A-230
			2.50	III	13200	59000	1H	6190DA	Y	C	473	AV	A-142	A-192	A-230
3.13	18600	2100	-	-	4960	22100	1H	6165DC	Y		559	AV	A-142	A-192	A-228
	22400	2530	-	-	6620	29500	1H	6170DC	Y		559	AV	A-142	A-192	A-228
	26700	3020	1.04	I	6620	29500	1H	6175DC	Y	A	559	AV	A-142	A-192	A-228
			1.34	II	9360	41700	1H	6180DB	Y	B	559	-	A-142	A-192	A-230
			1.66	III	9360	41700	1H	6185DB	Y	C	559	-	A-142	A-192	A-230
			2.11	III	13200	59000	1H	6190DA	Y	C	559	AV	A-142	A-192	A-230
2.70	22400	2530	-	-	6620	29500	1H	6170DC	Y		649	AV	A-142	A-192	A-228
	27900	3150	-	-	6620	29500	1H	6175DC	Y		649	AV	A-142	A-192	A-228
	31100	3510	1.15	I	9360	41700	1H	6180DB	Y	A	649	-	A-142	A-192	A-230
			1.43	II	9360	41700	1H	6185DB	Y	B	649	-	A-142	A-192	A-230
			1.82	III	13200	59000	1H	6190DA	Y	C	649	AV	A-142	A-192	A-230
			2.27	III	13200	59000	1H	6195DA	Y	C	649	AV	A-142	A-192	A-230

Notes: [1] Refer to Technical Information Section for R1 and R2 model Overhung Load information.
[2] CNHM, CHHM, CNFM, CHFM, CNVM, CVVM are type designations, see page A-3.
[3] For Inverter Duty, single reduction, see pages A-154~163; double reduction, see pages A-164~175. For Single Phase, see page A-244.
[4] For Single Phase, see page A-245.
[5] For type CVFM, single reduction, see page A-219; double reduction, see page A-240.

SELECTION TABLES – 60 Hz

1.5 HP, 1.1 kW, 60 Hz, 1750 RPM

Output Speed	Output Torque		Service Factor		Overhung Load[1]		Selection					Option	Dimension Page[2]		
RPM	in•lb	N•m	SF	AGMA Class	lb	N	HP Symbol	Frame Size	Shaft Spec.	AGMA Class	Ratio	Inverter Duty	CNHM CHHM[3]	CNVM CVVM[4]	CNFM CHFM[5]
2.39	27900	3150	-	-	6620	29500	1H	6175DC	Y		731	AV	A-142	A-192	A-228
	34900	3950	1.03	I	9360	41700	1H	6180DB	Y	A	731	AV	A-142	A-192	A-230
			1.27	I	9360	41700	1H	6185DB	Y	A	731	AV	A-142	A-192	A-230
			1.62	III	13200	59000	1H	6190DA	Y	C	731	AV	A-142	A-192	A-230
			2.02	III	13200	59000	1H	6195DA	Y	C	731	AV	A-142	A-192	A-230
2.08	27900	3150	-	-	6620	29500	1H	6175DC	Y		841	AV	A-142	A-192	A-228
	35800	4050	-	-	9360	41700	1H	6180DB	Y		841	AV	A-142	A-192	A-230
	40200	4540	1.10	I	9360	41700	1H	6185DB	Y	A	841	AV	A-142	A-192	A-230
			1.40	II	13200	59000	1H	6190DA	Y	B	841	AV	A-142	A-192	A-230
			1.75	III	13200	59000	1H	6195DA	Y	C	841	AV	A-142	A-192	A-230
1.74	35800	4050	-	-	9360	41700	1H	6180DB	Y		1003	AV	A-142	A-192	A-230
	44200	5000	-	-	9340	41600	1H	6185DB	Y		1003	AV	A-142	A-192	A-230
	48000	5420	1.18	I	13200	58800	1H	6190DA	Y	A	1003	AV	A-142	A-192	A-230
			1.47	II	13200	58800	1H	6195DA	Y	B	1003	AV	A-142	A-192	A-230
1.40	44200	5000	-	-	9360	41700	1H	6185DB	Y		1247	AV	A-142	A-192	A-230
	56500	6380	-	-	13200	59000	1H	6190DA	Y		1247	AV	A-142	A-192	A-230
	59600	6740	1.18	I	13200	59000	1H	6195DA	Y	A	1247	AV	A-142	A-192	A-230
1.18	56500	6380	-	-	13200	58900	1H	6190DA	Y		1479	AV	A-142	A-192	A-230
	70700	7990	1.00	I	13100	58400	1H	6195DA	Y	A	1479	AV	A-142	A-192	A-230
0.946	70400	7960	-	-	13200	59000	1H	6195DA	Y		1849	AV	A-142	A-192	A-230
0.847	70400	7960	-	-	13000	58100	1H	6195DA	Y		2065	AV	A-142	A-192	A-230

2 HP, 1.5 kW, 60 Hz, 1750 RPM

Output Speed	Output Torque		Service Factor		Overhung Load[1]		Selection					Option	Dimension Page[2]		
RPM	in•lb	N•m	SF	AGMA Class	lb	N	HP Symbol	Frame Size	Shaft Spec.	AGMA Class	Ratio	Inverter Duty	CNHM CHHM[3]	CNVM CVVM[4]	CNFM CHFM[5]
292	413	46.7	1.01	I	591	2630	2	6095	Y	A	6	-	A-122	A-176	A-204
			1.57	II	871	3880	2	6100	Y	B	6	AV	A-122	A-176	A-204
			2.12	III	871	3880	2	6105	Y	C	6	AV	A-122	A-176	A-204
219	550	62.2	1.01	I	656	2920	2	6095	Y	A	8	-	A-122	A-176	A-204
			1.57	II	972	4330	2	6100	Y	B	8	AV	A-122	A-176	A-204
			2.12	III	972	4330	2	6105	Y	C	8	AV	A-122	A-176	A-204
159	757	85.5	1.01	I	741	3300	2	6095	Y	A	11	-	A-122	A-176	A-204
			1.57	II	1100	4920	2	6100	Y	B	11	AV	A-122	A-176	A-204
			2.12	III	1100	4920	2	6105	Y	C	11	AV	A-122	A-176	A-204
135	894	101	1.01	I	741	3300	2	6095	Y	A	13	-	A-122	A-176	A-204
			1.57	II	1150	5110	2	6100	Y	B	13	AV	A-122	A-176	A-204
			2.12	III	1150	5110	2	6105	Y	C	13	AV	A-122	A-176	A-204
117	1040	117	1.01	I	736	3280	2	6095	Y	A	15	-	A-122	A-176	A-204
			1.57	II	1210	5400	2	6100	Y	B	15	AV	A-122	A-176	A-204
			2.12	III	1210	5400	2	6105	Y	C	15	AV	A-122	A-176	A-204
103	1170	132	1.01	I	739	3290	2	6095	Y	A	17	-	A-122	A-176	A-204
			1.33	II	1210	5400	2	6100	Y	B	17	AV	A-122	A-176	A-204
			1.64	III	1210	5400	2	6105	Y	C	17	AV	A-122	A-176	A-204
			2.12	III	1400	6240	2	6110	Y	C	17	AV	A-126	A-176	A-204

Notes: [1] Refer to Technical Information Section for R1 and R2 model Overhung Load information.
[2] CNHM, CHHM, CNFM, CHFM, CNVM, CVVM are type designations, see page A-3.
[3] For Inverter Duty, single reduction, see pages A-154~163; double reduction, see pages A-164~175. For Single Phase, see page A-244.
[4] For Single Phase, see page A-245.
[5] For type CVFM, single reduction, see page A-219; double reduction, see page A-240.

2 HP, 1.5 kW, 60 Hz, 1750 RPM

Output Speed	Output Torque		Service Factor		Overhung Load[1]		Selection					Option	Dimension Page[2]		
RPM	in•lb	N•m	SF	AGMA Class	lb	N	HP Symbol	Frame Size	Shaft Spec.	AGMA Class	Ratio	Inverter Duty	CNHM CHHM[3]	CNVM CVVM[4]	CNFM CHFM[5]
83.3	1440	163	1.01	I	732	3260	2	6095	Y	A	21	-	A-122	A-176	A-204
			1.56	II	1210	5400	2	6105	Y	B	21	AV	A-122	A-176	A-204
			1.81	III	1490	6620	2	6110	Y	C	21	AV	A-126	A-176	A-204
70.0	1720	194	1.11	I	1210	5400	2	6105	Y	A	25	AV	A-122	A-176	A-204
			1.48	II	1510	6720	2	6115	Y	B	25	AV	A-126	A-176	A-204
			2.06	III	1830	8150	2	6120	Y	C	25	AV	A-126	A-176	A-204
60.3	2000	226	1.06	I	1210	5400	2	6105	Y	A	29	AV	A-122	A-176	A-204
			1.48	II	1550	6900	2	6115	Y	B	29	AV	A-126	A-176	A-204
			1.99	III	1900	8470	2	6120	Y	C	29	AV	A-126	A-176	A-204
50.0	2410	272	1.21	I	1650	7360	2	6115	Y	A	35	AV	A-126	A-176	A-204
			1.66	III	2010	8940	2	6120	Y	C	35	AV	A-126	A-176	A-204
			2.12	III	2010	8940	2	6125	Y	C	35	AV	A-126	A-176	A-204
40.7	2960	334	1.01	I	1710	7610	2	6115	Y	A	43	AV	A-126	A-176	A-204
			1.59	II	2140	9510	2	6125	Y	B	43	AV	A-126	A-176	A-204
			1.99	III	2510	11200	2	6130	Y	C	43	AV	A-128	A-180	A-208
34.3	3510	397	1.15	I	2200	9810	2	6120	Y	A	51	AV	A-126	A-176	A-204
			1.52	II	2200	9810	2	6125	Y	B	51	AV	A-126	A-176	A-204
			1.95	III	2630	11700	2	6135	Y	C	51	AV	A-128	A-180	A-208
			2.29	III	3590	16000	2	6140	Y	C	51	AV	A-128	A-180	A-208
29.7	4060	459	1.08	I	2200	9810	2	6125	Y	A	59	AV	A-126	A-176	A-204
			1.46	II	2740	12200	2	6130	Y	B	59	AV	A-128	A-180	A-208
			1.68	III	2740	12200	2	6135	Y	C	59	AV	A-128	A-180	A-208
			1.97	III	3590	16000	2	6140	Y	C	59	AV	A-128	A-180	A-208
24.6	4880	552	1.22	I	2900	12900	2	6130	Y	A	71	AV	A-128	A-180	A-208
			1.45	II	2900	12900	2	6135	Y	B	71	AV	A-128	A-180	A-208
			1.62	III	3590	16000	2	6140	Y	C	71	AV	A-128	A-180	A-208
			2.02	III	3590	16000	2	6145	Y	C	71	AV	A-128	A-180	A-208
20.1	5990	677	1.27	I	3120	13900	2	6135	Y	A	87	AV	A-128	A-180	A-208
			1.32	II	3590	16000	2	6140	Y	B	87	AV	A-128	A-180	A-208
			1.65	III	3590	16000	2	6145	Y	C	87	AV	A-128	A-180	A-208
			2.31	III	4960	22100	2	6160	Y	C	87	AV	A-128	A-180	A-208
16.8	5570	630	-	-	2200	9810	2	6125DB	Y		104	-	A-140	A-190	A-224
	6780	766	1.23	I	3300	14700	2	6135DC	Y	A	104	AV	A-142	A-192	A-226
			2.30	III	4960	22100	2	6160DC	Y	C	104	AV	A-142	A-192	A-228
14.5	6900	780	-	-	3300	14700	2	6130DC	Y		121	AV	A-142	A-192	A-226
	7880	891	1.05	I	3300	14700	2	6135DC	Y	A	121	AV	A-142	A-192	A-226
			1.07	I	3590	16000	2	6140DB	Y	A	121	AV	A-142	A-192	A-226
			1.97	III	4960	22100	2	6160DC	Y	C	121	AV	A-142	A-192	A-228
			2.36	III	4960	22100	2	6165DC	Y	C	121	AV	A-142	A-192	A-228
12.2	6900	780	-	-	3300	14700	2	6130DC	Y		143	AV	A-142	A-192	A-226
	8320	940	-	-	3300	14700	2	6135DC	Y		143	AV	A-142	A-192	A-226
	9290	1050	1.07	I	3590	16000	2	6140DB	Y	A	143	AV	A-142	A-192	A-226
			1.67	III	4960	22100	2	6160DC	Y	C	143	AV	A-142	A-192	A-228
			1.99	III	4960	22100	2	6165DC	Y	C	143	AV	A-142	A-192	A-228
			2.41	III	6620	29500	2	6170DC	Y	C	143	AV	A-142	A-192	A-228

Notes: [1] Refer to Technical Information Section for R1 and R2 model Overhung Load information.
[2] CNHM, CHHM, CNFM, CHFM, CNVM, CVVM are type designations, see page A-3.
[3] For Inverter Duty, single reduction, see pages A-154~163; double reduction, see pages A-164~175. For Single Phase, see page A-244.
[4] For Single Phase, see page A-245.
[5] For type CVFM, single reduction, see page A-219; double reduction, see page A-240.

SELECTION TABLES – 60 Hz

2 HP, 1.5 kW, 60 Hz, 1750 RPM

Output Speed	Output Torque		Service Factor		Overhung Load[1]		Selection					Option	Dimension Page[2]		
RPM	in•lb	N•m	SF	AGMA Class	lb	N	HP Symbol	Frame Size	Shaft Spec.	AGMA Class	Ratio	Inverter Duty	CNHM CHHM[3]	CNVM CVVM[4]	CNFM CHFM[5]
10.6	8320	940	-	-	3300	14700	2	6135DC	Y		165	AV	A-142	A-192	A226
	10800	1220	1.01	I	3590	16000	2	6140DB	Y	A	165	AV	A-142	A-192	A226
			1.07	I	3590	16000	2	6145DB	Y	A	165	AV	A-142	A-192	A226
			1.44	II	4960	22100	2	6160DC	Y	B	165	AV	A-142	A-192	A228
			1.73	III	4960	22100	2	6165DC	Y	C	165	AV	A-142	A-192	A228
			2.08	III	6620	29500	2	6170DC	Y	C	165	AV	A-142	A-192	A228
			2.58	III	6620	29500	2	6175DC	Y	C	165	AV	A-142	A-192	A228
8.97	10900	1230	-	-	3590	16000	2	6140DB	Y		195	AV	A-142	A-192	A226
	12000	1360	-	-	3590	16000	2	6145DB	Y		195	AV	A-142	A-192	A226
	12700	1440	1.22	I	4960	22100	2	6160DC	Y	A	195	AV	A-142	A-192	A228
			1.46	II	4960	22100	2	6165DC	Y	B	195	AV	A-142	A-192	A228
			1.76	III	6620	29500	2	6170DC	Y	C	195	AV	A-142	A-192	A228
			2.19	III	6620	29500	2	6175DC	Y	C	195	AV	A-142	A-192	A228
7.58	11900	1340	-	-	3590	16000	2	6145DB	Y		231	AV	A-142	A-192	A226
	15000	1700	1.24	I	4960	22100	2	6165DC	Y	A	231	AV	A-142	A-192	A228
			1.49	II	6620	29500	2	6170DC	Y	B	231	AV	A-142	A-192	A228
			1.85	III	6620	29500	2	6175DC	Y	C	231	AV	A-142	A-192	A228
			2.38	III	9360	41700	2	6180DB	Y	C	231	-	A-142	A-192	A230
6.41	15600	1760	-	-	4960	22100	2	6160DC	Y		273	AV	A-142	A-192	A228
	17800	2010	1.04	I	4960	22100	2	6165DC	Y	A	273	AV	A-142	A-192	A228
			1.26	I	6620	29500	2	6170DC	Y	A	273	AV	A-142	A-192	A228
			1.57	II	6620	29500	2	6175DC	Y	B	273	AV	A-142	A-192	A228
			2.01	III	9360	41700	2	6180DB	Y	C	273	AV	A-142	A-192	A230
			2.49	III	9360	41700	2	6185DB	Y	C	273	AV	A-142	A-192	A230
5.49	15600	1760	-	-	4960	22100	2	6160DC	Y		319	AV	A-142	A-192	A228
	18600	2100	-	-	4960	22100	2	6165DC	Y		319	AV	A-142	A-192	A228
	20800	2350	1.08	I	6620	29500	2	6170DC	Y	A	319	AV	A-142	A-192	A228
			1.34	II	6620	29500	2	6175DC	Y	B	319	AV	A-142	A-192	A228
			1.72	III	9360	41700	2	6180DB	Y	C	319	-	A-142	A-192	A230
			2.13	III	9360	41700	2	6185DB	Y	C	319	-	A-142	A-192	A230
4.64	18600	2100	-	-	4960	22100	2	6165DC	Y		377	AV	A-142	A-192	A228
	22400	2530	-	-	6620	29500	2	6170DC	Y		377	AV	A-142	A-192	A228
	24600	2780	1.13	I	6620	29500	2	6175DC	Y	A	377	AV	A-142	A-192	A228
			1.46	II	9360	41700	2	6180DB	Y	B	377	AV	A-142	A-192	A230
			1.80	III	9360	41700	2	6185DB	Y	C	377	AV	A-142	A-192	A230
			2.30	III	13200	59000	2	6190DA	Y	C	377	AV	A-142	A-192	A230
3.70	27900	3150	-	-	6620	29500	2	6175DC	Y		473	AV	A-142	A-192	A228
	30800	3480	1.17	I	9360	41700	2	6180DB	Y	A	473	-	A-142	A-192	A230
			1.43	II	9360	41700	2	6185DB	Y	B	473	-	A-142	A-192	A230
			1.83	III	13200	59000	2	6190DA	Y	C	473	AV	A-142	A-192	A230
			2.28	III	13200	59000	2	6195DA	Y	C	473	AV	A-142	A-192	A230
3.13	27900	3150	-	-	6620	29500	2	6175DC	Y		559	AV	A-142	A-192	A228
	35900	4060	-	-	9360	41700	2	6180DB	Y		559	AV	A-142	A-192	A230
	36500	4120	1.21	I	9360	41700	2	6185DB	Y	A	559	AV	A-142	A-192	A230
			1.55	II	13200	59000	2	6190DA	Y	B	559	AV	A-142	A-192	A230
			1.93	III	13200	59000	2	6195DA	Y	C	559	AV	A-142	A-192	A230

Notes: [1] Refer to Technical Information Section for R1 and R2 model Overhung Load information.
[2] CNHM, CHHM, CNFM, CHFM, CNVM, CVVM are type designations, see page A-3.
[3] For Inverter Duty, single reduction, see pages A-154~163; double reduction, see pages A-164~175. For Single Phase, see page A-244.
[4] For Single Phase, see page A-245.
[5] For type CVFM, single reduction, see page A-219; double reduction, see page A-240.

2 HP, 1.5 kW, 60 Hz, 1750 RPM

Output Speed	Output Torque		Service Factor		Overhung Load[1]		Selection					Option	Dimension Page[2]		
RPM	in•lb	N•m	SF	AGMA Class	lb	N	HP Symbol	Frame Size	Shaft Spec.	AGMA Class	Ratio	Inverter Duty	CNHM CHHM[3]	CNVM CVVM[4]	CNFM CHFM[5]
2.70	35800	4050	-	-	9360	41700	2	6180DB	Y		649	-	A-142	A-192	A-230
	42300	4780	1.05	I	9360	41700	2	6185DB	Y	A	649	-	A-142	A-192	A-230
			1.33	II	13200	59000	2	6190DA	Y	B	649	AV	A-142	A-192	A-230
			1.66	III	13200	59000	2	6195DA	Y	C	649	AV	A-142	A-192	A-230
2.39	35900	4060	-	-	9360	41700	2	6180DB	Y		731	AV	A-142	A-192	A-230
	44200	5000	-	-	9360	41700	2	6185DB	Y		731	AV	A-142	A-192	A-230
	47700	5390	1.18	I	13200	59000	2	6190DA	Y	A	731	AV	A-142	A-192	A-230
			1.48	II	13200	59000	2	6195DA	Y	B	731	AV	A-142	A-192	A-230
2.08	44200	5000	-	-	9360	41700	2	6185DB	Y		841	AV	A-142	A-192	A-230
	54900	6200	1.28	I	13200	59000	2	6195DA	Y	A	841	AV	A-142	A-192	A-230
1.74	56500	6380	-	-	13200	58600	2	6190DA	Y		1003	AV	A-142	A-192	A-230
	65400	7390	1.08	I	13100	58300	2	6195DA	Y	A	1003	AV	A-142	A-192	A-230
			1.26	I	18900	84100	2	6205DB	Y	A	1003	AV	A-146	A-196	A-232
1.40	70400	7960	-	-	13200	59000	2	6195DA	Y		1247	AV	A-142	A-192	A-230
	81300	9190	1.01	I	18900	84100	2	6205DB	Y	A	1247	AV	A-146	A-196	A-232
1.18	74000	8360	-	-	18900	84100	2	6205DA	Y		1479	AV	A-146	A-196	A-232
	77500	8760	-	-	18900	84100	2	6205DB	Y		1479	AV	A-146	A-196	A-232
	96400	10900	1.03	I	23400	104000	2	6215DA	Y	A	1479	AV	A-146	A-196	A-232
			1.39	II	32600	145000	2	6225DA	Y	B	1479	AV	A-146	A-196	A-232
0.946	82300	9300	-	-	18900	84100	2	6205DA	Y		1849	AV	A-146	A-196	A-232
	112000	12700	-	-	23400	104000	2	6215DA	Y		1849	AV	A-146	A-196	A-232
	120000	13600	1.17	I	32600	145000	2	6225DA	Y	A	1849	AV	A-146	A-196	A-232
0.847	82300	9300	-	-	18900	84100	2	6205DA	Y		2065	AV	A-146	A-196	A-232
	112000	12700	-	-	23400	104000	2	6215DA	Y		2065	AV	A-146	A-196	A-232
	134000	15200	1.04	I	32600	145000	2	6225DA	Y	A	2065	AV	A-146	A-196	A-232
0.690	112000	12700	-	-	23400	104000	2	6215DA	Y		2537	AV	A-146	A-196	A-232
	141000	15900	-	-	32600	145000	2	6225DA	Y		2537	AV	A-146	A-196	A-232
0.575	100000	11300	-	-	23400	104000	2	6215DA	Y		3045	AV	A-146	A-196	A-232
	134000	15100	-	-	32600	145000	2	6225DA	Y		3045	AV	A-146	A-196	A-232
0.503	112000	12700	-	-	23400	104000	2	6215DA	Y		3481	AV	A-146	A-196	A-232
	141000	15900	-	-	32600	145000	2	6225DA	Y		3481	AV	A-146	A-196	A-232
0.394	100000	11300	-	-	23400	104000	2	6215DA	Y		4437	AV	A-146	A-196	A-232
	134000	15100	-	-	32600	145000	2	6225DA	Y		4437	AV	A-146	A-196	A-232
0.341	112000	12700	-	-	23400	104000	2	6215DA	Y		5133	AV	A-146	A-196	A-232
	141000	15900	-	-	32600	145000	2	6225DA	Y		5133	AV	A-146	A-196	A-232
0.283	100000	11300	-	-	23400	104000	2	6215DA	Y		6177	AV	A-146	A-196	A-232
	134000	15100	-	-	32600	145000	2	6225DA	Y		6177	AV	A-146	A-196	A-232
0.231	100000	11300	-	-	23400	104000	2	6215DA	Y		7569	AV	A-146	A-196	A-232
	134000	15100	-	-	32600	145000	2	6225DA	Y		7569	AV	A-146	A-196	A-232

Notes: [1] Refer to Technical Information Section for R1 and R2 model Overhung Load information.
[2] CNHM, CHHM, CNFM, CHFM, CNVM, CVVM are type designations, see page A-3.
[3] For Inverter Duty, single reduction, see pages A-154~163; double reduction, see pages A-164~175. For Single Phase, see page A-244.
[4] For Single Phase, see page A-245.
[5] For type CVFM, single reduction, see page A-219; double reduction, see page A-240.

SELECTION TABLES – 60 Hz

3 HP, 2.2 kW, 60 Hz, 1750 RPM

Output Speed	Output Torque		Service Factor		Overhung Load[1]		Selection					Option	Dimension Page[2]		
RPM	in•lb	N•m	SF	AGMA Class	lb	N	HP Symbol	Frame Size	Shaft Spec.	AGMA Class	Ratio	Inverter Duty	CNHM CHHM[3]	CNVM CVVM[4]	CNFM CHFM[5]
292	605	68.4	1.07	I	867	3860	3	6100	Y	A	6	-	A-122	A-176	A-204
			1.45	II	867	3860	3	6105	Y	B	6	-	A-122	A-176	A-204
			1.61	III	981	4370	3	6110	Y	C	6	AV	A-126	A-176	A-204
			1.78	III	981	4370	3	6115	Y	C	6	AV	A-126	A-176	A-204
219	807	91.2	1.07	I	965	4300	3	6100	Y	A	8	-	A-122	A-176	A-204
			1.45	II	965	4300	3	6105	Y	B	8	-	A-122	A-176	A-204
			1.61	III	1090	4870	3	6110	Y	C	8	AV	A-126	A-176	A-204
			1.78	III	1090	4870	3	6115	Y	C	8	AV	A-126	A-176	A-204
159	1110	125	1.07	I	1090	4870	3	6100	Y	A	11	-	A-122	A-176	A-204
			1.45	II	1090	4870	3	6105	Y	B	11	-	A-122	A-176	A-204
			1.61	III	1250	5560	3	6110	Y	C	11	AV	A-126	A-176	A-204
			1.78	III	1250	5560	3	6115	Y	C	11	AV	A-126	A-176	A-204
135	1310	148	1.07	I	1140	5060	3	6100	Y	A	13	-	A-122	A-176	A-204
			1.45	II	1140	5060	3	6105	Y	B	13	-	A-122	A-176	A-204
			1.61	III	1290	5740	3	6110	Y	C	13	AV	A-126	A-176	A-204
			1.77	III	1290	5740	3	6115	Y	C	13	AV	A-126	A-176	A-204
117	1510	171	1.07	I	1200	5340	3	6100	Y	A	15	-	A-122	A-176	A-204
			1.45	II	1200	5340	3	6105	Y	B	15	-	A-122	A-176	A-204
			1.61	III	1370	6120	3	6110	Y	C	15	AV	A-126	A-176	A-204
			1.77	III	1370	6120	3	6115	Y	C	15	AV	A-126	A-176	A-204
103	1720	194	1.12	I	1210	5400	3	6105	Y	A	17	-	A-122	A-176	A-204
			1.45	II	1390	6180	3	6110	Y	B	17	AV	A-126	A-176	A-204
			1.77	III	1390	6180	3	6115	Y	C	17	AV	A-126	A-176	A-204
83.3	2120	240	1.06	I	1210	5400	3	6105	Y	A	21	-	A-122	A-176	A-204
			1.41	II	1470	6540	3	6115	Y	B	21	AV	A-126	A-176	A-204
			1.80	III	1730	7710	3	6120	Y	C	21	AV	A-126	A-176	A-204
70.0	2520	285	1.01	I	1490	6620	3	6115	Y	A	25	AV	A-126	A-176	A-204
			1.40	II	1810	8070	3	6120	Y	B	25	AV	A-126	A-176	A-204
			1.80	III	1810	8070	3	6125	Y	C	25	AV	A-126	A-176	A-204
60.3	2930	331	1.01	I	1530	6800	3	6115	Y	A	29	AV	A-126	A-176	A-204
			1.36	II	1880	8380	3	6120	Y	B	29	AV	A-126	A-176	A-204
			1.71	III	1880	8380	3	6125	Y	C	29	AV	A-126	A-176	A-204
			2.04	III	2210	9850	3	6130	Y	C	29	AV	A-128	A-180	A-208
50.0	3530	399	0.82	-	1620	7230	3	6115	Y		35	AV	A-126	A-180	A-204
			1.13	I	1980	8830	3	6120	Y	A	35	AV	A-126	A-180	A-204
			1.45	II	1980	8830	3	6125	Y	B	35	AV	A-126	A-180	A-204
			1.69	III	2310	10300	3	6130	Y	C	35	AV	A-128	A-180	A-208
			1.93	III	2310	10300	3	6135	Y	C	35	AV	A-128	A-180	A-208
40.7	4340	490	1.08	I	2110	9380	3	6125	Y	A	43	AV	A-126	A-180	A-204
			1.36	II	2490	11100	3	6130	Y	B	43	AV	A-128	A-180	A-208
			1.71	III	2490	11100	3	6135	Y	C	43	AV	A-128	A-180	A-208
			1.79	III	3570	15900	3	6140	Y	C	43	AV	A-128	A-180	A-208
34.3	5150	582	1.04	I	2190	9760	3	6125	Y	A	51	AV	A-126	A-180	A-208
			1.33	II	2580	11500	3	6135	Y	B	51	AV	A-128	A-180	A-208
			1.56	II	3590	16000	3	6140	Y	B	51	AV	A-128	A-180	A-208
			1.92	III	3590	16000	3	6145	Y	C	51	AV	A-128	A-180	A-208
			2.61	III	4510	20100	3	6160	Y	C	51	AV	A-128	A-180	A-208

Notes: [1] Refer to Technical Information Section for R1 and R2 model Overhung Load information.
[2] CNHM, CHHM, CNFM, CHFM, CNVM, CVVM are type designations, see page A-3.
[3] For Inverter Duty, single reduction, see pages A-154~163; double reduction, see pages A-164~175. For Single Phase, see page A-244.
[4] For Single Phase, see page A-245.
[5] For type CVFM, single reduction, see page A-219; double reduction, see page A-240.

3 HP, 2.2 kW, 60 Hz, 1750 RPM

Output Speed	Output Torque		Service Factor		Overhung Load[1]		Selection					Option	Dimension Page[2]		
RPM	in•lb	N•m	SF	AGMA Class	lb	N	HP Symbol	Frame Size	Shaft Spec.	AGMA Class	Ratio	Inverter Duty	CNHM CHHM[3]	CNVM CVVM[4]	CNFM CHFM[5]
29.7	5950	673	1.15	I	2720	12100	3	6135	Y	A	59	AV	A-128	A-180	A-208
			1.34	II	3590	16000	3	6140	Y	B	59	AV	A-128	A-180	A-208
			1.66	III	3590	16000	3	6145	Y	C	59	AV	A-128	A-180	A-208
			2.01	III	4960	22100	3	6160	Y	C	59	AV	A-128	A-180	A-208
24.6	7170	810	0.98	-	2870	12800	3	6135	Y		71	AV	A-128	A-180	A-208
			1.10	I	3590	16000	3	6140	Y	A	71	AV	A-128	A-180	A-208
			1.38	II	3590	16000	3	6145	Y	B	71	AV	A-128	A-180	A-208
			1.58	II	4960	22100	3	6160	Y	B	71	AV	A-128	A-180	A-208
			2.57	III	4960	22100	3	6165	Y	C	71	AV	A-128	A-180	A-208
20.1	8780	992	1.13	I	3590	16000	3	6145	Y	A	87	AV	A-128	A-180	A-208
			1.58	II	4960	22100	3	6160	Y	B	87	AV	A-128	A-180	A-208
			1.77	III	4960	22100	3	6165	Y	C	87	AV	A-128	A-180	A-208
16.8	6900	780	-	-	3300	14700	3	6130DC	Y		104	-	A-142	A-192	A-226
	8320	940	-	-	3300	14700	3	6135DC	Y		104	-	A-142	A-192	A-226
	9910	1120	1.57	II	4960	22100	3	6160DC	Y	B	104	AV	A-142	A-192	A-228
			1.87	III	4960	22100	3	6165DC	Y	C	104	AV	A-142	A-192	A-228
			2.25	III	6600	29400	3	6170DC	Y	C	104	AV	A-142	A-192	A-228
14.5	8320	940	-	-	3300	14700	3	6135DC	Y		121	-	A-142	A-192	A-226
	11600	1310	1.34	II	4960	22100	3	6160DC	Y	B	121	AV	A-142	A-192	A-228
			1.60	III	4960	22100	3	6165DC	Y	C	121	AV	A-142	A-192	A-228
			1.94	III	6620	29500	3	6170DC	Y	C	121	AV	A-142	A-192	A-228
			2.41	III	6620	29500	3	6175DC	Y	C	121	AV	A-142	A-192	A-228
12.2	13700	1550	1.14	I	4960	22100	3	6160DC	Y	A	143	AV	A-142	A-192	A-228
			1.36	II	4960	22100	3	6165DC	Y	B	143	AV	A-142	A-192	A-228
			1.63	III	6620	29500	3	6170DC	Y	C	143	AV	A-142	A-192	A-228
			2.04	III	6620	29500	3	6175DC	Y	C	143	AV	A-142	A-192	A-228
			2.63	III	9360	41700	3	6180DB	Y	C	143	AV	A-142	A-192	A-230
10.6	15600	1760	-	-	4960	22100	3	6160DC	Y		165	AV	A-142	A-192	A-228
	15700	1780	1.18	I	4960	22100	3	6165DC	Y	A	165	AV	A-142	A-192	A-228
			1.42	II	6620	29500	3	6170DC	Y	B	165	AV	A-142	A-192	A-228
			1.77	III	6620	29500	3	6175DC	Y	C	165	AV	A-142	A-192	A-228
			2.28	III	9360	41700	3	6180DB	Y	C	165	AV	A-142	A-192	A-230
8.97	15600	1760	-	-	4960	22100	3	6160DC	Y		195	AV	A-142	A-192	A-228
	18700	2110	1.00	I	4960	22100	3	6165DC	Y	A	195	AV	A-142	A-192	A-228
			1.50	II	6620	29500	3	6175DC	Y	B	195	AV	A-142	A-192	A-228
			1.93	III	9360	41700	3	6180DB	Y	C	195	AV	A-142	A-192	A-230
			2.34	III	9360	41700	3	6185DB	Y	C	195	AV	A-142	A-192	A-230
7.58	15600	1760	-	-	4960	22100	3	6160DC	Y		231	AV	A-142	A-192	A-228
	18600	2100	-	-	4960	22100	3	6165DC	Y		231	AV	A-142	A-192	A-228
	22100	2500	1.26	I	6620	29500	3	6175DC	Y	A	231	AV	A-142	A-192	A-228
			1.62	III	9360	41700	3	6180DB	Y	C	231	AV	A-142	A-192	A-230
			2.00	III	9360	41700	3	6185DB	Y	C	231	AV	A-142	A-192	A-230
			2.56	III	13200	59000	3	6190DA	Y	C	231	AV	A-142	A-192	A-230

Notes: [1] Refer to Technical Information Section for R1 and R2 model Overhung Load information.
[2] CNHM, CHHM, CNFM, CHFM, CNVM, CVVM are type designations, see page A-3.
[3] For Inverter Duty, single reduction, see pages A-154~163; double reduction, see pages A-164~175. For Single Phase, see page A-244.
[4] For Single Phase, see page A-245.
[5] For type CVFM, single reduction, see page A-219; double reduction, see page A-240.

SELECTION TABLES – 60 Hz

3 HP, 2.2 kW, 60 Hz, 1750 RPM

Output Speed	Output Torque		Service Factor		Overhung Load[1]		Selection					Option	Dimension Page[2]		
RPM	in•lb	N•m	SF	AGMA Class	lb	N	HP Symbol	Frame Size	Shaft Spec.	AGMA Class	Ratio	Inverter Duty	CNHM CHHM[3]	CNVM CVVM[4]	CNFM CHFM[5]
6.41	18600	2100	-	-	4960	22100	3	6165DC	Y		273	AV	A-142	A-192	A-228
	22400	2530	-	-	6620	29500	3	6170DC	Y		273	AV	A-142	A-192	A-228
	26100	2950	1.07	I	6620	29500	3	6175DC	Y	A	273	AV	A-142	A-192	A-228
			1.37	II	9360	41700	3	6180DB	Y	B	273	AV	A-142	A-192	A-230
			1.69	III	9360	41700	3	6185DB	Y	C	273	AV	A-142	A-192	A-230
			2.16	III	13200	59000	3	6190DA	Y	C	273	AV	A-142	A-192	A-230
5.49	22400	2530	-	-	6620	29500	3	6170DC	Y		319	AV	A-142	A-192	A-228
	27900	3150	-	-	6620	29500	3	6175DC	Y		319	AV	A-142	A-192	A-228
	30500	3450	1.17	I	9360	41700	3	6180DB	Y	A	319	AV	A-142	A-192	A-230
			1.45	II	9360	41700	3	6185DB	Y	B	319	AV	A-142	A-192	A-230
			1.85	III	13200	59000	3	6190DA	Y	C	319	AV	A-142	A-192	A-230
			2.31	III	13200	59000	3	6195DA	Y	C	319	AV	A-142	A-192	A-230
4.64	27900	3150	-	-	6620	29500	3	6175DC	Y		377	AV	A-142	A-192	A-228
	35800	4050	-	-	9360	41700	3	6180DB	Y		377	AV	A-142	A-192	A-230
	36000	4070	1.23	I	9360	41700	3	6185DB	Y	A	377	AV	A-142	A-192	A-230
			1.57	II	13200	59000	3	6190DA	Y	B	377	AV	A-142	A-192	A-230
			1.95	III	13200	59000	3	6195DA	Y	C	377	AV	A-142	A-192	A-230
			2.27	III	18900	84100	3	6205DB	Y	C	377	AV	A-146	A-196	A-232
3.70	35900	4060	-	-	9360	41700	3	6180DB	Y		473	AV	A-142	A-192	A-230
	45200	5110	0.98	-	9360	41700	3	6185DB	Y		473	AV	A-142	A-192	A-230
			1.25	I	13200	59000	3	6190DA	Y	A	473	AV	A-142	A-192	A-230
			1.56	II	13200	59000	3	6195DA	Y	B	473	AV	A-142	A-192	A-230
			1.82	III	18900	84100	3	6205DB	Y	C	473	AV	A-146	A-196	A-232
			2.48	III	23400	104000	3	6215DA	Y	C	473	AV	A-146	A-196	A-232
3.13	44200	5000	-	-	9360	41700	3	6185DB	Y		559	AV	A-142	A-192	A-230
	53400	6040	1.06	I	13200	59000	3	6190DA	Y	A	559	AV	A-142	A-192	A-230
			1.32	II	13200	59000	3	6195DA	Y	B	559	AV	A-142	A-192	A-230
			2.09	III	23400	104000	3	6215DA	Y	C	559	AV	A-146	A-196	A-232
			2.65	III	32600	145000	3	6225DA	Y	C	559	AV	A-146	A-196	A-232
2.70	44200	5000	-	-	9340	41600	3	6185DB	Y		649	AV	A-142	A-192	A-230
	56500	6380	-	-	13200	58600	3	6190DA	Y		649	AV	A-142	A-192	A-230
	62000	7010	1.14	I	13100	58400	3	6195DA	Y	A	649	AV	A-142	A-192	A-230
			1.33	II	18900	84100	3	6205DB	Y	B	649	AV	A-146	A-196	A-232
			1.80	III	23400	104000	3	6215DA	Y	C	649	AV	A-146	A-196	A-232
			2.26	III	32600	145000	3	6225DA	Y	C	649	AV	A-146	A-196	A-232
2.39	56500	6380	-	-	13200	59000	3	6190DA	Y		731	AV	A-142	A-192	A-230
	69900	7900	1.01	I	13200	59000	3	6195DA	Y	A	731	AV	A-142	A-192	A-230
			1.18	I	18900	84100	3	6205DB	Y	A	731	AV	A-146	A-196	A-232
			1.60	III	23400	104000	3	6215DA	Y	C	731	AV	A-146	A-196	A-232
			2.03	III	32600	145000	3	6225DA	Y	C	731	AV	A-146	A-196	A-232
			2.60	III	40200	179000	3	6235DA	Y	C	731	AV	A-146	A-196	A-236
2.08	56500	6380	-	-	13200	59000	3	6190DA	Y		841	AV	A-142	A-192	A-230
	70400	7960	-	-	13200	59000	3	6195DA	Y		841	AV	A-142	A-192	A-230
	80400	9090	1.02	I	18900	84100	3	6205DA	Y	A	841	AV	A-146	A-196	A-232
			1.39	II	23400	104000	3	6215DA	Y	B	841	AV	A-146	A-196	A-232
			1.65	III	32600	145000	3	6225DA	Y	C	841	AV	A-146	A-196	A-232
			2.08	III	40200	179000	3	6235DA	Y	C	841	AV	A-146	A-196	A-236
			2.84	III	46700	208000	3	6245DA	Y	C	841	AV	A-150	A-200	A-236

Notes: [1] Refer to Technical Information Section for R1 and R2 model Overhung Load information.
[2] CNHM, CHHM, CNFM, CHFM, CNVM, CVVM are type designations, see page A-3.
[3] For Inverter Duty, single reduction, see pages A-154~163; double reduction, see pages A-164~175. For Single Phase, see page A-244.
[4] For Single Phase, see page A-245.
[5] For type CVFM, single reduction, see page A-219; double reduction, see page A-240.

3 HP, 2.2 kW, 60 Hz, 1750 RPM

Output Speed	Output Torque		Service Factor		Overhung Load[1]		Selection					Option	Dimension Page[2]		
RPM	in•lb	N•m	SF	AGMA Class	lb	N	HP Symbol	Frame Size	Shaft Spec.	AGMA Class	Ratio	Inverter Duty	CNHM CHHM[3]	CNVM CVVM[4]	CNFM CHFM[5]
1.74	70400	7960	-	-	13000	58100	3	6195DA	Y		1003	AV	A-142	A-192	A-230
	80200	9060	-	-	18900	84100	3	6205DA	Y		1003	AV	A-146	A-196	A-232
	82300	9300	-	-	18900	84100	3	6205DB	Y		1003	AV	A-146	A-196	A-232
	95600	10800	1.17	I	23400	104000	3	6215DA	Y	A	1003	AV	A-146	A-196	A-232
			1.46	II	32600	145000	3	6225DA	Y	B	1003	AV	A-146	A-196	A-232
			1.89	III	40200	179000	3	6235DA	Y	C	1003	AV	A-146	A-196	A-236
			2.38	III	46700	208000	3	6245DA	Y	C	1003	AV	A-150	A-200	A-236
1.40	82300	9300	-	-	18900	84100	3	6205DA	Y		1247	AV	A-146	A-196	A-232
	112000	12700	-	-	23400	104000	3	6215DA	Y		1247	AV	A-146	A-196	A-232
	119000	13500	1.19	I	32600	145000	3	6225DA	Y	A	1247	AV	A-146	A-196	A-232
			1.52	II	40200	179000	3	6235DA	Y	B	1247	AV	A-146	A-196	A-236
			1.91	III	46700	208000	3	6245DA	Y	C	1247	AV	A-150	A-200	A-236
1.18	100000	11300	-	-	23400	104000	3	6215DA	Y		1479	AV	A-146	A-196	A-232
	134000	15100	-	-	32600	145000	3	6225DA	Y		1479	AV	A-146	A-196	A-232
	142000	16000	1.07	I	40200	179000	3	6235DA	Y	A	1479	AV	A-146	A-196	A-236
			1.42	II	46700	208000	3	6245DA	Y	B	1479	AV	A-150	A-200	A-236
0.946	142000	16000	-	-	32600	145000	3	6225DA	Y		1849	AV	A-146	A-196	A-232
	177000	20000	1.03	I	40200	179000	3	6235DA	Y	A	1849	AV	A-146	A-196	A-236
			1.29	I	46700	208000	3	6245DA	Y	A	1849	AV	A-150	A-200	A-236
0.847	141000	15900	-	-	32600	145000	3	6225DA	Y		2065	AV	A-146	A-196	A-232
	181000	20500	-	-	40200	179000	3	6235DA	Y		2065	AV	A-146	A-196	A-236
	197000	22300	1.16	I	46700	208000	3	6245DA	Y	A	2065	AV	A-150	A-200	A-236
0.690	181000	20500	-	-	40200	179000	3	6235DA	Y		2537	AV	A-146	A-196	A-236
	228000	25800	-	-	46700	208000	3	6245DA	Y		2537	AV	A-150	A-200	A-236
0.575	152000	17200	-	-	40200	179000	3	6235DA	Y		3045	AV	A-146	A-196	A-236
	200000	22600	-	-	46700	208000	3	6245DA	Y		3045	AV	A-150	A-200	A-236
0.503	181000	20500	-	-	40200	179000	3	6235DA	Y		3481	AV	A-146	A-196	A-236
	228000	25800	-	-	46700	208000	3	6245DA	Y		3481	AV	A-150	A-200	A-236
0.394	152000	17200	-	-	40200	179000	3	6235DA	Y		4437	AV	A-146	A-196	A-236
	200000	22600	-	-	46700	208000	3	6245DA	Y		4437	AV	A-150	A-200	A-236
0.341	181000	20500	-	-	40200	179000	3	6235DA	Y		5133	AV	A-146	A-196	A-236
	228000	25800	-	-	46700	208000	3	6245DA	Y		5133	AV	A-150	A-200	A-236
0.283	152000	17200	-	-	40200	179000	3	6235DA	Y		6177	AV	A-146	A-196	A-236
	200000	22600	-	-	46700	208000	3	6245DA	Y		6177	AV	A-150	A-200	A-236
0.231	152000	17200	-	-	40200	179000	3	6235DA	Y		7569	AV	A-146	A-196	A-236
	200000	22600	-	-	46700	208000	3	6245DA	Y		7569	AV	A-150	A-200	A-236

Notes: [1] Refer to Technical Information Section for R1 and R2 model Overhung Load information.
[2] CNHM, CHHM, CNFM, CHFM, CNVM, CVVM are type designations, see page A-3.
[3] For Inverter Duty, single reduction, see pages A-154~163; double reduction, see pages A-164~175. For Single Phase, see page A-244.
[4] For Single Phase, see page A-245.
[5] For type CVFM, single reduction, see page A-219; double reduction, see page A-240.

SELECTION TABLES – 60 Hz

5 HP, 3.7 kW, 60 Hz, 1750 RPM

Output Speed	Output Torque		Service Factor		Overhung Load[1]		Selection					Option	Dimension Page[2]		
RPM	in•lb	N•m	SF	AGMA Class	lb	N	HP Symbol	Frame Size	Shaft Spec.	AGMA Class	Ratio	Inverter Duty	CNHM CHHM[3]	CNVM CVVM[4]	CNFM CHFM[5]
292	1020	115	1.06	I	970	4320	5	6115	Y	A	6	-	A-126	A-176	A-204
			1.37	II	1100	4910	5	6120	Y	B	6	AV	A-126	A-176	A-204
			1.57	II	1100	4910	5	6125	Y	B	6	AV	A-126	A-176	A-204
			2.54	III	1260	5590	5	6130	Y	C	6	AV	A-128	A-180	A-208
219	1350	153	1.06	I	1080	4800	5	6115	Y	A	8	-	A-126	A-176	A-204
			1.37	II	1230	5470	5	6120	Y	B	8	AV	A-126	A-176	A-204
			1.88	III	1230	5470	5	6125	Y	C	8	AV	A-126	A-176	A-204
159	1870	211	1.06	I	1230	5460	5	6115	Y	A	11	-	A-126	A-176	A-204
			1.37	II	1390	6200	5	6120	Y	B	11	AV	A-126	A-176	A-204
			1.60	III	1390	6200	5	6125	Y	C	11	AV	A-126	A-176	A-204
			2.54	III	1640	7320	5	6130	Y	C	11	AV	A-128	A-180	A-208
135	2200	249	1.05	I	1270	5640	5	6115	Y	A	13	-	A-126	A-176	A-204
			1.37	II	1440	6400	5	6120	Y	B	13	AV	A-126	A-176	A-204
			1.60	III	1440	6400	5	6125	Y	C	13	AV	A-126	A-176	A-204
			2.54	III	1710	7620	5	6130	Y	C	13	AV	A-128	A-180	A-208
117	2550	288	1.05	I	1340	5990	5	6115	Y	A	15	-	A-126	A-176	A-204
			1.37	II	1540	6860	5	6120	Y	B	15	AV	A-126	A-176	A-204
			1.60	III	1540	6860	5	6125	Y	C	15	AV	A-126	A-176	A-204
			2.10	III	1740	7770	5	6130	Y	C	15	AV	A-128	A-180	A-208
103	2880	326	1.05	I	1360	6040	5	6115	Y	A	17	-	A-126	A-176	A-204
			1.53	II	1550	6920	5	6125	Y	B	17	AV	A-126	A-176	A-204
			1.96	III	1870	8340	5	6130	Y	C	17	AV	A-128	A-180	A-208
83.3	3570	403	0.84	-	1430	6350	5	6115	Y		21	-	A-126	A-176	A-204
			1.07	I	1690	7540	5	6120	Y	A	21	AV	A-126	A-176	A-204
			1.32	II	1700	7570	5	6125	Y	B	21	AV	A-126	A-176	A-204
			1.66	III	2000	8900	5	6130	Y	C	21	AV	A-128	A-180	A-208
			2.04	III	2000	8900	5	6135	Y	C	21	AV	A-128	A-180	A-208
70.0	4250	480	1.07	I	1770	7900	5	6125	Y	A	25	AV	A-126	A-176	A-204
			1.39	II	2040	9100	5	6130	Y	B	25	AV	A-128	A-180	A-208
			1.61	III	2070	9240	5	6135	Y	C	25	AV	A-128	A-180	A-208
			1.86	III	3100	13800	5	6140	Y	C	25	AV	A-128	A-180	A-208
60.3	4920	556	1.02	I	1840	8180	5	6125	Y	A	29	AV	A-126	A-176	A-204
			1.21	I	2180	9700	5	6130	Y	A	29	AV	A-128	A-180	A-208
			1.53	II	2180	9700	5	6135	Y	B	29	AV	A-128	A-180	A-208
			1.61	III	3190	14200	5	6140	Y	C	29	AV	A-128	A-180	A-208
			2.04	III	3190	14200	5	6145	Y	C	29	AV	A-128	A-180	A-208
50.0	5940	671	1.15	I	2290	10200	5	6135	Y	A	35	AV	A-128	A-180	A-208
			1.41	II	3390	15100	5	6140	Y	B	35	AV	A-128	A-180	A-208
			2.04	III	3390	15100	5	6145	Y	C	35	AV	A-128	A-180	A-208
			2.61	III	4020	17900	5	6160	Y	C	35	AV	A-128	A-180	A-208
40.7	7300	825	1.02	I	2450	10900	5	6135	Y	A	43	AV	A-128	A-180	A-208
			1.46	II	3550	15800	5	6145	Y	B	43	AV	A-128	A-180	A-208
			2.01	III	4310	19200	5	6160	Y	C	43	AV	A-128	A-180	A-208
			2.14	III	4310	19200	5	6165	Y	C	43	AV	A-128	A-180	A-208
34.3	8650	978	1.14	I	3590	16000	5	6145	Y	A	51	AV	A-128	A-180	A-208
			1.55	II	4470	19900	5	6160	Y	B	51	AV	A-128	A-180	A-208
			2.04	III	4470	19900	5	6165	Y	C	51	AV	A-128	A-180	A-208
29.7	10000	1130	1.19	I	4960	22100	5	6160	Y	A	59	AV	A-128	A-180	A-208
			1.55	II	4960	22100	5	6165	Y	B	59	AV	A-128	A-180	A-208
			1.93	III	5320	23700	5	6170	Y	C	59	AV	A-132	A-180	A-210

Notes: [1] Refer to Technical Information Section for R1 and R2 model Overhung Load information.
[2] CNHM, CHHM, CNFM, CHFM, CNVM, CVVM are type designations, see page A-3.
[3] For Inverter Duty, single reduction, see pages A-154~163; double reduction, see pages A-164~175. For Single Phase, see page A-244.
[4] For Single Phase, see page A-245.
[5] For type CVFM, single reduction, see page A-219; double reduction, see page A-240.

5 HP, 3.7 kW, 60 Hz, 1750 RPM

Output Speed	Output Torque		Service Factor		Overhung Load[1]		Selection					Option	Dimension Page[2]		
RPM	in•lb	N•m	SF	AGMA Class	lb	N	HP Symbol	Frame Size	Shaft Spec.	AGMA Class	Ratio	Inverter Duty	CNHM CHHM[3]	CNVM CVVM[4]	CNFM CHFM[5]
24.6	12000	1360	0.94	-	4920	21900	5	6160	Y		71	AV	A-128	A-180	A-208
			1.53	II	4920	21900	5	6165	Y	B	71	AV	A-128	A-180	A-208
			1.60	III	5610	25000	5	6170	Y	C	71	AV	A-132	A-180	A-210
			1.93	III	5610	25000	5	6175	Y	C	71	AV	A-132	A-180	A-210
20.1	14800	1670	1.05	I	4890	21800	5	6165	Y	A	87	AV	A-128	A-180	A-208
			1.52	II	6020	26800	5	6175	Y	B	87	AV	A-132	A-180	A-210
			1.93	III	8130	36200	5	6180	Y	C	87	-	A-132	A-180	A-210
16.8	15600	1760	-	-	4960	22100	5	6160DC	Y		104	AV	A-142	A-192	A-228
	16700	1890	1.11	I	4960	22100	5	6165DC	Y	A	104	AV	A-142	A-192	A-228
			1.34	II	6510	29000	5	6170DC	Y	B	104	AV	A-142	A-192	A-228
			1.67	III	6510	29000	5	6175DC	Y	C	104	AV	A-142	A-192	A-228
			2.15	III	8640	38500	5	6180DB	Y	C	104	AV	A-142	A-192	A-230
14.5	18600	2100	-	-	4960	22100	5	6165DC	Y		121	AV	A-142	A-192	A-228
	19500	2200	1.15	I	6620	29500	5	6170DC	Y	A	121	AV	A-142	A-192	A-228
			1.43	II	6620	29500	5	6175DC	Y	B	121	AV	A-142	A-192	A-228
			1.85	III	9210	41000	5	6180DB	Y	C	121	AV	A-142	A-192	A-230
			2.19	III	9210	41000	5	6185DB	Y	C	121	AV	A-142	A-192	A-230
12.2	22400	2530	-	-	6620	29500	5	6170DC	Y		143	AV	A-142	A-192	A-228
	23000	2600	1.21	I	6620	29500	5	6175DC	Y	A	143	AV	A-142	A-192	A-228
			1.56	II	9360	41700	5	6180DB	Y	B	143	AV	A-142	A-192	A-230
			1.89	III	9360	41700	5	6185DB	Y	C	143	AV	A-142	A-192	A-230
			2.46	III	13200	59000	5	6190DB	Y	C	143	AV	A-142	A-192	A-230
10.6	22400	2530	-	-	6620	29500	5	6170DC	Y		165	AV	A-142	A-192	A-228
	26500	3000	1.05	I	6620	29500	5	6175DC	Y	A	165	AV	A-142	A-192	A-228
			1.35	II	9360	41700	5	6180DB	Y	B	165	AV	A-142	A-192	A-230
			1.64	III	9360	41700	5	6185DB	Y	C	165	AV	A-142	A-192	A-230
			1.69	III	13200	59000	5	6190DA	Y	C	165	AV	A-142	A-192	A-230
			2.13	III	13200	59000	5	6190DB	Y	C	165	AV	A-142	A-192	A-230
8.97	27900	3150	-	-	6620	29500	5	6175DC	Y		195	AV	A-142	A-192	A-228
	31300	3540	1.15	I	9360	41700	5	6180DB	Y	A	195	AV	A-142	A-192	A-230
			1.39	II	9360	41700	5	6185DB	Y	B	195	AV	A-142	A-192	A-230
			1.69	III	13200	59000	5	6190DA	Y	C	195	AV	A-142	A-192	A-230
			2.23	III	13200	59000	5	6195DB	Y	C	195	AV	A-142	A-192	A-230
7.58	35800	4050	-	-	9360	41700	5	6180DB	Y		231	AV	A-142	A-192	A-230
	37200	4200	1.19	I	9360	41700	5	6185DB	Y	A	231	AV	A-142	A-192	A-230
			1.52	II	13200	59000	5	6190DA	Y	B	231	AV	A-142	A-192	A-230
			1.69	III	13200	59000	5	6195DA	Y	C	231	AV	A-142	A-192	A-230
			2.21	III	18900	84100	5	6205DB	Y	C	231	AV	A-146	A-196	A-232
6.41	35800	4050	-	-	9360	41700	5	6180DB	Y		273	AV	A-142	A-192	A-230
	43900	4960	1.01	I	9360	41700	5	6185DB	Y	A	273	AV	A-142	A-192	A-230
			1.29	I	13200	59000	5	6190DA	Y	A	273	AV	A-142	A-192	A-230
			1.60	III	13200	59000	5	6195DA	Y	C	273	AV	A-142	A-192	A-230
			2.52	III	23400	104000	5	6215DA	Y	C	273	AV	A-146	A-196	A-232
5.49	44200	5000	-	-	9360	41700	5	6185DB	Y		319	AV	A-142	A-192	A-230
	51300	5800	1.10	I	13200	59000	5	6190DA	Y	A	319	AV	A-142	A-192	A-230
			1.37	II	13200	59000	5	6195DA	Y	B	319	AV	A-142	A-192	A-230
			1.59	II	18900	84100	5	6205DB	Y	B	319	AV	A-146	A-196	A-232
			2.18	III	23400	104000	5	6215DA	Y	C	319	AV	A-146	A-196	A-232

Notes: [1] Refer to Technical Information Section for R1 and R2 model Overhung Load information.
[2] CNHM, CHHM, CNFM, CHFM, CNVM, CVVM are type designations, see page A-3.
[3] For Inverter Duty, single reduction, see pages A-154~163; double reduction, see pages A-164~175. For Single Phase, see page A-244.
[4] For Single Phase, see page A-245.
[5] For type CVFM, single reduction, see page A-219; double reduction, see page A-240.

SELECTION TABLES – 60 Hz

5 HP, 3.7 kW, 60 Hz, 1750 RPM

Output Speed	Output Torque		Service Factor		Overhung Load[1]		Selection					Option	Dimension Page[2]		
RPM	in•lb	N•m	SF	AGMA Class	lb	N	HP Symbol	Frame Size	Shaft Spec.	AGMA Class	Ratio	Inverter Duty	CNHM CHHM[3]	CNVM CVVM[4]	CNFM CHFM[5]
4.64	56500	6380	-	-	13200	59000	5	6190DA	Y		377	AV	A-142	A-192	A-230
	60600	6850	1.16	I	13200	59000	5	6195DA	Y	A	377	AV	A-142	A-192	A-230
			1.17	I	18900	84100	5	6205DA	Y	A	377	AV	A-146	A-196	A-232
			1.35	II	18900	84100	5	6205DB	Y	B	377	AV	A-146	A-196	A-232
			1.85	III	23400	104000	5	6215DA	Y	C	377	AV	A-146	A-196	A-232
			2.20	III	32600	145000	5	6225DA	Y	C	377	AV	A-146	A-196	A-232
3.70	70400	7960	-	-	13200	59000	5	6195DB	Y		473	AV	A-142	A-192	A-230
	76100	8600	0.90	-	18900	84100	5	6205DA	Y		473	AV	A-146	A-196	A-232
			1.08	I	18900	84100	5	6205DB	Y	A	473	AV	A-146	A-196	A-232
			1.47	II	23400	104000	5	6215DA	Y	B	473	AV	A-146	A-196	A-232
			1.86	III	32600	145000	5	6225DA	Y	C	473	AV	A-146	A-196	A-232
			2.38	III	40200	179000	5	6235DA	Y	C	473	-	A-146	A-196	A-236
3.13	90200	10200	1.25	I	23400	104000	5	6215DA	Y	A	559	AV	A-146	A-196	A-232
			1.58	II	32600	145000	5	6225DA	Y	B	559	AV	A-146	A-196	A-232
			2.02	III	40200	179000	5	6235DA	Y	C	559	-	A-146	A-196	A-236
			2.54	III	46700	208000	5	6245DA	Y	C	559	-	A-150	A-200	A-236
2.70	104000	11800	1.07	I	23400	104000	5	6215DA	Y	A	649	AV	A-146	A-196	A-232
			1.35	II	32600	145000	5	6225DA	Y	B	649	AV	A-146	A-196	A-232
			1.74	III	40200	179000	5	6235DA	Y	C	649	-	A-146	A-196	A-236
			2.19	III	46700	208000	5	6245DA	Y	C	649	-	A-150	A-200	A-236
2.39	112000	12700	-	-	23400	104000	5	6215DA	Y		731	AV	A-146	A-196	A-232
	118000	13300	1.20	I	32600	145000	5	6225DA	Y	A	731	AV	A-146	A-196	A-232
			1.54	II	40200	179000	5	6235DA	Y	B	731	AV	A-146	A-196	A-236
			1.94	III	46700	208000	5	6245DA	Y	C	731	AV	A-150	A-200	A-236
			2.60	III	57900	258000	5	6255DA	Y	C	731	-	A-150	A-200	A-236
2.08	112000	12700	-	-	23400	104000	5	6215DA	Y		841	AV	A-146	A-196	A-232
	135000	15300	0.98	-	32600	145000	5	6225DA	Y		841	AV	A-146	A-196	A-232
			1.24	I	40200	179000	5	6235DA	Y	A	841	AV	A-146	A-196	A-236
			1.69	III	46700	208000	5	6245DA	Y	C	841	AV	A-150	A-200	A-236
			2.13	III	57900	258000	5	6255DA	Y	C	841	-	A-150	A-200	A-236
1.74	141000	15900	-	-	32600	145000	5	6225DA	Y		1003	AV	A-146	A-196	A-232
	161000	18200	1.12	I	40200	179000	5	6235DA	Y	A	1003	AV	A-146	A-196	A-236
			1.42	II	46700	208000	5	6245DA	Y	B	1003	AV	A-150	A-200	A-236
			1.89	III	57900	258000	5	6255DA	Y	C	1003	-	A-150	A-200	A-236
1.40	181000	20500	-	-	40200	179000	5	6235DA	Y		1247	AV	A-146	A-196	A-236
	201000	22700	1.14	I	46700	208000	5	6245DA	Y	A	1247	AV	A-150	A-200	A-236
			1.52	II	57900	258000	5	6255DA	Y	B	1247	-	A-150	A-200	A-236
1.18	200000	22600	-	-	46700	208000	5	6245DA	Y		1479	AV	A-150	A-200	A-236
	238000	26900	1.15	I	57900	258000	5	6255DA	Y	A	1479	-	A-150	A-200	A-236
0.946	297000	33600	1.03	I	57900	258000	5	6255DA	Y	A	1849	AV	A-150	A-200	A-236
0.847	305000	34500	-	-	57900	258000	5	6255DA	Y		2065	-	A-150	A-200	A-236
0.690	305000	34500	-	-	57900	258000	5	6255DA	Y		2537	AV	A-150	A-200	A-236
0.575	274000	31000	-	-	57900	258000	5	6255DA	Y		3045	-	A-150	A-200	A-236
0.503	305000	34500	-	-	57900	258000	5	6255DA	Y		3481	AV	A-150	A-200	A-236
0.394	274000	31000	-	-	57900	258000	5	6255DA	Y		4437	AV	A-150	A-200	A-236
0.341	305000	34500	-	-	57900	258000	5	6255DA	Y		5133	AV	A-150	A-200	A-236
0.283	274000	31000	-	-	57900	258000	5	6255DA	Y		6177	AV	A-150	A-200	A-236
0.231	274000	31000	-	-	57900	258000	5	6255DA	Y		7569	AV	A-150	A-200	A-236

Notes: [1] Refer to Technical Information Section for R1 and R2 model Overhung Load information.
[2] CNHM, CHHM, CNFM, CHFM, CNVM, CVVM are type designations, see page A-3.
[3] For Inverter Duty, single reduction, see pages A-154~163; double reduction, see pages A-164~175. For Single Phase, see page A-244.
[4] For Single Phase, see page A-245.
[5] For type CVFM, single reduction, see page A-219; double reduction, see page A-240.

7.5 HP, 5.5 kW, 60 Hz, 1750 RPM

Output Speed	Output Torque		Service Factor		Overhung Load[1]		Selection					Option	Dimension Page[2]		
RPM	in•lb	N•m	SF	AGMA Class	lb	N	HP Symbol	Frame Size	Shaft Spec.	AGMA Class	Ratio	Inverter Duty	CNHM CHHM[3]	CNVM CVVM[4]	CNFM CHFM[5]
292	1510	171	1.06	I	1090	4850	8	6125	Y	A	6	-	A-126	A-176	A-204
			1.71	III	1280	5710	8	6130	Y	C	6	AV	A-128	A-180	A-208
			2.05	III	1280	5710	8	6135	Y	C	6	AV	A-128	A-180	A-208
219	2020	228	1.26	I	1210	5400	8	6125	Y	A	8	-	A-126	A-176	A-204
			1.71	III	1430	6360	8	6130	Y	C	8	AV	A-128	A-180	A-208
			2.05	III	1430	6360	8	6135	Y	C	8	AV	A-128	A-180	A-208
159	2780	314	1.08	I	1370	6100	8	6125	Y	A	11	-	A-126	A-176	A-204
			1.71	III	1630	7240	8	6130	Y	C	11	AV	A-128	A-180	A-208
			2.05	III	1630	7240	8	6135	Y	C	11	AV	A-128	A-180	A-208
135	3280	371	1.08	I	1410	6280	8	6125	Y	A	13	-	A-126	A-176	A-204
			1.71	III	1690	7530	8	6130	Y	C	13	AV	A-128	A-180	A-208
			2.05	III	1690	7530	8	6135	Y	C	13	AV	A-128	A-180	A-208
117	3790	428	1.08	I	1510	6730	8	6125	Y	A	15	-	A-126	A-176	A-204
			1.41	II	1720	7680	8	6130	Y	B	15	AV	A-128	A-180	A-208
			1.63	III	1720	7680	8	6135	Y	C	15	AV	A-128	A-180	A-208
			2.18	III	2650	11800	8	6140	Y	C	15	AV	A-128	A-180	A-208
103	4290	485	1.03	I	1520	6780	8	6125	Y	A	17	-	A-126	A-176	A-204
			1.51	II	1850	8230	8	6135	Y	B	17	AV	A-128	A-180	A-208
			1.84	III	2760	12300	8	6140	Y	C	17	AV	A-128	A-180	A-208
83.3	5300	599	0.89	-	1660	7390	8	6125	Y		21	-	A-126	A-176	A-204
			1.12	I	1970	8760	8	6130	Y	A	21	AV	A-128	A-180	A-208
			1.37	II	1970	8760	8	6135	Y	B	21	AV	A-128	A-180	A-208
			1.57	II	2940	13100	8	6140	Y	B	21	AV	A-128	A-180	A-208
			2.00	III	2940	13100	8	6145	Y	C	21	AV	A-128	A-180	A-208
			2.35	III	3460	15400	8	6160	Y	C	21	AV	A-128	A-180	A-208
70.0	6310	713	1.08	I	2040	9070	8	6135	Y	A	25	AV	A-128	A-180	A-208
			1.44	II	3100	13800	8	6145	Y	B	25	AV	A-128	A-180	A-208
			1.79	III	3610	16100	8	6160	Y	C	25	AV	A-128	A-180	A-208
60.3	7320	827	1.03	I	2130	9500	8	6135	Y	A	29	AV	A-128	A-180	A-208
			1.08	I	3170	14100	8	6140	Y	A	29	AV	A-128	A-180	A-208
			1.37	II	3170	14100	8	6145	Y	B	29	AV	A-128	A-180	A-208
			1.91	III	3770	16800	8	6160	Y	C	29	AV	A-128	A-180	A-208
			2.07	III	3770	16800	8	6165	Y	C	29	AV	A-128	A-180	A-208
50.0	8830	998	0.95	-	3370	15000	8	6140	Y		35	AV	A-128	A-180	A-208
			1.37	II	3370	15000	8	6145	Y	B	35	AV	A-128	A-180	A-208
			1.76	III	4000	17800	8	6160	Y	C	35	AV	A-128	A-180	A-208
			2.07	III	4000	17800	8	6165	Y	C	35	AV	A-128	A-180	A-208
			2.18	III	4540	20200	8	6170	Y	C	35	AV	A-132	A-180	A-210
40.7	10900	1230	0.98	-	3500	15600	8	6145	Y		43	AV	A-128	A-180	A-208
			1.35	II	4240	18900	8	6160	Y	B	43	AV	A-128	A-180	A-208
			1.44	II	4240	18900	8	6165	Y	B	43	AV	A-128	A-180	A-208
			1.77	III	4830	21500	8	6170	Y	C	43	AV	A-132	A-180	A-210
			2.05	III	4830	21500	8	6175	Y	C	43	AV	A-132	A-180	A-210
34.3	12800	1450	1.05	I	4400	19600	8	6160	Y	A	51	AV	A-128	A-180	A-208
			1.37	II	4400	19600	8	6165	Y	B	51	AV	A-128	A-180	A-208
			1.53	II	5030	22400	8	6170	Y	B	51	AV	A-132	A-180	A-210
			2.05	III	5030	22400	8	6175	Y	C	51	AV	A-132	A-180	A-210

Notes: [1] Refer to Technical Information Section for R1 and R2 model Overhung Load information.
[2] CNHM, CHHM, CNFM, CHFM, CNVM, CVVM are type designations, see page A-3.
[3] For Inverter Duty, single reduction, see pages A-154~163; double reduction, see pages A-164~175. For Single Phase, see page A-244.
[4] For Single Phase, see page A-245.
[5] For type CVFM, single reduction, see page A-219; double reduction, see page A-240.

SELECTION TABLES – 60 Hz

7.5 HP, 5.5 kW, 60 Hz, 1750 RPM

Output Speed	Output Torque		Service Factor		Overhung Load[1]		Selection					Option	Dimension Page[2]		
RPM	in•lb	N•m	SF	AGMA Class	lb	N	HP Symbol	Frame Size	Shaft Spec.	AGMA Class	Ratio	Inverter Duty	CNHM CHHM[3]	CNVM CVVM[4]	CNFM CHFM[5]
29.7	14900	1680	1.05	I	4870	21700	8	6165	Y	A	59	AV	A-128	A-180	A-208
			1.51	II	5250	23400	8	6175	Y	B	59	AV	A-132	A-180	A-210
			1.77	III	7050	31400	8	6180	Y	C	59	AV	A-132	A-180	A-210
24.6	17900	2020	1.03	I	4850	21600	8	6165	Y	A	71	AV	A-128	A-180	A-208
			1.30	II	5550	24700	8	6175	Y	B	71	AV	A-132	A-180	A-210
			1.60	III	7500	33400	8	6180	Y	C	71	AV	A-132	A-180	A-210
			1.78	III	7500	33400	8	6185	Y	C	71	AV	A-132	A-180	A-210
20.1	21900	2480	1.02	I	5930	26400	8	6175	Y	A	87	AV	A-132	A-180	A-210
			1.56	II	8060	35900	8	6185	Y	B	87	AV	A-132	A-180	A-210
			2.15	III	11300	50500	8	6190	Y	C	87	-	A-132	A-180	A-210
16.8	18600	2100	-	-	4960	22100	8	6165DC	Y		104	-	A-142	A-192	A-228
	22400	2530	-	-	6420	28600	8	6170DC	Y		104	-	A-142	A-192	A-228
	24900	2810	1.12	I	6400	28500	8	6175DC	Y	A	104	-	A-142	A-192	A-228
			1.45	II	8580	38200	8	6180DB	Y	B	104	AV	A-142	A-192	A-230
			1.74	III	8580	38200	8	6185DB	Y	C	104	AV	A-142	A-192	A-230
			2.17	III	12000	53500	8	6190DB	Y	C	104	AV	A-142	A-192	A-230
14.5	22400	2530	-	-	6620	29500	8	6170DC	Y		121	-	A-142	A-192	A-228
	28900	3270	0.96	-	6620	29500	8	6175DC	Y		121	-	A-142	A-192	A-228
			1.24	I	9120	40600	8	6180DB	Y	A	121	AV	A-142	A-192	A-230
			1.47	II	9120	40600	8	6185DB	Y	B	121	AV	A-142	A-192	A-230
			1.95	III	12800	57000	8	6190DB	Y	C	121	AV	A-142	A-192	A-230
			2.17	III	12800	57000	8	6195DB	Y	C	121	AV	A-142	A-192	A-230
12.2	27900	3150	-	-	6620	29500	8	6175DC	Y		143	-	A-142	A-192	A-228
	34200	3860	1.27	I	9360	41700	8	6185DB	Y	A	143	AV	A-142	A-192	A-230
			1.65	III	13200	59000	8	6190DB	Y	C	143	AV	A-142	A-192	A-230
			1.97	III	13200	59000	8	6195DB	Y	C	143	AV	A-142	A-192	A-230
10.6	27900	3150	-	-	6620	29500	8	6175DC	Y		165	-	A-142	A-192	A-228
	35900	4060	-	-	9360	41700	8	6180DB	Y		165	AV	A-142	A-192	A-230
	39500	4460	1.10	I	9360	41700	8	6185DB	Y	A	165	AV	A-142	A-192	A-230
			1.14	I	13200	59000	8	6190DA	Y	A	165	-	A-142	A-192	A-230
			1.43	II	13200	59000	8	6190DB	Y	B	165	AV	A-142	A-192	A-230
			1.77	III	13200	59000	8	6195DB	Y	C	165	AV	A-142	A-192	A-230
			2.08	III	18900	84100	8	6205DB	Y	C	165	AV	A-146	A-196	A-232
			2.74	III	23400	104000	8	6215DA	Y	C	165	AV	A-146	A-196	A-232
8.97	35900	4060	-	-	9360	41700	8	6180DB	Y		195	AV	A-142	A-192	A-230
	43500	4920	-	-	9360	41700	8	6185DB	Y		195	AV	A-142	A-192	A-230
	46600	5270	1.14	I	13200	59000	8	6190DA	Y	A	195	-	A-142	A-192	A-230
			1.50	II	13200	59000	8	6195DB	Y	B	195	AV	A-142	A-192	A-230
			1.76	III	18900	84100	8	6205DB	Y	C	195	AV	A-146	A-196	A-232
			2.17	III	23400	104000	8	6215DA	Y	C	195	AV	A-146	A-196	A-232
7.58	44200	5000	-	-	9360	41700	8	6185DB	Y		231	AV	A-142	A-192	A-230
	55200	6240	1.14	I	13200	59000	8	6195DA	Y	A	231	-	A-142	A-192	A-230
			1.28	I	13200	59000	8	6195DB	Y	A	231	AV	A-142	A-192	A-230
			1.49	II	18900	84100	8	6205DB	Y	B	231	AV	A-146	A-196	A-232
			2.00	III	23400	104000	8	6215DA	Y	C	231	AV	A-146	A-196	A-232
			2.17	III	29600	132000	8	6225DA	Y	C	231	AV	A-146	A-196	A-232

Notes: [1] Refer to Technical Information Section for R1 and R2 model Overhung Load information.
[2] CNHM, CHHM, CNFM, CHFM, CNVM, CVVM are type designations, see page A-3.
[3] For Inverter Duty, single reduction, see pages A-154~163; double reduction, see pages A-164~175. For Single Phase, see page A-244.
[4] For Single Phase, see page A-245.
[5] For type CVFM, single reduction, see page A-219; double reduction, see page A-240.

7.5 HP, 5.5 kW, 60 Hz, 1750 RPM

Output Speed	Output Torque		Service Factor		Overhung Load[1]		Selection					Option	Dimension Page[2]		
RPM	in•lb	N•m	SF	AGMA Class	lb	N	HP Symbol	Frame Size	Shaft Spec.	AGMA Class	Ratio	Inverter Duty	CNHM CHHM[3]	CNVM CVVM[4]	CNFM CHFM[5]
6.41	44200	5000	-	-	9360	41700	8	6185DB	Y		273	AV	A-142	A-192	A-230
	56500	6380	-	-	13200	59000	8	6190DA	Y		273	-	A-142	A-192	A-230
	65200	7370	1.08	I	13200	59000	8	6195DA	Y	A	273	-	A-142	A-192	A-230
			1.26	I	18900	84100	8	6205DB	Y	A	273	AV	A-146	A-196	A-232
			1.70	III	23400	104000	8	6215DA	Y	C	273	AV	A-146	A-196	A-232
			2.01	III	31000	138000	8	6225DA	Y	C	273	AV	A-146	A-196	A-232
			2.56	III	38600	172000	8	6235DA	Y	C	273	AV	A-146	A-196	A-236
5.49	56500	6380	-	-	13200	59000	8	6190DA	Y		319	-	A-142	A-192	A-230
	70400	7960	-	-	13200	59000	8	6195DA	Y		319	-	A-142	A-192	A-230
	76300	8620	1.07	I	18900	84100	8	6205DB	Y	A	319	AV	A-146	A-196	A-232
			1.47	II	23400	104000	8	6215DA	Y	B	319	AV	A-146	A-196	A-232
			1.75	III	32100	143000	8	6225DA	Y	C	319	AV	A-146	A-196	A-232
			2.19	III	40200	179000	8	6235DA	Y	C	319	AV	A-146	A-196	A-236
4.64	70400	7960	-	-	13200	59000	8	6195DA	Y		377	-	A-142	A-192	A-230
	71000	8030	-	-	18900	84100	8	6205DA	Y		377	-	A-146	A-196	A-232
	90200	10200	1.24	I	23400	104000	8	6215DA	Y	A	377	AV	A-146	A-196	A-232
			1.47	II	32600	145000	8	6225DA	Y	B	377	AV	A-146	A-196	A-232
			1.86	III	40200	179000	8	6235DA	Y	C	377	AV	A-146	A-196	A-236
			2.53	III	46700	208000	8	6245DA	Y	C	377	AV	A-150	A-200	A-236
3.70	113000	12800	0.98	-	23400	104000	8	6215DA	Y		473	AV	A-146	A-196	A-232
			1.25	I	32600	145000	8	6225DA	Y	A	473	AV	A-146	A-196	A-232
			1.60	III	40200	179000	8	6235DA	Y	C	473	AV	A-146	A-196	A-236
			2.02	III	46700	208000	8	6245DA	Y	C	473	AV	A-150	A-200	A-236
			2.70	III	57900	258000	8	6255DA	Y	C	473	-	A-150	A-200	A-236
3.13	112000	12700	-	-	23400	104000	8	6215DA	Y		559	AV	A-146	A-196	A-232
	134000	15100	1.06	I	32600	145000	8	6225DA	Y	A	559	AV	A-146	A-196	A-232
			1.36	II	40200	179000	8	6235DA	Y	B	559	AV	A-146	A-196	A-236
			1.71	III	46700	208000	8	6245DA	Y	C	559	AV	A-150	A-200	A-236
			2.28	III	57900	258000	8	6255DA	Y	C	559	-	A-150	A-200	A-236
2.70	112000	12700	-	-	23400	104000	8	6215DA	Y		649	AV	A-146	A-196	A-232
	141000	15900	-	-	32600	145000	8	6225DA	Y		649	AV	A-146	A-196	A-232
	155000	17500	1.17	I	40200	179000	8	6235DA	Y	A	649	AV	A-146	A-196	A-236
			1.47	II	46700	208000	8	6245DA	Y	B	649	AV	A-150	A-200	A-236
			1.97	III	57900	258000	8	6255DA	Y	C	649	-	A-150	A-200	A-236
			2.62	III	62000	276000	8	6265DA	Y	C	649	-	A-150	A-200	A-236
2.39	142000	16000	-	-	32600	145000	8	6225DA	Y		731	AV	A-146	A-196	A-232
	174000	19700	1.04	I	40200	179000	8	6235DA	Y	A	731	AV	A-146	A-196	A-236
			1.31	II	46700	208000	8	6245DA	Y	B	731	AV	A-150	A-200	A-236
			1.75	III	57900	258000	8	6255DA	Y	C	731	-	A-150	A-200	A-236
			2.33	III	62000	276000	8	6265DA	Y	C	731	-	A-150	A-200	A-236
2.08	167000	18900	-	-	40200	179000	8	6235DA	Y		841	AV	A-146	A-196	A-236
	201000	22700	1.14	I	46700	208000	8	6245DA	Y	A	841	AV	A-150	A-200	A-236
			1.43	II	57900	258000	8	6255DA	Y	B	841	AV	A-150	A-200	A-236
			2.02	III	62000	276000	8	6265DA	Y	C	841	-	A-150	A-200	A-236

Notes: [1] Refer to Technical Information Section for R1 and R2 model Overhung Load information.
[2] CNHM, CHHM, CNFM, CHFM, CNVM, CVVM are type designations, see page A-3.
[3] For Inverter Duty, single reduction, see pages A-154~163; double reduction, see pages A-164~175. For Single Phase, see page A-244.
[4] For Single Phase, see page A-245.
[5] For type CVFM, single reduction, see page A-219; double reduction, see page A-240.

SELECTION TABLES – 60 Hz

7.5 HP, 5.5 kW, 60 Hz, 1750 RPM

Output Speed	Output Torque		Service Factor		Overhung Load[1]		Selection					Option	Dimension Page[2]		
RPM	in•lb	N•m	SF	AGMA Class	lb	N	HP Symbol	Frame Size	Shaft Spec.	AGMA Class	Ratio	Inverter Duty	CNHM CHHM[3]	CNVM CVVM[4]	CNFM CHFM[5]
1.74	181000	20500	-	-	40200	179000	8	6235DA	Y		1003	AV	A-146	A-196	A-236
	240000	27100	0.95	-	46700	208000	8	6245DA	Y		1003	AV	A-150	A-200	A-236
			1.27	I	57900	258000	8	6255DA	Y	A	1003	-	A-150	A-200	A-236
			1.70	III	62000	276000	8	6265DA	Y	C	1003	-	A-150	A-200	A-236
1.40	228000	25800	-	-	46700	208000	8	6245DA	Y		1247	AV	A-150	A-200	A-236
	298000	33700	1.02	I	57900	258000	8	6255DA	Y	A	1247	AV	A-150	A-200	A-236
			1.37	II	62000	276000	8	6265DA	Y	B	1247	-	A-150	A-200	A-236
1.18	274000	31000	-	-	57900	258000	8	6255DA	Y		1479	-	A-150	A-200	A-236
	354000	40000	1.10	I	62000	276000	8	6265DA	Y	A	1479	-	A-150	A-200	A-236
0.946	305000	34500	-	-	57900	258000	8	6255DA	Y		1849	AV	A-150	A-200	A-236
	407000	46000	-	-	62000	276000	8	6265DA	Y		1849	-	A-150	A-200	A-236
0.847	407000	46000	-	-	62000	276000	8	6265DA	Y		2065	-	A-150	A-200	A-236
0.690	407000	46000	-	-	62000	276000	8	6265DA	Y		2537	-	A-150	A-200	A-236
0.575	389000	44000	-	-	62000	276000	8	6265DA	Y		3045	-	A-150	A-200	A-236
0.503	407000	46000	-	-	62000	276000	8	6265DA	Y		3481	-	A-150	A-200	A-236
0.394	389000	44000	-	-	62000	276000	8	6265DA	Y		4437	-	A-150	A-200	A-236
0.341	407000	46000	-	-	62000	276000	8	6265DA	Y		5133	-	A-150	A-200	A-236
0.283	389000	44000	-	-	62000	276000	8	6265DA	Y		6177	-	A-150	A-200	A-236
0.231	389000	44000	-	-	62000	276000	8	6265DA	Y		7569	-	A-150	A-200	A-236

10 HP, 7.5 kW, 60 Hz, 1750 RPM

Output Speed	Output Torque		Service Factor		Overhung Load[1]		Selection					Option	Dimension Page[2]		
RPM	in•lb	N•m	SF	AGMA Class	lb	N	HP Symbol	Frame Size	Shaft Spec.	AGMA Class	Ratio	Inverter Duty	CNHM CHHM[3]	CNVM CVVM[4]	CNFM CHFM[5]
292	2060	233	1.25	I	1270	5650	10	6130	Y	A	6	AV	A-128	A-180	A-208
			1.51	II	1270	5650	10	6135	Y	B	6	AV	A-128	A-180	A-208
			1.73	III	1980	8830	10	6140	Y	C	6	AV	A-128	A-180	A-208
			2.01	III	1980	8830	10	6145	Y	C	6	AV	A-128	A-180	A-208
219	2750	311	1.25	I	1410	6290	10	6130	Y	A	8	AV	A-128	A-180	A-208
			1.51	II	1410	6290	10	6135	Y	B	8	AV	A-128	A-180	A-208
			1.73	III	2200	9790	10	6140	Y	C	8	AV	A-128	A-180	A-208
			2.01	III	2200	9790	10	6145	Y	C	8	AV	A-128	A-180	A-208
159	3790	428	1.25	I	1610	7150	10	6130	Y	A	11	AV	A-128	A-180	A-208
			1.51	II	1610	7150	10	6135	Y	B	11	AV	A-128	A-180	A-208
			1.73	III	2470	11000	10	6140	Y	C	11	AV	A-128	A-180	A-208
			2.01	III	2470	11000	10	6145	Y	C	11	AV	A-128	A-180	A-208
135	4470	505	1.25	I	1670	7430	10	6130	Y	A	13	AV	A-128	A-180	A-208
			1.51	II	1670	7430	10	6135	Y	B	13	AV	A-128	A-180	A-208
			1.73	III	2510	11200	10	6140	Y	C	13	AV	A-128	A-180	A-208
			2.01	III	2510	11200	10	6145	Y	C	13	AV	A-128	A-180	A-208
117	5160	583	1.20	I	1700	7570	10	6135	Y	A	15	AV	A-128	A-180	A-208
			1.60	III	2630	11700	10	6140	Y	C	15	AV	A-128	A-180	A-208
			2.01	III	2630	11700	10	6145	Y	C	15	AV	A-128	A-180	A-208
103	5850	661	1.11	I	1820	8100	10	6135	Y	A	17	AV	A-128	A-180	A-208
			1.35	II	2740	12200	10	6140	Y	B	17	AV	A-128	A-180	A-208
			1.60	III	2740	12200	10	6145	Y	C	17	AV	A-128	A-180	A-208
			1.75	III	3210	14300	10	6160	Y	C	17	AV	A-128	A-180	A-208

Notes: [1] Refer to Technical Information Section for R1 and R2 model Overhung Load information.
[2] CNHM, CHHM, CNFM, CHFM, CNVM, CVVM are type designations, see page A-3.
[3] For Inverter Duty, single reduction, see pages A-154~163; double reduction, see pages A-164~175. For Single Phase, see page A-244.
[4] For Single Phase, see page A-245.
[5] For type CVFM, single reduction, see page A-219; double reduction, see page A-240.

10 HP, 7.5 kW, 60 Hz, 1750 RPM

Output Speed	Output Torque		Service Factor		Overhung Load[1]		Selection					Option	Dimension Page[2]		
RPM	in•lb	N•m	SF	AGMA Class	lb	N	HP Symbol	Frame Size	Shaft Spec.	AGMA Class	Ratio	Inverter Duty	CNHM CHHM[3]	CNVM CVVM[4]	CNFM CHFM[5]
83.3	7230	817	1.00	I	1930	8590	10	6135	Y	A	21	AV	A-128	A-180	A-208
			1.47	II	2940	13100	10	6145	Y	B	21	AV	A-128	A-180	A-208
			1.72	III	3440	15300	10	6160	Y	C	21	AV	A-128	A-180	A-208
			2.15	III	3440	15300	10	6165	Y	C	21	AV	A-128	A-180	A-208
70.0	8600	972	1.05	I	3080	13700	10	6145	Y	A	25	AV	A-128	A-180	A-208
			1.31	II	3570	15900	10	6160	Y	B	25	AV	A-128	A-180	A-208
			2.01	III	3570	15900	10	6165	Y	C	25	AV	A-128	A-180	A-208
60.3	10000	1130	1.00	I	3140	14000	10	6145	Y	A	29	AV	A-128	A-180	A-208
			1.52	II	3730	16600	10	6165	Y	B	29	AV	A-128	A-180	A-208
			1.91	III	4240	18900	10	6170	Y	C	29	AV	A-132	A-180	A-208
50.0	12000	1360	1.00	I	3350	14900	10	6145	Y	A	35	AV	A-128	A-180	A-208
			1.52	II	3930	17500	10	6165	Y	B	35	AV	A-128	A-180	A-208
			1.60	III	4490	20000	10	6170	Y	C	35	AV	A-132	A-180	A-210
			2.01	III	4490	20000	10	6175	Y	C	35	AV	A-132	A-180	A-210
40.7	14800	1670	1.05	I	4180	18600	10	6165	Y	A	43	AV	A-128	A-180	A-208
			1.51	II	4780	21300	10	6175	Y	B	43	AV	A-132	A-180	A-210
			2.01	III	6490	28900	10	6180	Y	C	43	AV	A-132	A-180	A-210
34.3	17500	1980	1.00	I	4330	19300	10	6165	Y	A	51	AV	A-128	A-180	A-208
			1.12	I	4960	22100	10	6170	Y	A	51	AV	A-132	A-180	A-210
			1.51	II	4960	22100	10	6175	Y	B	51	AV	A-132	A-180	A-210
			1.60	III	6710	29900	10	6180	Y	C	51	AV	A-132	A-180	A-210
			2.01	III	6710	29900	10	6185	Y	C	51	AV	A-132	A-180	A-210
29.7	20300	2290	1.11	I	5190	23100	10	6175	Y	A	59	AV	A-132	A-180	A-210
			1.30	II	7010	31200	10	6180	Y	B	59	AV	A-132	A-180	A-210
			1.60	III	7010	31200	10	6185	Y	C	59	AV	A-132	A-180	A-210
			2.04	III	9880	44000	10	6190	Y	C	59	-	A-132	A-180	A-210
24.6	24400	2760	0.95	-	5460	24300	10	6175	Y		71	AV	A-132	A-180	A-210
			1.17	I	7430	33100	10	6180	Y	A	71	AV	A-132	A-180	A-210
			1.31	II	7430	33100	10	6185	Y	B	71	AV	A-132	A-180	A-210
			1.80	III	10500	46700	10	6190	Y	C	71	-	A-132	A-180	A-210
20.1	29900	3380	1.15	I	7990	35600	10	6185	Y	A	87	AV	A-132	A-180	A-210
			1.57	II	11300	50200	10	6190	Y	B	87	-	A-132	A-180	A-210
			1.81	III	11300	50200	10	6195	Y	C	87	-	A-132	A-180	A-210
16.8	33900	3830	1.28	I	8490	37800	10	6185DB	Y	A	104	AV	A-142	A-192	A-230
			1.59	II	11900	53200	10	6195DB	Y	B	104	AV	A-142	A-192	A-230
14.5	35900	4060	-	-	9050	40300	10	6180DB	Y		121	AV	A-142	A-192	A-230
	39500	4460	1.08	I	9000	40100	10	6185DB	Y	A	121	AV	A-142	A-192	A-230
			1.43	II	12700	56600	10	6190DB	Y	B	121	AV	A-142	A-192	A-230
			1.59	II	12700	56600	10	6195DB	Y	B	121	AV	A-142	A-192	A-230
			2.55	III	22900	102000	10	6215DB	Y	C	121	AV	A-146	A-196	A-232
12.2	35900	4060	-	-	9360	41700	10	6180DB	Y		143	AV	A-142	A-192	A-230
	43400	4900	-	-	9360	41700	10	6185DB	Y		143	AV	A-142	A-192	A-230
	46600	5270	1.21	I	13200	58800	10	6190DB	Y	A	143	AV	A-142	A-192	A-230
			1.45	II	13200	58800	10	6195DB	Y	B	143	AV	A-142	A-192	A-230

Notes: [1] Refer to Technical Information Section for R1 and R2 model Overhung Load information.
[2] CNHM, CHHM, CNFM, CHFM, CNVM, CVVM are type designations, see page A-3.
[3] For Inverter Duty, single reduction, see pages A-154~163; double reduction, see pages A-164~175. For Single Phase, see page A-244.
[4] For Single Phase, see page A-245.
[5] For type CVFM, single reduction, see page A-219; double reduction, see page A-240.

SELECTION TABLES – 60 Hz

10 HP, 7.5 kW, 60 Hz, 1750 RPM

Output Speed	Output Torque		Service Factor		Overhung Load[1]		Selection					Option	Dimension Page[2]		
RPM	in•lb	N•m	SF	AGMA Class	lb	N	HP Symbol	Frame Size	Shaft Spec.	AGMA Class	Ratio	Inverter Duty	CNHM CHHM[3]	CNVM CVVM[4]	CNFM CHFM[5]
10.6	43500	4920	-	-	9360	41700	10	6185DB	Y		165	AV	A-142	A-192	A-230
	53800	6080	1.05	I	13200	59000	10	6190DB	Y	A	165	AV	A-142	A-192	A-230
			1.30	II	13200	59000	10	6195DB	Y	B	165	AV	A-142	A-192	A-230
			1.59	II	23400	104000	10	6215DA	Y	B	165	AV	A-146	A-196	A-232
			2.00	III	23400	104000	10	6215DB	Y	C	165	AV	A-146	A-196	A-232
			2.38	III	26300	117000	10	6225DB	Y	C	165	-	A-146	A-196	A-232
8.97	56500	6380	-	-	13200	58900	10	6190DB	Y		195	AV	A-142	A-192	A-230
	63500	7180	1.10	I	13200	58600	10	6195DB	Y	A	195	AV	A-142	A-192	A-230
			1.29	I	18900	84100	10	6205DB	Y	A	195	AV	A-146	A-196	A-232
			1.59	II	23400	104000	10	6215DA	Y	B	195	AV	A-146	A-196	A-232
			2.02	III	27600	123000	10	6225DB	Y	C	195	-	A-146	A-196	A-232
			2.73	III	34400	153000	10	6235DA	Y	C	195	AV	A-146	A-196	A-236
7.58	56500	6380	-	-	13200	59000	10	6190DB	Y		231	AV	A-142	A-192	A-230
	70400	7960	-	-	13200	59000	10	6195DB	Y		231	AV	A-142	A-192	A-230
	75300	8510	1.09	I	18900	84100	10	6205DB	Y	A	231	AV	A-146	A-196	A-232
			1.47	II	23400	104000	10	6215DA	Y	B	231	AV	A-146	A-196	A-232
			1.59	II	29400	131000	10	6225DA	Y	B	231	AV	A-146	A-196	A-232
			2.22	III	36800	164000	10	6235DA	Y	C	231	AV	A-146	A-196	A-236
6.41	70400	7960	-	-	13200	59000	10	6195DB	Y		273	AV	A-142	A-192	A-230
	82000	9270	-	-	18900	84100	10	6205DB	Y		273	AV	A-146	A-196	A-232
	89400	10100	1.24	I	23400	104000	10	6215DA	Y	A	273	AV	A-146	A-196	A-232
			1.47	II	30800	137000	10	6225DA	Y	B	273	AV	A-146	A-196	A-232
			1.88	III	38600	172000	10	6235DA	Y	C	273	AV	A-146	A-196	A-236
			2.57	III	42900	191000	10	6245DA	Y	C	273	AV	A-150	A-200	A-236
5.49	104000	11800	1.08	I	23400	104000	10	6215DA	Y	A	319	AV	A-146	A-196	A-232
			1.28	I	32100	143000	10	6225DA	Y	A	319	AV	A-146	A-196	A-232
			1.61	III	40200	179000	10	6235DA	Y	C	319	AV	A-146	A-196	A-236
			2.20	III	44700	199000	10	6245DA	Y	C	319	AV	A-150	A-200	A-236
4.64	112000	12700	-	-	23400	104000	10	6215DA	Y		377	AV	A-146	A-196	A-232
	123000	13900	1.08	I	32600	145000	10	6225DA	Y	A	377	AV	A-146	A-196	A-232
			1.36	II	40200	179000	10	6235DA	Y	B	377	AV	A-146	A-196	A-236
			1.86	III	46700	208000	10	6245DA	Y	C	377	AV	A-150	A-200	A-236
			2.34	III	57700	257000	10	6255DA	Y	C	377	-	A-150	A-200	A-236
3.70	142000	16000	-	-	32600	145000	10	6225DA	Y		473	AV	A-146	A-196	A-232
	154000	17400	1.18	I	40200	179000	10	6235DA	Y	A	473	AV	A-146	A-196	A-236
			1.48	II	46700	208000	10	6245DA	Y	B	473	AV	A-150	A-200	A-236
			1.98	III	57900	258000	10	6255DA	Y	C	473	-	A-150	A-200	A-236
			2.64	III	62000	276000	10	6265DA	Y	C	473	-	A-150	A-200	A-236
3.13	142000	16000	-	-	32600	145000	10	6225DA	Y		559	AV	A-146	A-196	A-232
	182000	20600	1.00	I	40200	179000	10	6235DA	Y	A	559	AV	A-146	A-196	A-236
			1.25	I	46700	208000	10	6245DA	Y	A	559	AV	A-150	A-200	A-236
			1.68	III	57900	258000	10	6255DA	Y	C	559	-	A-150	A-200	A-236
			2.23	III	62000	276000	10	6265DA	Y	C	559	-	A-150	A-200	A-236
2.70	181000	20500	-	-	40200	179000	10	6235DA	Y		649	AV	A-146	A-196	A-236
	211000	23900	1.08	I	46700	208000	10	6245DA	Y	A	649	AV	A-150	A-200	A-236
			1.44	II	57900	258000	10	6255DA	Y	B	649	-	A-150	A-200	A-236
			1.92	III	62000	276000	10	6265DA	Y	C	649	-	A-150	A-200	A-236
			2.85	III	55700	248000	10	6275DA	Y	C	649	-	A-150	A-200	[6]

Notes: [1] Refer to Technical Information Section for R1 and R2 model Overhung Load information.
[2] CNHM, CHHM, CNFM, CHFM, CNVM, CVVM are type designations, see page A-3.
[3] For Inverter Duty, single reduction, see pages A-154~163; double reduction, see pages A-164~175. For Single Phase, see page A-244.
[4] For Single Phase, see page A-245.
[5] For type CVFM, single reduction, see page A-219; double reduction, see page A-240.
[6] Consult factory for frame size 6275DA.

10 HP, 7.5 kW, 60 Hz, 1750 RPM

Output Speed	Output Torque		Service Factor		Overhung Load[1]		Selection					Option	Dimension Page[2]		
RPM	in•lb	N•m	SF	AGMA Class	lb	N	HP Symbol	Frame Size	Shaft Spec.	AGMA Class	Ratio	Inverter Duty	CNHM CHHM[3]	CNVM CVVM[4]	CNFM CHFM[5]
2.39	181000	20500	-	-	40200	179000	10	6235DA	Y		731	AV	A-146	A-196	A-236
	228000	25800	-	-	46700	208000	10	6245DA	Y		731	AV	A-150	A-200	A-236
	238000	26900	1.28	I	57900	258000	10	6255DA	Y	A	731	AV	A-150	A-200	A-236
			1.71	III	62000	276000	10	6265DA	Y	C	731	-	A-150	A-200	A-236
			2.53	III	55700	248000	10	6275DA	Y	C	731	-	A-150	A-200	[6]
2.08	228000	25800	-	-	46700	208000	10	6245DA	Y		841	AV	A-150	A-200	A-236
	274000	31000	1.05	I	57900	258000	10	6255DA	Y	A	841	AV	A-150	A-200	A-236
			1.48	II	62000	276000	10	6265DA	Y	B	841	-	A-150	A-200	A-236
			2.20	III	55700	248000	10	6275DA	Y	C	841	-	A-150	A-200	[6]
1.74	305000	34500	-	-	57900	258000	10	6255DA	Y		1003	AV	A-150	A-200	A-236
	326000	36900	1.25	I	62000	276000	10	6265DA	Y	A	1003	-	A-150	A-200	A-236
			1.85	III	55700	248000	10	6275DA	Y	C	1003	-	A-150	A-200	[6]
1.40	305000	34500	-	-	57900	258000	10	6255DA	Y		1247	AV	A-150	A-200	A-236
	406000	45900	1.00	I	62000	276000	10	6265DA	Y	A	1247	-	A-150	A-200	A-236
			1.48	II	55700	248000	10	6275DA	Y	B	1247	-	A-150	A-200	[6]
1.18	389000	44000	-	-	62000	276000	10	6265DA	Y		1479	-	A-150	A-200	A-236
	482000	54500	1.25	I	55700	248000	10	6275DA	Y	A	1479	-	A-150	A-200	[6]
0.946	603000	68100	1.00	I	55700	248000	10	6275DA	Y	A	1849	-	A-150	A-200	[6]
0.847	603000	68200	-	-	55700	248000	10	6275DA	Y		2065	-	A-150	A-200	[6]
0.690	603000	68200	-	-	55700	248000	10	6275DA	Y		2537	-	A-150	A-200	[6]
0.575	603000	68200	-	-	55000	245000	10	6275DA	Y		3045	-	A-150	A-200	[6]
0.503	603000	68200	-	-	55700	248000	10	6275DA	Y		3481	-	A-150	A-200	[6]
0.394	603000	68200	-	-	55000	245000	10	6275DA	Y		4437	-	A-150	A-200	[6]
0.341	603000	68200	-	-	55000	245000	10	6275DA	Y		5133	-	A-150	A-200	[6]
0.283	603000	68200	-	-	55000	245000	10	6275DA	Y		6177	-	A-150	A-200	[6]
0.231	603000	68200	-	-	55000	245000	10	6275DA	Y		7569	-	A-150	A-200	[6]

15 HP, 11 kW, 60 Hz, 1750 RPM

Output Speed	Output Torque		Service Factor		Overhung Load[1]		Selection					Option[7]	Dimension Page[2]		
RPM	in•lb	N•m	SF	AGMA Class	lb	N	HP Symbol	Frame Size	Shaft Spec.	AGMA Class	Ratio	Inverter Duty	CNHM CHHM[3]	CNVM CVVM[4]	CNFM CHFM[5]
292	3030	342	1.03	I	1240	5540	15	6135	Y	A	6	AV	A-128	A-180	A-208
			1.37	II	1970	8780	15	6145	Y	B	6	AV[H]	A-128	A-180	A-208
			1.85	III	2190	9760	15	6160	Y	C	6	AV[H]	A-128	A-180	A-208
219	4030	456	1.03	I	1380	6150	15	6135	Y	A	8	AV	A-128	A-180	A-208
			1.37	II	2180	9730	15	6145	Y	B	8	AV[H]	A-128	A-180	A-208
			1.79	III	2450	10900	15	6160	Y	C	8	AV[H]	A-128	A-180	A-208
159	5550	627	1.03	I	1570	6980	15	6135	Y	A	11	AV	A-128	A-180	A-208
			1.37	II	2450	10900	15	6145	Y	B	11	AV[H]	A-128	A-180	A-208
			1.79	III	2760	12300	15	6160	Y	C	11	AV[H]	A-128	A-180	A-208
135	6560	741	1.03	I	1630	7250	15	6135	Y	A	13	AV	A-128	A-180	A-208
			1.18	I	2490	11100	15	6140	Y	A	13	AV[H]	A-128	A-180	A-208
			1.37	II	2490	11100	15	6145	Y	B	13	AV[H]	A-128	A-180	A-208
			1.79	III	2900	12900	15	6160	Y	C	13	AV[H]	A-128	A-180	A-208

Notes: [1] Refer to Technical Information Section for R1 and R2 model Overhung Load information.
[2] CNHM, CHHM, CNFM, CHFM, CNVM, CVVM are type designations, see page A-3.
[3] For Inverter Duty, single reduction, see pages A-154~163; double reduction, see pages A-164~175. For Single Phase, see page A-244.
[4] For Single Phase, see page A-245.
[5] For type CVFM, single reduction, see page A-219; double reduction, see page A-240.
[6] Consult factory for frame size 6275DA.
[7] [H] indicates a high center height unit.

SELECTION TABLES – 60 Hz

15 HP, 11 kW, 60 Hz, 1750 RPM

Output Speed	Output Torque		Service Factor		Overhung Load[1]		Selection					Option[6]	Dimension Page[2]		
RPM	in•lb	N•m	SF	AGMA Class	lb	N	HP Symbol	Frame Size	Shaft Spec.	AGMA Class	Ratio	Inverter Duty	CNHM CHHM[3]	CNVM CVVM[4]	CNFM CHFM[5]
117	7570	855	0.82	-	1650	7360	15	6135	Y		15	AV	A-128	A-180	A-208
			1.09	I	2600	11600	15	6140	Y	A	15	AV[H]	A-128	A-180	A-208
			1.37	II	2600	11600	15	6145	Y	B	15	AV[H]	A-128	A-180	A-208
			1.70	III	3050	13600	15	6160	Y	C	15	AV[H]	A-128	A-180	A-208
			2.05	III	3050	13600	15	6165	Y	C	15	AV[H]	A-128	A-180	A-208
103	8570	969	1.09	I	2720	12100	15	6145	Y	A	17	AV[H]	A-128	A-180	A-208
			1.19	I	3170	14100	15	6160	Y	A	17	AV[H]	A-128	A-180	A-208
			1.71	III	3170	14100	15	6165	Y	C	17	AV[H]	A-128	A-180	A-208
			1.79	III	3590	16000	15	6170	Y	C	17	AV	A-132	A-180	A-210
83.3	10600	1200	1.00	I	2900	12900	15	6145	Y	A	21	AV[H]	A-128	A-180	A-208
			1.17	I	3370	15000	15	6160	Y	A	21	AV[H]	A-128	A-180	A-208
			1.46	II	3370	15000	15	6165	Y	B	21	AV[H]	A-128	A-180	A-208
			1.77	III	3860	17200	15	6170	Y	C	21	AV	A-132	A-180	A-210
			2.19	III	3860	17200	15	6175	Y	C	21	AV	A-132	A-180	A-210
70.0	12700	1430	0.90	-	3530	15700	15	6160	Y		25	AV[H]	A-128	A-180	A-208
			1.37	II	3530	15700	15	6165	Y	B	25	AV[H]	A-128	A-180	A-208
			1.44	II	4000	17800	15	6170	Y	B	25	AV	A-132	A-180	A-210
			1.77	III	4000	17800	15	6175	Y	C	25	AV	A-132	A-180	A-210
60.3	14600	1650	1.04	I	3660	16300	15	6165	Y	A	29	AV[H]	A-128	A-180	A-208
			1.30	II	4200	18700	15	6170	Y	B	29	AV	A-132	A-180	A-210
			1.71	III	4200	18700	15	6175	Y	C	29	AV	A-132	A-180	A-210
			1.77	III	5640	25100	15	6180	Y	C	29	AV	A-132	A-180	A-210
50.0	17700	2000	1.04	I	3840	17100	15	6165	Y	A	35	AV[H]	A-128	A-180	A-208
			1.09	I	4420	19700	15	6170	Y	A	35	AV	A-132	A-180	A-210
			1.37	II	4420	19700	15	6175	Y	B	35	AV	A-132	A-180	A-210
			1.71	III	5990	26700	15	6180	Y	C	35	AV	A-132	A-180	A-210
			2.05	III	5990	26700	15	6185	Y	C	35	AV	A-132	A-180	A-210
40.7	21700	2450	1.03	I	4690	20900	15	6175	Y	A	43	AV	A-132	A-180	A-210
			1.37	II	6420	28600	15	6180	Y	B	43	AV	A-132	A-180	A-210
			1.71	III	6420	28600	15	6185	Y	C	43	AV	A-132	A-180	A-210
			1.90	III	9000	40100	15	6190	Y	C	43	AV	A-132	A-180	A-210
34.3	25700	2910	1.03	I	4870	21700	15	6175	Y	A	51	AV	A-132	A-180	A-210
			1.09	I	6650	29600	15	6180	Y	A	51	AV	A-132	A-180	A-210
			1.37	II	6650	29600	15	6185	Y	B	51	AV	A-132	A-180	A-210
			1.65	III	9410	41900	15	6190	Y	C	51	AV	A-132	A-180	A-210
			1.90	III	9410	41900	15	6195	Y	C	51	AV	A-132	A-180	A-210
29.7	29700	3360	1.09	I	6940	30900	15	6185	Y	A	59	AV	A-132	A-180	A-210
			1.39	II	9810	43700	15	6190	Y	B	59	AV	A-132	A-180	A-210
			1.71	III	9810	43700	15	6195	Y	C	59	AV	A-132	A-180	A-210
			2.05	III	17900	79900	15	6205	Y	C	59	-	A-132	A-184	A-214
24.6	35800	4050	0.89	-	7340	32700	15	6185	Y		71	AV	A-132	A-180	A-210
			1.23	I	10400	46300	15	6190	Y	A	71	AV	A-132	A-180	A-210
			1.42	II	10400	46300	15	6195	Y	B	71	AV	A-132	A-180	A-210
20.1	43900	4960	1.24	I	11200	49700	15	6195	Y	A	87	AV	A-132	A-180	A-210
			1.45	II	18900	84100	15	6205	Y	B	87	-	A-132	A-184	A-214
			1.95	III	20500	91500	15	6215	Y	C	87	-	A-136	A-184	A-214

Notes: [1] Refer to Technical Information Section for R1 and R2 model Overhung Load information.
[2] CNHM, CHHM, CNFM, CHFM, CNVM, CVVM are type designations, see page A-3.
[3] For Inverter Duty, single reduction, see pages A-154~163; double reduction, see pages A-164~175. For Single Phase, see page A-244.
[4] For Single Phase, see page A-245.
[5] For type CVFM, single reduction, see page A-219; double reduction, see page A-240.
[6] [H] indicates a high center height unit.

15 HP, 11 kW, 60 Hz, 1750 RPM

Output Speed	Output Torque		Service Factor		Overhung Load[1]		Selection					Option	Dimension Page[2]		
RPM	in•lb	N•m	SF	AGMA Class	lb	N	HP Symbol	Frame Size	Shaft Spec.	AGMA Class	Ratio	Inverter Duty	CNHM CHHM[3]	CNVM CVVM[4]	CNFM CHFM[5]
16.8	35900	4060	-	-	8460	37700	15	6180DB	Y		104	AV	A-142	A-192	A-230
	43400	4900	-	-	8370	37300	15	6185DB	Y		104	AV	A-142	A-192	A-230
	49700	5620	1.08	I	11800	52500	15	6195DB	Y	A	104	AV	A-142	A-192	A-230
14.5	42600	4810	-	-	8980	40000	15	6185DB	Y		121	AV	A-142	A-192	A-230
	56500	6380	-	-	12600	55900	15	6190DB	Y		121	AV	A-142	A-192	A-230
	57900	6540	1.08	I	12600	55900	15	6195DB	Y	A	121	AV	A-142	A-192	A-230
			1.08	I	18900	84100	15	6205DB	Y	A	121	AV	A-146	A-196	A-232
			1.74	III	22900	102000	15	6215DB	Y	C	121	AV	A-146	A-196	A-232
			2.06	III	24200	108000	15	6225DB	Y	C	121	-	A-146	A-196	A-232
			2.31	III	30300	135000	15	6235DA	Y	C	121	AV	A-146	A-196	A-236
12.2	56500	6380	-	-	13100	58400	15	6190DB	Y		143	AV	A-142	A-192	A-230
	68400	7730	0.98	-	13000	57900	15	6195DB	Y		143	AV	A-142	A-192	A-230
10.6	56500	6380	-	-	13200	58900	15	6190DB	Y		165	AV	A-142	A-192	A-230
	70000	7910	-	-	13100	58300	15	6195DB	Y		165	AV	A-142	A-192	A-230
	78800	8910	1.04	I	18900	84100	15	6205DB	Y	A	165	AV	A-146	A-196	A-232
			1.08	I	23400	104000	15	6215DA	Y	A	165	AV	A-146	A-196	A-232
			1.37	II	23400	104000	15	6215DB	Y	B	165	AV	A-146	A-196	A-232
			1.62	III	26300	117000	15	6225DB	Y	C	165	-	A-146	A-196	A-232
			2.20	III	32600	145000	15	6235DA	Y	C	165	AV	A-146	A-196	A-236
8.97	70000	7910	-	-	13100	58300	15	6195DB	Y		195	AV	A-142	A-192	A-230
	82000	9270	-	-	18900	84100	15	6205DB	Y		195	AV	A-146	A-196	A-232
	92900	10500	1.08	I	23400	104000	15	6215DA	Y	A	195	AV	A-146	A-196	A-232
			1.37	II	27400	122000	15	6225DB	Y	B	195	-	A-146	A-196	A-232
			1.86	III	34100	152000	15	6235DA	Y	C	195	AV	A-146	A-196	A-236
			2.17	III	38200	170000	15	6245DA	Y	C	195	AV	A-150	A-200	A-236
7.58	82000	9270	-	-	18900	84100	15	6205DB	Y		231	AV	A-146	A-196	A-232
	111000	12500	1.00	I	23400	104000	15	6215DA	Y	A	231	AV	A-146	A-196	A-232
			1.18	I	29200	130000	15	6225DB	Y	A	231	-	A-146	A-196	A-232
			1.51	II	36600	163000	15	6235DA	Y	B	231	AV	A-146	A-196	A-236
			2.07	III	40600	181000	15	6245DA	Y	C	231	AV	A-150	A-200	A-236
			2.48	III	49600	221000	15	6255DA	Y	C	231	-	A-150	A-200	A-236
6.41	111000	12500	-	-	23400	104000	15	6215DA	Y		273	AV	A-146	A-196	A-232
	130000	14700	1.00	I	30800	137000	15	6225DA	Y	A	273	AV	A-146	A-196	A-232
			1.28	I	38400	171000	15	6235DA	Y	A	273	AV	A-146	A-196	A-236
			1.75	III	42700	190000	15	6245DA	Y	C	273	AV	A-150	A-200	A-236
			2.10	III	52100	232000	15	6255DA	Y	C	273	-	A-150	A-200	A-236
			3.12	III	62000	276000	15	6265DA	Y	C	273	-	A-150	A-200	A-236
5.49	112000	12700	-	-	23400	104000	15	6215DA	Y		319	AV	A-146	A-196	A-232
	133000	15000	-	-	31900	142000	15	6225DA	Y		319	AV	A-146	A-196	A-232
	152000	17200	1.10	I	39700	177000	15	6235DA	Y	A	319	AV	A-146	A-196	A-236
			1.50	II	44500	198000	15	6245DA	Y	B	319	AV	A-150	A-200	A-236
			1.88	III	54800	244000	15	6255DA	Y	C	319	-	A-150	A-200	A-236
			2.67	III	62000	276000	15	6265DA	Y	C	319	-	A-150	A-200	A-236
4.64	133000	15000	-	-	32600	145000	15	6225DA	Y		377	AV	A-146	A-196	A-232
	167000	18900	-	-	40200	179000	15	6235DA	Y		377	AV	A-146	A-196	A-236
	180000	20400	1.27	I	46700	208000	15	6245DA	Y	A	377	AV	A-150	A-200	A-236
			1.59	II	57500	256000	15	6255DA	Y	B	377	-	A-150	A-200	A-236
			2.26	III	62000	276000	15	6265DA	Y	C	377	-	A-150	A-200	A-236

Notes: [1] Refer to Technical Information Section for R1 and R2 model Overhung Load information.
[2] CNHM, CHHM, CNFM, CHFM, CNVM, CVVM are type designations, see page A-3.
[3] For Inverter Duty, single reduction, see pages A-154~163; double reduction, see pages A-164~175. For Single Phase, see page A-244.
[4] For Single Phase, see page A-245.
[5] For type CVFM, single reduction, see page A-219; double reduction, see page A-240.

SELECTION TABLES – 60 Hz

15 HP, 11 kW, 60 Hz, 1750 RPM

Output Speed	Output Torque		Service Factor		Overhung Load[1]		Selection					Option	Dimension Page[2]		
RPM	in•lb	N•m	SF	AGMA Class	lb	N	HP Symbol	Frame Size	Shaft Spec.	AGMA Class	Ratio	Inverter Duty	CNHM CHHM[3]	CNVM CVVM[4]	CNFM CHFM[5]
3.70	181000	20500	-	-	40200	179000	15	6235DA	Y		473	AV	A-146	A-196	A-236
	227000	25600	1.01	I	46700	208000	15	6245DA	Y	A	473	AV	A-150	A-200	A-236
			1.35	II	57900	258000	15	6255DA	Y	B	473	-	A-150	A-200	A-236
			1.80	III	62000	276000	15	6265DA	Y	C	473	-	A-150	A-200	A-236
			2.67	III	55700	248000	15	6275DA	Y	C	473	-	A-150	A-200	[6]
3.13	228000	25800	-	-	46700	208000	15	6245DA	Y		559	AV	A-150	A-200	A-236
	267000	30200	1.14	I	57900	258000	15	6255DA	Y	A	559	-	A-150	A-200	A-236
			1.52	II	62000	276000	15	6265DA	Y	B	559	-	A-150	A-200	A-236
			2.26	III	55700	248000	15	6275DA	Y	C	559	-	A-150	A-200	[6]
2.70	228000	25800	-	-	46700	208000	15	6245DA	Y		649	AV	A-150	A-200	A-236
	311000	35100	0.98	-	57900	258000	15	6255DA	Y		649	-	A-150	A-200	A-236
			1.31	II	62000	276000	15	6265DA	Y	B	649	-	A-150	A-200	A-236
			1.95	III	55700	248000	15	6275DA	Y	C	649	-	A-150	A-200	[6]
2.39	305000	34500	-	-	57900	258000	15	6255DA	Y		731	AV	A-150	A-200	A-236
	349000	39500	1.16	I	62000	276000	15	6265DA	Y	A	731	-	A-150	A-200	A-236
			1.73	III	55700	248000	15	6275DA	Y	C	731	-	A-150	A-200	[6]
2.08	288000	32500	-	-	57900	258000	15	6255DA	Y		841	AV	A-150	A-200	A-236
	402000	45400	1.01	I	62000	276000	15	6265DA	Y	A	841	-	A-150	A-200	A-236
			1.50	II	55700	248000	15	6275DA	Y	B	841	-	A-150	A-200	[6]
1.74	407000	46000	-	-	62000	276000	15	6265DA	Y		1003	-	A-150	A-200	A-236
	480000	54200	1.26	I	55700	248000	15	6275DA	Y	A	1003	-	A-150	A-200	[6]
1.40	596000	67400	1.01	I	55700	248000	15	6275DA	Y	A	1247	-	A-150	A-200	[6]
1.18	603000	68200	-	-	55000	245000	15	6275DA	Y		1479	-	A-150	A-200	[6]

20 HP, 15 kW, 60 Hz, 1750 (1165 RPM where noted)

Output Speed	Output Torque		Service Factor		Overhung Load[1]		Selection[7]					Option[7]	Dimension Page[2]		
RPM	in•lb	N•m	SF	AGMA Class	lb	N	HP Symbol	Frame Size	Shaft Spec.	AGMA Class	Ratio	Inverter Duty	CNHM CHHM[3]	CNVM CVVM[4]	CNFM CHFM[5]
292	4130	467	1.01	I	1960	8730	20	6145[H]	Y	A	6	-	A-128	A-180	A-208
			1.35	II	2170	9670	20	6160	Y	B	6	AV	A-128	A-180	A-208
			1.61	III	2170	9670	20	6165[H]	Y	C	6	AV[H]	A-128	A-180	A-208
			1.84	III	2450	10900	20	6170	Y	C	6	AV	A-132	A-180	A-210
219	5500	622	1.01	I	2170	9660	20	6145[H]	Y	A	8	-	A-128	A-180	A-208
			1.31	II	2420	10800	20	6160	Y	B	8	AV	A-128	A-180	A-208
			1.61	III	2420	10800	20	6165[H]	Y	C	8	AV[H]	A-128	A-180	A-208
			1.84	III	2720	12100	20	6170	Y	C	8	AV	A-132	A-180	A-210
159	7570	855	1.01	I	2420	10800	20	6145[H]	Y	A	11	-	A-128	A-180	A-208
			1.31	II	2740	12200	20	6160	Y	B	11	AV	A-128	A-180	A-208
			1.61	III	2740	12200	20	6165[H]	Y	C	11	AV[H]	A-128	A-180	A-208
			1.84	III	3120	13900	20	6170	Y	C	11	AV	A-132	A-180	A-210
135	8940	1010	1.01	I	2470	11000	20	6145[H]	Y	A	13	-	A-128	A-180	A-208
			1.51	II	2850	12700	20	6165[H]	Y	B	13	AV[H]	A-128	A-180	A-208
			1.82	III	3260	14500	20	6170	Y	C	13	AV	A-132	A-180	A-210
117	10400	1170	1.01	I	2580	11500	20	6145[H]	Y	A	15	-	A-128	A-180	A-208
			1.25	I	3030	13500	20	6160	Y	A	15	AV	A-128	A-180	A-208
			1.51	II	3030	13500	20	6165[H]	Y	B	15	AV[H]	A-128	A-180	A-208
			1.70	III	3410	15200	20	6170	Y	C	15	AV	A-132	A-180	A-210
			2.01	III	3410	15200	20	6175	Y	C	15	AV	A-132	A-180	A-210

Notes: [1] Refer to Technical Information Section for R1 and R2 model Overhung Load information.
[2] CNHM, CHHM, CNFM, CHFM, CNVM, CVVM are type designations, see page A-3.
[3] For Inverter Duty, single reduction, see pages A-154~163; double reduction, see pages A-164~175. For Single Phase, see page A-244.
[4] For Single Phase, see page A-245.
[5] For type CVFM, single reduction, see page A-219; double reduction, see page A-240.
[6] Consult factory for frame size 6275DA.
[7] [H] indicates a high center height unit.

20 HP, 15 kW, 60 Hz, 1750 (1165 RPM where noted)

Output Speed	Output Torque		Service Factor		Overhung Load[1]		Selection[6]					Option[6]	Dimension Page[2]		
RPM	in•lb	N•m	SF	AGMA Class	lb	N	HP Symbol	Frame Size	Shaft Spec.	AGMA Class	Ratio	Inverter Duty	CNHM CHHM[3]	CNVM CVVM[4]	CNFM CHFM[5]
103	11700	1320	0.80	-	2690	12000	20	6145[H]	Y		17	-	A-128	A-180	A-208
			1.25	I	3120	13900	20	6165[H]	Y	A	17	AV[H]	A-128	A-180	A-208
			1.31	II	3550	15800	20	6170	Y	B	17	AV	A-132	A-180	A-210
			1.61	III	3550	15800	20	6175	Y	C	17	AV	A-132	A-180	A-210
			2.04	III	4800	21400	20	6180	Y	C	17	AV	A-132	A-180	A-210
83.3	14400	1630	1.07	I	3320	14800	20	6165[H]	Y	A	21	AV[H]	A-128	A-180	A-208
			1.30	II	3820	17000	20	6170	Y	B	21	AV	A-132	A-180	A-210
			1.61	III	3820	17000	20	6175	Y	C	21	AV	A-132	A-180	A-210
			2.00	III	5140	22900	20	6180	Y	C	21	AV	A-132	A-180	A-210
70.0	17200	1940	1.01	I	3460	15400	20	6165[H]	Y	A	25	AV[H]	A-128	A-180	A-208
			1.05	I	3930	17500	20	6170	Y	A	25	AV	A-132	A-180	A-210
			1.30	II	3930	17500	20	6175	Y	B	25	AV	A-132	A-180	A-210
			1.61	III	5340	23800	20	6180	Y	C	25	AV	A-132	A-180	A-210
			2.01	III	5340	23800	20	6185	Y	C	25	AV	A-132	A-180	A-210
60.3	20000	2260	1.25	I	4130	18400	20	6175	Y	A	29	AV	A-132	A-180	A-210
			1.30	II	5590	24900	20	6180	Y	B	29	AV	A-132	A-180	A-210
			1.61	III	5590	24900	20	6185	Y	C	29	AV	A-132	A-180	A-210
			2.05	III	7900	35200	20	6190	Y	C	29	AV	A-132	A-180	A-210
50.0	24100	2720	1.01	I	4360	19400	20	6175	Y	A	35	AV	A-132	A-180	A-210
			1.25	I	5950	26500	20	6180	Y	A	35	AV	A-132	A-180	A-210
			1.51	II	5950	26500	20	6185	Y	B	35	AV	A-132	A-180	A-210
			1.62	III	8330	37100	20	6190	Y	C	35	AV	A-132	A-180	A-210
			2.01	III	8330	37100	20	6195	Y	C	35	AV	A-132	A-180	A-210
40.7	29600	3340	1.25	I	6350	28300	20	6185	Y	A	43	AV	A-132	A-180	A-210
			1.39	II	8960	39900	20	6190	Y	B	43	AV	A-132	A-180	A-210
			2.01	III	8960	39900	20	6195	Y	C	43	AV	A-132	A-180	A-210
34.3	35100	3970	1.01	I	6560	29200	20	6185	Y	A	51	AV	A-132	A-180	A-210
			1.39	II	9320	41500	20	6195	Y	B	51	AV	A-132	A-180	A-210
29.7	40600	4590	0.80	-	6830	30400	20	6185	Y		59	AV	A-132	A-180	A-210
			1.25	I	9740	43400	20	6195	Y	A	59	AV	A-132	A-180	A-210
			1.51	II	17900	79700	20	6205	Y	B	59	-	A-132	A-184	A-214
			2.51	III	18300	81300	20	6215	Y	C	59	-	A-136	A-184	A-214
24.6	48800	5520	1.04	I	10300	45900	20	6195	Y	A	71	AV	A-132	A-180	A-210
20.1	59900	6770	0.91	-	11000	49200	20	6195	Y		87	AV	A-132	A-180	A-210
			1.06	I	18900	84100	20	6205	Y	A	87	-	A-132	A-184	A-214
			1.43	II	20400	91000	20	6215	Y	B	87	-	A-136	A-184	A-214
19.7	61000	6890	1.30	II	18900	84100	206	6205	Y	B	59	-	A-132	A-184	A-214
			1.83	III	20500	91500	206	6215	Y	C	59	-	A-136	A-184	A-214
			2.22	III	21800	97000	206	6225	Y	C	59	-	A-136	A-184	A-214
16.8	67800	7660	0.80	-	11800	52400	20	6195DB	Y		104	-	A-132	A-180	A-210
14.5	62700	7090	-	-	12500	55700	20	6195DB	Y		121	-	A-132	A-180	A-210
	78800	8910	0.80	-	18900	84100	20	6205DB	Y		121	-	A-132	A-184	A-214
			1.28	I	22700	101000	20	6215DB	Y	A	121	AV	A-136	A-184	A-214
			1.51	II	23800	106000	20	6225DB	Y	B	121	AV	A-136	A-184	A-214
			1.69	III	30300	135000	20	6235DA	Y	C	121	AV	A-136	A-184	A-214
			2.30	III	33700	150000	20	6245DB	Y	C	121	-	A-136	A-188	A-214

Notes: [1] Refer to Technical Information Section for R1 and R2 model Overhung Load information.
[2] CNHM, CHHM, CNFM, CHFM, CNVM, CVVM are type designations, see page A-3.
[3] For Inverter Duty, single reduction, see pages A-154~163; double reduction, see pages A-164~175. For Single Phase, see page A-244.
[4] For Single Phase, see page A-245.
[5] For type CVFM, single reduction, see page A-219; double reduction, see page A-240.
[6] [H] indicates a high center height unit.

SELECTION TABLES – 60 Hz

20 HP, 15 kW, 60 Hz, 1750 (1165 RPM where noted)

Output Speed	Output Torque		Service Factor		Overhung Load[1]		Selection					Option	Dimension Page[2]		
RPM	in•lb	N•m	SF	AGMA Class	lb	N	HP Symbol	Frame Size	Shaft Spec.	AGMA Class	Ratio	Inverter Duty	CNHM CHHM[3]	CNVM CVVM[4]	CNFM CHFM[5]
13.4	90200	10200	1.48	II	24200	108000	206	6225	Y	B	87	-	A-136	A-184	A-214
			1.60	III	30300	135000	206	6235	Y	C	87	-	A-136	A-184	A-214
			2.14	III	33900	151000	206	6245	Y	C	87	-	A-136	A-188	A-214
10.6	82000	9270	-	-	18900	84100	20	6205DB	Y		165	-	A-146	A-196	A-232
	108000	12200	0.80	-	23400	104000	20	6215DA	Y		165	-	A-146	A-196	A-232
			1.00	I	23400	104000	20	6215DB	Y	A	165	AV	A-146	A-196	A-232
			1.19	I	25800	115000	20	6225DB	Y	A	165	AV	A-146	A-196	A-232
			1.61	III	32300	144000	20	6235DA	Y	C	165	AV	A-146	A-196	A-236
			1.69	III	36100	161000	20	6245DA	Y	C	165	AV	A-150	A-200	A-236
			2.16	III	36100	161000	20	6245DB	Y	C	165	-	A-150	A-200	A-236
8.97	101000	11400	-	-	23400	104000	20	6215DA	Y		195	-	A-146	A-196	A-232
	127000	14400	1.01	I	27400	122000	20	6225DB	Y	A	195	AV	A-146	A-196	A-232
			1.37	II	33900	151000	20	6235DA	Y	B	195	AV	A-146	A-196	A-236
			1.59	II	37900	169000	20	6245DA	Y	B	195	AV	A-150	A-200	A-236
			2.12	III	46500	207000	20	6255DA	Y	C	195	AV	A-150	A-200	A-236
7.58	119000	13500	-	-	29200	130000	20	6225DA	Y		231	-	A-146	A-196	A-232
	150000	17000	1.11	I	36400	162000	20	6235DA	Y	A	231	AV	A-146	A-196	A-236
			1.52	II	40400	180000	20	6245DA	Y	B	231	AV	A-150	A-200	A-236
			1.82	III	49400	220000	20	6255DA	Y	C	231	AV	A-150	A-200	A-236
			2.70	III	60400	269000	20	6265DA	Y	C	231	-	A-150	A-200	A-236
6.41	167000	18900	-	-	38200	170000	20	6235DA	Y		273	AV	A-146	A-196	A-236
	178000	20100	1.28	I	42400	189000	20	6245DA	Y	A	273	AV	A-150	A-200	A-236
			1.54	II	51400	229000	20	6255DA	Y	B	273	AV	A-150	A-200	A-236
			2.29	III	62000	276000	20	6265DA	Y	C	273	-	A-150	A-200	A-236
5.49	167000	18900	-	-	39700	177000	20	6235DA	Y		319	AV	A-146	A-196	A-236
	208000	23500	1.10	I	44200	197000	20	6245DA	Y	A	319	AV	A-150	A-200	A-236
			1.38	II	54600	243000	20	6255DA	Y	B	319	AV	A-150	A-200	A-236
			1.96	III	62000	276000	20	6265DA	Y	C	319	-	A-150	A-200	A-236
			2.90	III	55700	248000	20	6275DA	Y	C	319	-	A-150	A-200	[6]
4.64	228000	25800	-	-	46500	207000	20	6245DA	Y		377	AV	A-150	A-200	A-236
	246000	27800	1.17	I	57300	255000	20	6255DA	Y	A	377	AV	A-150	A-200	A-236
			1.66	III	62000	276000	20	6265DA	Y	C	377	-	A-150	A-200	A-236
			2.46	III	55700	248000	20	6275DA	Y	C	377	-	A-150	A-200	[6]
3.70	228000	25800	-	-	46700	208000	20	6245DA	Y		473	AV	A-150	A-200	A-236
	308000	34800	0.98	-	57900	258000	20	6255DA	Y		473	AV	A-150	A-200	A-236
			1.32	II	62000	276000	20	6265DA	Y	B	473	-	A-150	A-200	A-236
			1.96	III	55700	248000	20	6275DA	Y	C	473	-	A-150	A-200	[6]
3.13	305000	34500	-	-	57900	258000	20	6255DA	Y		559	AV	A-150	A-200	A-236
	365000	41200	1.12	I	62000	276000	20	6265DA	Y	A	559	-	A-150	A-200	A-236
			1.66	III	55700	248000	20	6275DA	Y	C	559	-	A-150	A-200	[6]
2.70	423000	47800	0.96	-	62000	276000	20	6265DA	Y		649	-	A-150	A-200	A-236
			1.43	II	55700	248000	20	6275DA	Y	B	649	-	A-150	A-200	[6]
2.39	407000	46000	-	-	62000	276000	20	6265DA	Y		731	-	A-150	A-200	A-236
	477000	53900	1.27	I	55700	248000	20	6275DA	Y	A	731	-	A-150	A-200	[6]
2.08	407000	46000	-	-	62000	276000	20	6265DA	Y		841	AV	A-150	A-200	A-236
	549000	62000	1.10	I	55700	248000	20	6275DA	Y	A	841	AV	A-150	A-200	[6]
1.74	603000	68200	-	-	55700	248000	20	6275DA	Y		1003	-	A-150	A-200	[6]
1.40	603000	68200	-	-	55700	248000	20	6275DA	Y		1247	AV	A-150	A-200	[6]

Notes: [1] Refer to Technical Information Section for R1 and R2 model Overhung Load information.
[2] CNHM, CHHM, CNFM, CHFM, CNVM, CVVM are type designations, see page A-3.
[3] For Inverter Duty, single reduction, see pages A-154~163; double reduction, see pages A-164~175. For Single Phase, see page A-244.
[4] For Single Phase, see page A-245.
[5] For type CVFM, single reduction, see page A-219; double reduction, see page A-240.
[6] Consult factory for frame size 6275DA.

25 HP, 18.5 kW, 60 Hz, 1750 (1165 RPM where noted)

Output Speed	Output Torque		Service Factor		Overhung Load[1]		Selection[6]					Option	Dimension Page[2]		
RPM	in•lb	N•m	SF	AGMA Class	lb	N	HP Symbol	Frame Size	Shaft Spec.	AGMA Class	Ratio	Inverter Duty	CNHM CHHM[3]	CNVM CVVM[4]	CNFM CHFM[5]
292	5090	575	1.10	I	2150	9590	25	6160	Y	A	6	-	A-128	A-180	A-208
			1.30	II	2150	9590	25	6165[H]	Y	B	6	-	A-128	A-180	A-208
			1.63	III	2450	10900	25	6175	Y	C	6	AV	A-132	A-180	A-210
219	6790	767	1.06	I	2400	10700	25	6160	Y	A	8	-	A-128	A-180	A-208
			1.30	II	2400	10700	25	6165[H]	Y	B	8	-	A-128	A-180	A-208
			1.63	III	2690	12000	25	6175	Y	C	8	AV	A-132	A-180	A-210
159	9380	1060	1.06	I	2720	12100	25	6160	Y	A	11	-	A-128	A-180	A-208
			1.30	II	2720	12100	25	6165[H]	Y	B	11	-	A-128	A-180	A-208
			1.63	III	3100	13800	25	6175	Y	C	11	AV	A-132	A-180	A-210
			1.90	III	4130	18400	25	6180	Y	C	11	AV	A-132	A-180	A-210
135	11100	1250	1.22	I	2830	12600	25	6165[H]	Y	A	13	-	A-128	A-180	A-208
			1.48	II	3210	14300	25	6170	Y	B	13	AV	A-132	A-180	A-210
			1.63	III	3210	14300	25	6175	Y	C	13	AV	A-132	A-180	A-210
			1.90	III	4290	19100	25	6180	Y	C	13	AV	A-132	A-180	A-210
117	12700	1440	1.22	I	2990	13300	25	6165[H]	Y	A	15	-	A-128	A-180	A-208
			1.38	II	3370	15000	25	6170	Y	B	15	AV	A-132	A-180	A-210
			1.63	III	3370	15000	25	6175	Y	C	15	AV	A-132	A-180	A-210
			1.75	III	4540	20200	25	6180	Y	C	15	AV	A-132	A-180	A-210
103	14400	1630	1.02	I	3050	13600	25	6165[H]	Y	A	17	-	A-128	A-180	A-208
			1.30	II	3500	15600	25	6175	Y	B	17	AV	A-132	A-180	A-210
			1.65	III	4780	21300	25	6180	Y	C	17	AV	A-132	A-180	A-210
			2.11	III	4780	21300	25	6185	Y	C	17	AV	A-132	A-180	A-210
83.3	17800	2010	1.05	I	3770	16800	25	6170	Y	A	21	AV	A-132	A-180	A-210
			1.30	II	3770	16800	25	6175	Y	B	21	AV	A-132	A-180	A-210
			1.62	III	5120	22800	25	6180	Y	C	21	AV	A-132	A-180	A-210
			2.11	III	5120	22800	25	6185	Y	C	21	AV	A-132	A-180	A-210
70.0	21200	2400	1.05	I	3880	17300	25	6175	Y	A	25	AV	A-132	A-180	A-210
			1.30	II	5320	23700	25	6180	Y	B	25	AV	A-132	A-180	A-210
			1.63	III	5320	23700	25	6185	Y	C	25	AV	A-132	A-180	A-210
			1.90	III	7480	33300	25	6190	Y	C	25	AV	A-132	A-180	A-210
60.3	24600	2780	1.02	I	4060	18100	25	6175	Y	A	29	AV	A-132	A-180	A-210
			1.05	I	5550	24700	25	6180	Y	A	29	AV	A-132	A-180	A-210
			1.30	II	5550	24700	25	6185	Y	B	29	AV	A-132	A-180	A-210
			1.66	III	7860	35000	25	6190	Y	C	29	AV	A-132	A-180	A-210
			2.04	III	7860	35000	25	6195	Y	C	29	AV	A-132	A-180	A-210
50.0	29700	3360	1.22	I	5910	26300	25	6185	Y	A	35	AV	A-132	A-180	A-210
			1.31	II	8290	36900	25	6190	Y	B	35	AV	A-132	A-180	A-210
			1.63	III	8290	36900	25	6195	Y	C	35	AV	A-132	A-180	A-210
40.7	36500	4120	1.02	I	6290	28000	25	6185	Y	A	43	AV	A-132	A-180	A-210
			1.13	I	8890	39600	25	6190	Y	A	43	AV	A-132	A-180	A-210
			1.63	III	8890	39600	25	6195	Y	C	43	AV	A-132	A-180	A-210
			1.72	III	16400	73200	25	6205	Y	C	43	-	A-132	A-184	A-214
			2.44	III	16800	74700	25	6215	Y	C	43	-	A-136	A-184	A-214
34.3	43300	4890	0.82	-	6490	28900	25	6185	Y		51	AV	A-132	A-180	A-210
			1.13	I	9270	41300	25	6195	Y	A	51	AV	A-132	A-180	A-210
29.7	50100	5660	1.02	I	9680	43100	25	6195	Y	A	59	AV	A-132	A-180	A-210
			1.22	I	17800	79200	25	6205	Y	A	59	-	A-132	A-184	A-214
			2.04	III	18200	81100	25	6215	Y	C	59	-	A-136	A-184	A-214

Notes: [1] Refer to Technical Information Section for R1 and R2 model Overhung Load information.
[2] CNHM, CHHM, CNFM, CHFM, CNVM, CVVM are type designations, see page A-3.
[3] For Inverter Duty, single reduction, see pages A-154~163; double reduction, see pages A-164~175. For Single Phase, see page A-244.
[4] For Single Phase, see page A-245.
[5] For type CVFM, single reduction, see page A-219; double reduction, see page A-240.
[6] [H] indicates a high center height unit.

SELECTION TABLES – 60 Hz

25 HP, 18.5 kW, 60 Hz, 1750 (1165 RPM where noted)

Output Speed	Output Torque		Service Factor		Overhung Load[1]		Selection					Option	Dimension Page[2]		
RPM	in•lb	N•m	SF	AGMA Class	lb	N	HP Symbol	Frame Size	Shaft Spec.	AGMA Class	Ratio	Inverter Duty	CNHM CHHM[3]	CNVM CVVM[4]	CNFM CHFM[5]
27.1	54800	6190	1.24	I	10100	45000	256	6195	Y	A	43	-	A-132	A-180	A-210
			1.50	II	16300	72500	256	6205	Y	B	43	-	A-132	A-184	A-214
			2.04	III	18900	84100	256	6215	Y	C	43	-	A-136	A-184	A-214
			2.58	III	20000	89100	256	6225	Y	C	43	-	A-136	A-184	A-214
24.6	60300	6810	0.84	-	10200	45500	25	6195	Y		71	AV	A-132	A-180	A-210
20.1	73800	8340	1.16	I	20300	90600	25	6215	Y	A	87	-	A-136	A-184	A-214
			1.44	II	21600	96100	25	6225	Y	B	87	-	A-136	A-184	A-214
19.7	75200	8500	1.49	II	20500	91100	256	6215	Y	B	59	-	A-136	A-184	A-214
			1.80	III	21700	96700	256	6225	Y	C	59	-	A-136	A-184	A-214
			2.04	III	26900	120000	256	6235	Y	C	59	-	A-136	A-184	A-214
14.5	97300	11000	1.03	I	22700	101000	25	6215DB	Y	A	121	-	A-146	A-196	A-214
			1.22	I	24000	107000	25	6225DB	Y	A	121	AV	A-146	A-196	A-214
			1.37	II	30100	134000	25	6235DA	Y	B	121	-	A-146	A-196	A-214
			1.86	III	33200	148000	25	6245DB	Y	C	121	-	A-150	A-200	A-214
			2.50	III	41300	184000	25	6255DB	Y	C	121	-	A-150	A-200	A-214
13.4	111000	12500	1.20	I	24200	108000	256	6225	Y	A	87	-	A-136	A-184	A-214
			1.30	II	30100	134000	256	6235	Y	B	87	AV	A-136	A-184	A-214
			1.74	III	33900	151000	256	6245	Y	C	87	-	A-136	A-188	A-214
			2.32	III	41800	186000	256	6255	Y	C	87	-	A-136	A-188	A-218
10.6	133000	15000	0.97	-	25800	115000	25	6225DB	Y		165	AV	A-146	A-196	A-232
			1.31	II	32300	144000	25	6235DA	Y	B	165	-	A-146	A-196	A-236
			1.31	II	32300	144000	25	6235DB	Y	B	165	AV	A-146	A-196	A-236
			1.37	II	36100	161000	25	6245DA	Y	B	165	-	A-150	A-200	A-236
			2.08	III	44200	197000	25	6255DB	Y	C	165	-	A-150	A-200	A-236
			2.74	III	53900	240000	25	6265DA	Y	C	165	-	A-150	A-200	A-236
8.97	157000	17700	1.11	I	33900	151000	25	6235DA	Y	A	195	-	A-146	A-196	A-236
			1.11	I	33900	151000	25	6235DB	Y	A	195	AV	A-146	A-196	A-236
			1.29	I	37900	169000	25	6245DA	Y	A	195	-	A-150	A-200	A-236
			1.48	II	37900	169000	25	6245DB	Y	B	195	AV	A-150	A-200	A-236
			1.72	III	46500	207000	25	6255DA	Y	C	195	AV	A-150	A-200	A-236
			2.47	III	56600	252000	25	6265DA	Y	C	195	-	A-150	A-200	A-236
7.58	167000	18900	-	-	36400	162000	25	6235DA	Y		231	-	A-146	A-196	A-236
	186000	21000	1.23	I	40400	180000	25	6245DB	Y	A	231	AV	A-150	A-200	A-236
			1.48	II	48900	218000	25	6255DA	Y	B	231	AV	A-150	A-200	A-236
			2.19	III	60400	269000	25	6265DA	Y	C	231	-	A-150	A-200	A-236
6.41	219000	24800	1.04	I	42200	188000	25	6245DA	Y	A	273	-	A-150	A-200	A-236
			1.04	I	42200	188000	25	6245DB	Y	A	273	AV	A-150	A-200	A-236
			1.25	I	51600	230000	25	6255DA	Y	A	273	AV	A-150	A-200	A-236
			1.85	III	62000	276000	25	6265DA	Y	C	273	-	A-150	A-200	A-236
5.49	228000	25800	-	-	44000	196000	25	6245DA	Y		319	-	A-150	A-200	A-236
	257000	29000	1.12	I	54300	242000	25	6255DA	Y	A	319	AV	A-150	A-200	A-236
			1.59	II	62000	276000	25	6265DA	Y	B	319	-	A-150	A-200	A-236
			2.35	III	55700	248000	25	6275DA	Y	C	319	-	A-150	A-200	[6]
4.64	288000	32500	-	-	57000	254000	25	6255DA	Y		377	AV	A-150	A-200	A-236
	303000	34300	1.34	II	62000	276000	25	6265DA	Y	B	377	-	A-150	A-200	A-236
			1.99	III	55700	248000	25	6275DA	Y	C	377	-	A-150	A-200	[6]
3.70	380000	43000	1.07	I	62000	276000	25	6265DA	Y	A	473	-	A-150	A-200	A-236
			1.59	II	55700	248000	25	6275DA	Y	B	473	-	A-150	A-200	[6]

Notes: [1] Refer to Technical Information Section for R1 and R2 model Overhung Load information.
[2] CNHM, CHHM, CNFM, CHFM, CNVM, CVVM are type designations, see page A-3.
[3] For Inverter Duty, single reduction, see pages A-154~163; double reduction, see pages A-164~175. For Single Phase, see page A-244.
[4] For Single Phase, see page A-245.
[5] For type CVFM, single reduction, see page A-219; double reduction, see page A-240.
[6] Consult factory for frame size 6275DA.

25 HP, 18.5 kW, 60 Hz, 1750 (1165 RPM where noted)

Output Speed	Output Torque		Service Factor		Overhung Load[1]		Selection					Option	Dimension Page[2]		
RPM	in•lb	N•m	SF	AGMA Class	lb	N	HP Symbol	Frame Size	Shaft Spec.	AGMA Class	Ratio	Inverter Duty	CNHM CHHM[3]	CNVM CVVM[4]	CNFM CHFM[5]
3.13	407000	46000	-	-	62000	276000	25	6265DA	Y		559	-	A-150	A-200	A-236
	449000	50800	1.34	II	55700	248000	25	6275DA	Y	B	559	-	A-150	A-200	[6]
2.70	522000	59000	1.16	I	55700	248000	25	6275DA	Y	A	649	-	A-150	A-200	[6]
2.39	588000	66400	1.03	I	55700	248000	25	6275DA	Y	A	731	-	A-150	A-200	[6]
2.08	603000	68200	-	-	55700	248000	25	6275DA	Y		841	AV	A-150	A-200	[6]

30 HP, 22 kW, 60 Hz, 1750 (1165 RPM where noted)

Output Speed	Output Torque		Service Factor		Overhung Load[1]		Selection[7]					Option	Dimension Page[2]		
RPM	in•lb	N•m	SF	AGMA Class	lb	N	HP Symbol	Frame Size	Shaft Spec.	AGMA Class	Ratio	Inverter Duty	CNHM CHHM[3]	CNVM CVVM[4]	CNFM CHFM[5]
292	6050	684	1.10	I	2140	9510	30	6165[H]	Y	A	6	-	A-128	A-180	A-208
			1.37	II	2420	10800	30	6175	Y	B	6	AV	A-132	A-180	A-210
219	8070	912	1.10	I	2380	10600	30	6165[H]	Y	A	8	-	A-128	A-180	A-208
			1.37	II	2670	11900	30	6175	Y	B	8	AV	A-132	A-180	A-210
159	11100	1250	1.10	I	2670	11900	30	6165[H]	Y	A	11	-	A-128	A-180	A-208
			1.37	II	3080	13700	30	6175	Y	B	11	AV	A-132	A-180	A-210
			1.60	III	4110	18300	30	6180	Y	C	11	AV	A-132	A-180	A-210
			1.77	III	4110	18300	30	6185	Y	C	11	AV	A-132	A-180	A-210
135	13100	1480	1.03	I	2780	12400	30	6165[H]	Y	A	13	-	A-128	A-180	A-208
			1.37	II	3190	14200	30	6175	Y	B	13	AV	A-132	A-180	A-210
			1.60	III	4290	19100	30	6180	Y	C	13	AV	A-132	A-180	A-210
			1.77	III	4290	19100	30	6185	Y	C	13	AV	A-132	A-180	A-210
117	15100	1710	1.03	I	2940	13100	30	6165[H]	Y	A	15	-	A-128	A-180	A-208
			1.37	II	3320	14800	30	6175	Y	B	15	AV	A-132	A-180	A-210
			1.77	III	4510	20100	30	6185	Y	C	15	AV	A-132	A-180	A-210
103	17200	1940	0.86	-	3010	13400	30	6165[H]	Y		17	-	A-128	A-180	A-208
			1.10	I	3460	15400	30	6175	Y	A	17	AV	A-132	A-180	A-210
			1.39	II	4760	21200	30	6180	Y	B	17	AV	A-132	A-180	A-210
			1.77	III	4760	21200	30	6185	Y	C	17	AV	A-132	A-180	A-210
			1.86	III	6650	29600	30	6190	Y	C	17	-	A-132	A-180	A-210
83.3	21200	2400	1.10	I	3730	16600	30	6175	Y	A	21	AV	A-132	A-180	A-210
			1.36	II	5100	22700	30	6180	Y	B	21	AV	A-132	A-180	A-210
			1.77	III	5100	22700	30	6185	Y	C	21	AV	A-132	A-180	A-210
			1.86	III	7140	31800	30	6190	Y	C	21	AV	A-132	A-180	A-210
70.0	25200	2850	0.89	-	3820	17000	30	6175	Y		25	AV	A-132	A-180	A-210
			1.10	I	5280	23500	30	6180	Y	A	25	AV	A-132	A-180	A-210
			1.37	II	5280	23500	30	6185	Y	B	25	AV	A-132	A-180	A-210
			1.60	III	7450	33200	30	6190	Y	C	25	AV	A-132	A-180	A-210
			1.84	III	7450	33200	30	6195	Y	C	25	AV	A-132	A-180	A-210
60.3	29300	3310	1.10	I	5500	24500	30	6185	Y	A	29	AV	A-132	A-180	A-210
			1.40	II	7840	34900	30	6190	Y	B	29	AV	A-132	A-180	A-210
			1.72	III	7840	34900	30	6195	Y	C	29	AV	A-132	A-180	A-210
			2.08	III	14600	64900	30	6205	Y	C	29	-	A-132	A-184	A-214
50.0	35300	3990	1.03	I	5840	26000	30	6185	Y	A	35	AV	A-132	A-180	A-210
			1.37	II	8240	36700	30	6195	Y	B	35	AV	A-132	A-180	A-210

Notes: [1] Refer to Technical Information Section for R1 and R2 model Overhung Load information.
[2] CNHM, CHHM, CNFM, CHFM, CNVM, CVVM are type designations, see page A-3.
[3] For Inverter Duty, single reduction, see pages A-154~163; double reduction, see pages A-164~175. For Single Phase, see page A-244.
[4] For Single Phase, see page A-245.
[5] For type CVFM, single reduction, see page A-219; double reduction, see page A-240.
[6] Consult factory for frame size 6275DA.
[7] [H] indicates a high center height unit.

SELECTION TABLES – 60 Hz

30 HP, 22 kW, 60 Hz, 1750 (1165 RPM where noted)

Output Speed	Output Torque		Service Factor		Overhung Load[1]		Selection					Option	Dimension Page[2]		
RPM	in•lb	N•m	SF	AGMA Class	lb	N	HP Symbol	Frame Size	Shaft Spec.	AGMA Class	Ratio	Inverter Duty	CNHM CHHM[3]	CNVM CVVM[4]	CNFM CHFM[5]
40.7	43400	4900	0.86	-	6200	27600	30	6185	Y		43	AV	A-132	A-180	A-210
			0.95	-	8850	39400	30	6190	Y		43	AV	A-132	A-180	A-210
			1.37	II	8850	39400	30	6195	Y	B	43	AV	A-132	A-180	A-210
			1.45	II	16400	73000	30	6205	Y	B	43	-	A-132	A-184	A-214
			2.05	III	16700	74600	30	6215	Y	C	43	-	A-136	A-184	A-214
34.3	51500	5820	0.95	-	9210	41000	30	6195	Y		51	AV	A-132	A-180	A-210
29.7	59500	6730	0.86	-	9610	42800	30	6195	Y		59	AV	A-132	A-180	A-210
			1.03	I	17800	79200	30	6205	Y	A	59	-	A-132	A-184	A-214
			1.71	III	18100	80800	30	6215	Y	C	59	-	A-136	A-184	A-214
			2.05	III	19200	85700	30	6225	Y	C	59	-	A-136	A-184	A-214
27.1	65200	7370	1.26	I	18400	82100	306	6205	Y	A	43	-	A-132	A-184	A-214
			1.72	III	18800	83800	306	6215	Y	C	43	-	A-136	A-184	A-214
			2.17	III	20000	88900	306	6225	Y	C	43	-	A-136	A-184	A-214
20.1	87800	9920	1.21	I	21500	95700	30	6225	Y	A	87	-	A-136	A-184	A-214
19.7	89400	10100	1.25	I	20400	90700	306	6215	Y	A	59	-	A-136	A-184	A-214
			1.51	II	21600	96300	306	6225	Y	B	59	-	A-136	A-184	A-214
			2.55	III	30100	134000	306	6245	Y	C	59	-	A-136	A-188	A-214
14.5	101000	11400	-	-	22700	101000	30	6215DB	Y		121	-	A-146	A-196	A-232
	116000	13100	1.03	I	23800	106000	30	6225DB	Y	A	121	AV	A-146	A-196	A-232
			1.43	II	30100	134000	30	6235DB	Y	B	121	AV	A-146	A-196	A-236
			1.57	II	33500	149000	30	6245DB	Y	B	121	-	A-150	A-200	A-236
			2.10	III	41100	183000	30	6255DB	Y	C	121	-	A-150	A-200	A-236
			2.31	III	50300	224000	30	6265DA	Y	C	121	-	A-150	A-200	A-236
13.4	132000	14900	1.09	I	30100	134000	306	6235	Y	A	87	-	A-136	A-184	A-214
			1.46	II	33700	150000	306	6245	Y	B	87	-	A-136	A-188	A-214
			1.95	III	41500	185000	306	6255	Y	C	87	-	A-136	A-188	A-218
10.6	157000	17800	1.10	I	32100	143000	30	6235DB	Y	A	165	-	A-146	A-196	A-236
			1.47	II	35900	160000	30	6245DB	Y	B	165	-	A-150	A-200	A-236
			1.75	III	44000	196000	30	6255DB	Y	C	165	-	A-150	A-200	A-236
			2.31	III	53900	240000	30	6265DA	Y	C	165	-	A-150	A-200	A-236
8.97	173000	19600	-	-	33700	150000	30	6235DB	Y		195	-	A-146	A-196	A-236
	187000	21100	1.24	I	37700	168000	30	6245DB	Y	A	195	-	A-150	A-200	A-236
			1.48	II	45800	204000	30	6255DB	Y	B	195	-	A-150	A-200	A-236
			2.08	III	56600	252000	30	6265DA	Y	C	195	-	A-150	A-200	A-236
7.58	221000	25000	1.03	I	40200	179000	30	6245DB	Y	A	231	-	A-150	A-200	A-236
			1.24	I	49200	219000	30	6255DA	Y	A	231	-	A-150	A-200	A-236
			1.84	III	60200	268000	30	6265DA	Y	C	231	-	A-150	A-200	A-236
6.41	228000	25800	-	-	42200	188000	30	6245DB	Y		273	-	A-150	A-200	A-236
	261000	29500	1.05	I	51400	229000	30	6255DA	Y	A	273	AV	A-150	A-200	A-236
			1.56	II	62000	276000	30	6265DA	Y	B	273	-	A-150	A-200	A-236
5.49	288000	32500	-	-	54100	241000	30	6255DB	Y		319	-	A-150	A-200	A-236
	305000	34500	1.33	II	62000	276000	30	6265DA	Y	B	319	-	A-150	A-200	A-236
			1.98	III	55700	248000	30	6275DA	Y	C	319	-	A-150	A-200	[6]
4.64	360000	40700	1.13	I	62000	276000	30	6265DA	Y	A	377	-	A-150	A-200	A-236
			1.67	III	55700	248000	30	6275DA	Y	C	377	-	A-150	A-200	[6]

Notes: [1] Refer to Technical Information Section for R1 and R2 model Overhung Load information.
[2] CNHM, CHHM, CNFM, CHFM, CNVM, CVVM are type designations, see page A-3.
[3] For Inverter Duty, single reduction, see pages A-154~163; double reduction, see pages A-164~175. For Single Phase, see page A-244.
[4] For Single Phase, see page A-245.
[5] For type CVFM, single reduction, see page A-219; double reduction, see page A-240.
[6] Consult factory for frame size 6275DA.

30 HP, 22 kW, 60 Hz, 1750 (1165 RPM where noted)

Output Speed	Output Torque		Service Factor		Overhung Load[1]		Selection					Option	Dimension Page[2]		
RPM	in•lb	N•m	SF	AGMA Class	lb	N	HP Symbol	Frame Size	Shaft Spec.	AGMA Class	Ratio	Inverter Duty	CNHM CHHM[3]	CNVM CVVM[4]	CNFM CHFM[5]
3.70	407000	46000	-	-	62000	276000	30	6265DA	Y		473	-	A-150	A-200	A-236
	452000	51100	1.33	II	55700	248000	30	6275DA	Y	B	473	-	A-150	A-200	[6]
3.13	534000	60400	1.13	I	55700	248000	30	6275DA	Y	A	559	-	A-150	A-200	[6]
2.70	620000	70100	0.97	-	55700	248000	30	6275DA	Y		649	-	A-150	A-200	[6]
2.39	603000	68200	-	-	55700	248000	30	6275DA	Y		731	-	A-150	A-200	[6]

40 HP, 30 kW, 60 Hz, 1750 (1165 RPM where noted)

Output Speed	Output Torque		Service Factor		Overhung Load[1]		Selection					Option	Dimension Page[2]		
RPM	in•lb	N•m	SF	AGMA Class	lb	N	HP Symbol	Frame Size	Shaft Spec.	AGMA Class	Ratio	Inverter Duty	CNHM CHHM[3]	CNVM CVVM[4]	CNFM CHFM[5]
292	8260	933	1.00	I	2400	10700	40	6175	Y	A	6	-	A-132	A-180	A-210
219	11000	1240	1.00	I	2630	11700	40	6175	Y	A	8	-	A-132	A-180	A-210
159	15100	1710	1.00	I	3010	13400	40	6175	Y	A	11	-	A-132	A-180	A-210
			1.30	II	4090	18200	40	6185	Y	B	11	AV	A-132	A-180	A-210
			1.60	III	5730	25500	40	6195	Y	C	11	-	A-132	A-180	A-210
			1.99	III	11100	49400	40	6205	Y	C	11	-	A-132	A-184	A-214
135	17900	2020	1.00	I	3120	13900	40	6175	Y	A	13	-	A-132	A-180	A-210
			1.30	II	4220	18800	40	6185	Y	B	13	AV	A-132	A-180	A-210
			1.60	III	5950	26500	40	6195	Y	C	13	-	A-132	A-180	A-210
117	20600	2330	1.00	I	3230	14400	40	6175	Y	A	15	-	A-132	A-180	A-210
			1.30	II	4450	19800	40	6185	Y	B	15	AV	A-132	A-180	A-210
			1.60	III	6240	27800	40	6195	Y	C	15	-	A-132	A-180	A-210
			1.99	III	11900	53000	40	6205	Y	C	15	-	A-132	A-184	A-214
103	23400	2640	0.80	-	3350	14900	40	6175	Y		17	-	A-132	A-180	A-210
			1.02	I	4670	20800	40	6180	Y	A	17	AV	A-132	A-180	A-210
			1.30	II	4670	20800	40	6185	Y	B	17	AV	A-132	A-180	A-210
			1.60	III	6580	29300	40	6195	Y	C	17	-	A-132	A-180	A-210
83.3	28900	3270	1.00	I	5030	22400	40	6180	Y	A	21	AV	A-132	A-180	A-210
			1.30	II	5030	22400	40	6185	Y	B	21	AV	A-132	A-180	A-210
			1.37	II	7070	31500	40	6190	Y	B	21	AV	A-132	A-180	A-210
			1.60	III	7070	31500	40	6195	Y	C	21	AV	A-132	A-180	A-210
			1.97	III	13300	59300	40	6205	Y	C	21	-	A-132	A-184	A-214
70.0	34400	3890	1.00	I	5190	23100	40	6185	Y	A	25	AV	A-132	A-180	A-210
			1.35	II	7390	32900	40	6195	Y	B	25	AV	A-132	A-180	A-210
60.3	39900	4510	0.80	-	5390	24000	40	6185	Y		29	AV	A-132	A-180	A-210
			1.26	I	7750	34500	40	6195	Y	A	29	AV	A-132	A-180	A-210
			1.52	II	14500	64600	40	6205	Y	B	29	-	A-132	A-184	A-214
			1.95	III	14800	65900	40	6215	Y	C	29	-	A-136	A-184	A-214
55.5	43400	4910	1.30	II	8040	35800	406	6190	Y	B	21	AV	A-132	A-180	A-210
			1.60	III	8040	35800	406	6195	Y	C	21	AV	A-132	A-180	A-210
			2.51	III	15300	68200	406	6215	Y	C	21	-	A-136	A-184	A-214
50.0	48100	5440	1.00	I	8150	36300	40	6195	Y	A	35	AV	A-132	A-180	A-210
40.2	60000	6780	1.17	I	8690	38700	406	6195	Y	A	29	-	A-132	A-180	A-210
			1.32	II	16300	72600	406	6205	Y	B	29	-	A-132	A-184	A-214
			1.87	III	16600	74100	406	6215	Y	C	29	-	A-136	A-184	A-214
			2.22	III	17600	78500	406	6225	Y	C	29	-	A-136	A-184	A-214

Notes: [1] Refer to Technical Information Section for R1 and R2 model Overhung Load information.
[2] CNHM, CHHM, CNFM, CHFM, CNVM, CVVM are type designations, see page A-3.
[3] For Inverter Duty, single reduction, see pages A-154~163; double reduction, see pages A-164~175. For Single Phase, see page A-244.
[4] For Single Phase, see page A-245.
[5] For type CVFM, single reduction, see page A-219; double reduction, see page A-240.
[6] Consult factory for frame size 6275DA.

SELECTION TABLES – 60 Hz

40 HP, 30 kW, 60 Hz, 1750 (1165 RPM where noted)

Output Speed	Output Torque		Service Factor		Overhung Load[1]		Selection					Option	Dimension Page[2]		
RPM	in•lb	N•m	SF	AGMA Class	lb	N	HP Symbol	Frame Size	Shaft Spec.	AGMA Class	Ratio	Inverter Duty	CNHM CHHM[3]	CNVM CVVM[4]	CNFM CHFM[5]
40.7	59200	6690	1.00	I	8730	38900	40	6195	Y	A	43	AV	A-132	A-180	A-210
			1.06	I	16300	72600	40	6205	Y	A	43	-	A-132	A-184	A-214
			1.51	II	16600	74100	40	6215	Y	B	43	-	A-136	A-184	A-214
			1.88	III	17600	78600	40	6225	Y	C	43	-	A-136	A-184	A-214
29.7	81200	9180	1.26	I	18000	80300	40	6215	Y	A	59	-	A-136	A-184	A-214
			1.51	II	19100	85200	40	6225	Y	B	59	-	A-136	A-184	A-214
27.1	88500	10000	1.26	I	18700	83100	406	6215	Y	A	43	-	A-136	A-184	A-214
			1.59	II	19800	88300	406	6225	Y	B	43	-	A-136	A-184	A-214
			2.51	III	27600	123000	406	6245	Y	C	43	-	A-136	A-188	A-214
19.7	122000	13800	1.26	I	26700	119000	406	6235	Y	A	59	-	A-136	A-184	A-214
			1.87	III	30100	134000	406	6245	Y	C	59	-	A-136	A-188	A-214
			2.16	III	36800	164000	406	6255	Y	C	59	-	A-136	A-188	A-218
14.5	119000	13500	-	-	23800	106000	40	6225DB	Y		121	-	A-146	A-196	A-232
	157000	17800	1.05	I	29900	133000	40	6235DB	Y	A	121	AV	A-146	A-196	A-236
			1.54	II	40900	182000	40	6255DB	Y	B	121	-	A-150	A-200	A-236
			1.69	III	50100	223000	40	6265DA	Y	C	121	-	A-150	A-200	A-236
13.4	180000	20300	1.07	I	33500	149000	406	6245	Y	A	87	-	A-136	A-188	A-214
			1.43	II	41300	184000	406	6255	Y	B	87	-	A-136	A-188	A-218
			1.78	III	50500	225000	406	6265	Y	C	87	-	A-136	A-188	A-218
10.6	173000	19600	-	-	32100	143000	40	6235DB	Y		165	AV	A-146	A-196	A-236
	215000	24300	1.08	I	35700	159000	40	6245DB	Y	A	165	AV	A-150	A-200	A-236
			1.28	I	43800	195000	40	6255DB	Y	A	165	-	A-150	A-200	A-236
			1.69	III	53700	239000	40	6265DA	Y	C	165	-	A-150	A-200	A-236
8.97	232000	26200	-	-	37500	167000	40	6245DB	Y		195	-	A-150	A-200	A-236
	254000	28700	1.06	I	46000	205000	40	6255DA	Y	A	195	-	A-150	A-200	A-236
			1.52	II	56400	251000	40	6265DA	Y	B	195	-	A-150	A-200	A-236
7.58	228000	25800	-	-	40200	179000	40	6245DB	Y		231	AV	A-150	A-200	A-236
	274000	31000	-	-	48900	218000	40	6255DB	Y		231	-	A-150	A-200	A-236
	301000	34000	1.35	II	59900	267000	40	6265DA	Y	B	231	AV	A-150	A-200	A-236
6.41	274000	31000	-	-	51400	229000	40	6255DB	Y		273	-	A-150	A-200	A-236
	356000	40200	1.14	I	62000	276000	40	6265DA	Y	A	273	AV	A-150	A-200	A-236
5.49	416000	47000	0.98	-	62000	276000	40	6265DA	Y		319	-	A-150	A-200	A-236
			1.45	II	55700	248000	40	6275DA	Y	B	319	-	A-150	A-200	[6]
4.64	407000	46000	-	-	62000	276000	40	6265DA	Y		377	-	A-150	A-200	A-236
	491000	55500	1.23	I	55700	248000	40	6275DA	Y	A	377	-	A-150	A-200	[6]
3.70	617000	69700	0.98	-	55700	248000	40	6275DA	Y		473	-	A-150	A-200	[6]
3.13	603000	68200	-	-	55700	248000	40	6275DA	Y		559	-	A-150	A-200	[6]

Notes: [1] Refer to Technical Information Section for R1 and R2 model Overhung Load information.
[2] CNHM, CHHM, CNFM, CHFM, CNVM, CVVM are type designations, see page A-3.
[3] For Inverter Duty, single reduction, see pages A-154~163; double reduction, see pages A-164~175. For Single Phase, see page A-244.
[4] For Single Phase, see page A-245.
[5] For type CVFM, single reduction, see page A-219; double reduction, see page A-240.
[6] Consult factory for frame size 6275DA.

50 HP, 37 kW, 60 Hz, 1750 (1165 RPM where noted)

Output Speed	Output Torque		Service Factor		Overhung Load[1]		Selection					Option	Dimension Page[2]		
RPM	in•lb	N•m	SF	AGMA Class	lb	N	HP Symbol	Frame Size	Shaft Spec.	AGMA Class	Ratio	Inverter Duty	CNHM CHHM[3]	CNVM CVVM[4]	CNFM CHFM[5]
159	18700	2110	1.05	I	4040	18000	50	6185	Y	A	11	-	A-132	A-180	A-210
			1.30	II	5700	25400	50	6195	Y	B	11	AV	A-132	A-180	A-210
			1.61	III	11100	49300	50	6205	Y	C	11	-	A-132	A-184	A-214
			2.04	III	11200	49900	50	6215	Y	C	11	-	A-136	A-184	A-214
135	22000	2490	1.05	I	4180	18600	50	6185	Y	A	13	-	A-132	A-180	A-210
			1.30	II	5930	26400	50	6195	Y	B	13	AV	A-132	A-180	A-210
117	25500	2880	1.05	I	4380	19500	50	6185	Y	A	15	-	A-132	A-180	A-210
			1.30	II	6220	27700	50	6195	Y	B	15	AV	A-132	A-180	A-210
			1.61	III	11900	52900	50	6205	Y	C	15	-	A-132	A-184	A-214
			2.04	III	12000	53600	50	6215	Y	C	15	-	A-136	A-184	A-214
103	28800	3260	1.05	I	4600	20500	50	6185	Y	A	17	-	A-132	A-180	A-210
			1.30	II	6530	29100	50	6195	Y	B	17	AV	A-132	A-180	A-210
83.3	35700	4030	1.05	I	4960	22100	50	6185	Y	A	21	-	A-132	A-180	A-210
			1.30	II	7030	31300	50	6195	Y	B	21	AV	A-132	A-180	A-210
			1.60	III	13300	59200	50	6205	Y	C	21	-	A-132	A-184	A-214
			2.04	III	13600	60500	50	6215	Y	C	21	-	A-136	A-184	A-214
77.7	38200	4320	1.11	I	7030	31300	506	6190	Y	A	15	AV	A-132	A-180	A-210
			1.30	II	7030	31300	506	6195	Y	B	15	AV	A-132	A-180	A-210
			1.61	III	13400	59500	506	6205	Y	C	15	-	A-132	A-184	A-214
			2.04	III	13500	60300	506	6215	Y	C	15	-	A-136	A-184	A-214
70.0	42500	4800	0.81	-	5100	22700	50	6185	Y		25	-	A-132	A-180	A-210
			1.09	I	7340	32700	50	6195	Y	A	25	AV	A-132	A-180	A-210
60.3	49200	5560	1.02	I	7680	34200	50	6195	Y	A	29	AV	A-132	A-180	A-210
			1.58	II	14800	65700	50	6215	Y	B	29	-	A-136	A-184	A-214
			2.04	III	15600	69600	50	6225	Y	C	29	-	A-136	A-184	A-214
55.5	53500	6050	1.30	II	7970	35500	506	6195	Y	B	21	-	A-132	A-180	A-210
			2.04	III	15300	68000	506	6215	Y	C	21	-	A-136	A-184	A-214
			2.45	III	16100	71800	506	6225	Y	C	21	-	A-136	A-184	A-214
50.0	59400	6710	0.81	-	8060	35900	50	6195	Y		35	AV	A-132	A-180	A-210
40.2	74000	8360	1.07	I	16200	72100	506	6205	Y	A	29	-	A-132	A-184	A-214
			1.51	II	16500	73700	506	6215	Y	B	29	-	A-136	A-184	A-214
			1.80	III	17500	78100	506	6225	Y	C	29	-	A-136	A-184	A-214
			2.04	III	22000	97900	506	6235	Y	C	29	-	A-136	A-184	A-214
40.7	73000	8250	1.22	I	16600	73800	50	6215	Y	A	43	AV	A-136	A-184	A-214
			1.53	II	17600	78300	50	6225	Y	B	43	-	A-136	A-184	A-214
29.7	100000	11300	1.22	I	19000	84700	50	6225	Y	A	59	AV	A-136	A-184	A-214
27.1	110000	12400	1.29	I	19700	87700	506	6225	Y	A	43	-	A-136	A-184	A-214
			1.47	II	24200	108000	506	6235	Y	B	43	AV	A-136	A-184	A-214
			2.04	III	27400	122000	506	6245	Y	C	43	-	A-136	A-188	A-214
19.7	150000	17000	1.02	I	26700	119000	506	6235	Y	A	59	-	A-136	A-184	A-214
			1.52	II	29900	133000	506	6245	Y	B	59	-	A-136	A-188	A-214
			1.75	III	36800	164000	506	6255	Y	C	59	-	A-136	A-188	A-218
			2.55	III	45100	201000	506	6265	Y	C	59	-	A-136	A-188	A-218
14.5	165000	18700	-	-	29900	133000	50	6235DB	Y		121	-	A-146	A-196	A-236
	181000	20500	-	-	33200	148000	50	6245DB	Y		121	-	A-150	A-200	A-236
	195000	22000	1.25	I	40600	181000	50	6255DB	Y	A	121	AV	A-150	A-200	A-236
13.4	222000	25100	1.16	I	41100	183000	506	6255	Y	A	87	-	A-136	A-188	A-218
			1.44	II	50300	224000	506	6265	Y	B	87	-	A-136	A-188	A-218

Notes: [1] Refer to Technical Information Section for R1 and R2 model Overhung Load information.
[2] CNHM, CHHM, CNFM, CHFM, CNVM, CVVM are type designations, see page A-3.
[3] For Inverter Duty, single reduction, see pages A-154~163; double reduction, see pages A-164~175. For Single Phase, see page A-244.
[4] For Single Phase, see page A-245.
[5] For type CVFM, single reduction, see page A-219; double reduction, see page A-240.

SELECTION TABLES – 60 Hz

50 HP, 37 kW, 60 Hz, 1750 (1165 RPM where noted)

Output Speed	Output Torque		Service Factor		Overhung Load[1]		Selection					Option	Dimension Page[2]		
RPM	in•lb	N•m	SF	AGMA Class	lb	N	HP Symbol	Frame Size	Shaft Spec.	AGMA Class	Ratio	Inverter Duty	CNHM CHHM[3]	CNVM CVVM[4]	CNFM CHFM[5]
10.6	232000	26200	-	-	35500	158000	50	6245DB	Y		165	-	A-150	A-200	A-236
	265000	30000	1.04	I	43600	194000	50	6255DB	Y	A	165	AV	A-150	A-200	A-236
			1.37	II	53400	238000	50	6265DA	Y	B	165	-	A-150	A-200	A-236
8.97	276000	31200	-	-	45800	204000	50	6255DB	Y		195	-	A-150	A-200	A-236
	313000	35400	1.23	I	56100	250000	50	6265DA	Y	A	195	AV	A-150	A-200	A-236
7.58	372000	42000	1.10	I	59700	266000	50	6265DA	Y	A	231	AV	A-150	A-200	A-236
6.41	407000	46000	-	-	62000	276000	50	6265DA	Y		273	-	A-150	A-200	A-236
5.49	513000	58000	1.18	I	55700	248000	50	6275DA	Y	A	319	-	A-150	A-200	[6]
4.64	606000	68500	1.00	I	55700	248000	50	6275DA	Y	A	377	-	A-150	A-200	[6]

60 HP, 45 kW, 60 Hz, 1750 (1165 RPM where noted)

Output Speed	Output Torque		Service Factor		Overhung Load[1]		Selection					Option	Dimension Page[2]		
RPM	in•lb	N•m	SF	AGMA Class	lb	N	HP Symbol	Frame Size	Shaft Spec.	AGMA Class	Ratio	Inverter Duty	CNHM CHHM[3]	CNVM CVVM[4]	CNFM CHFM[5]
159	22700	2570	1.07	I	5680	25300	60	6195	Y	A	11	-	A-132	A-180	A-230
			1.33	II	11000	49200	60	6205	Y	B	11	-	A-132	A-184	A-232
			1.67	III	11200	49800	60	6215	Y	C	11	-	A-136	A-184	A-232
			2.21	III	11900	52800	60	6225	Y	C	11	-	A-136	A-184	A-232
135	26800	3030	1.07	I	5880	26200	60	6195	Y	A	13	-	A-132	A-180	A-230
117	31000	3500	1.07	I	6150	27400	60	6195	Y	A	15	-	A-132	A-180	A-230
			1.33	II	11900	52800	60	6205	Y	B	15	-	A-132	A-184	A-232
			1.67	III	12000	53500	60	6215	Y	C	15	-	A-136	A-184	A-232
			2.21	III	12800	57000	60	6225	Y	C	15	-	A-136	A-184	A-232
103	35100	3970	0.87	-	4540	20200	60	6185	Y		17	-	A-132	A-180	A-230
			1.07	I	6490	28900	60	6195	Y	A	17	-	A-132	A-180	A-230
83.3	43400	4900	0.87	-	4870	21700	60	6185	Y		21	-	A-132	A-180	A-230
			1.07	I	6980	31100	60	6195	Y	A	21	-	A-132	A-180	A-230
			1.32	II	13200	59000	60	6205	Y	B	21	-	A-132	A-184	A-232
			1.67	III	13500	60300	60	6215	Y	C	21	-	A-136	A-184	A-232
			2.09	III	14300	63700	60	6225	Y	C	21	-	A-136	A-184	A-232
77.7	46500	5260	1.33	II	13300	59300	606	6205	Y	B	15	-	A-132	A-184	A-232
			1.67	III	13500	60100	606	6215	Y	C	15	-	A-136	A-184	A-232
			2.21	III	14400	64200	606	6225	Y	C	15	-	A-136	A-184	A-232
70.0	51600	5830	0.90	-	7270	32400	60	6195	Y		25	-	A-132	A-180	A-230
60.3	59900	6770	0.84	-	7610	33900	60	6195	Y		29	-	A-132	A-180	A-230
			1.02	I	14400	64100	60	6205	Y	A	29	-	A-132	A-184	A-232
			1.30	II	14700	65400	60	6215	Y	B	29	-	A-136	A-184	A-232
			1.67	III	15600	69300	60	6225	Y	C	29	-	A-136	A-184	A-232
55.5	65100	7360	1.22	I	14900	66200	606	6205	Y	A	21	-	A-132	A-184	A-232
			1.67	III	15200	67700	606	6215	Y	C	21	-	A-136	A-184	A-232
			2.01	III	16100	71500	606	6225	Y	C	21	-	A-136	A-184	A-232
			2.17	III	20100	89500	606	6235	Y	C	21	-	A-136	A-184	A-236
40.2	90200	10200	1.24	I	16400	73200	606	6215	Y	A	29	-	A-136	A-184	A-232
			1.48	II	17200	76500	606	6225	Y	B	29	-	A-136	A-184	A-232
			1.67	III	21900	97500	606	6235	Y	C	29	-	A-136	A-184	A-236
			2.09	III	24500	109000	606	6245	Y	C	29	-	A-136	A-188	A-236
40.7	88500	10000	1.00	I	16500	73300	60	6215	Y	A	43	-	A-136	A-184	A-232

Notes: [1] Refer to Technical Information Section for R1 and R2 model Overhung Load information.
[2] CNHM, CHHM, CNFM, CHFM, CNVM, CVVM are type designations, see page A-3.
[3] For Inverter Duty, single reduction, see pages A-154~163; double reduction, see pages A-164~175. For Single Phase, see page A-244.
[4] For Single Phase, see page A-245.
[5] For type CVFM, single reduction, see page A-219; double reduction, see page A-240.
[6] Consult factory for frame size 6275DA.

60 HP, 45 kW, 60 Hz, 1750 (1165 RPM where noted)

Output Speed	Output Torque		Service Factor		Overhung Load[1]		Selection					Option	Dimension Page[2]		
RPM	in•lb	N•m	SF	AGMA Class	lb	N	HP Symbol	Frame Size	Shaft Spec.	AGMA Class	Ratio	Inverter Duty	CNHM CHHM[3]	CNVM CVVM[4]	CNFM CHFM[5]
27.1	134000	15100	1.21	I	24200	108000	606	6235	Y	A	43	-	A-136	A-184	A-214
			1.67	III	27400	122000	606	6245	Y	C	43	-	A-136	A-188	A-214
			1.98	III	33700	150000	606	6255	Y	C	43	-	A-136	A-188	A-218
			2.51	III	41300	184000	606	6265	Y	C	43	-	A-136	A-188	A-218
19.7	183000	20700	1.25	I	29600	132000	606	6245	Y	A	59	-	A-136	A-188	A-214
			1.44	II	36100	161000	606	6255	Y	B	59	-	A-136	A-188	A-218
			2.09	III	44900	200000	606	6265	Y	C	59	-	A-136	A-188	A-218
14.5	236000	26700	1.03	I	40400	180000	60	6255DB	Y	A	121	-	A-150	A-200	A-236
13.4	270000	30500	1.19	I	50100	223000	606	6265	Y	A	87	-	A-136	A-188	A-218
10.6	323000	36500	1.13	I	53200	237000	60	6265DA	Y	A	165	-	A-150	A-200	A-236
8.97	381000	43100	1.01	I	55700	248000	60	6265DA	Y	A	195	-	A-150	A-200	A-236
7.58	407000	46000	-	-	59500	265000	60	6265DA	Y		231	-	A-150	A-200	A-236
5.49	624000	70500	0.97	-	55700	248000	60	6275DA	Y		319	-	A-150	A-200	[6]

75 HP, 55 kW, 60 Hz, 1750 (1165 RPM where noted)

Output Speed	Output Torque		Service Factor		Overhung Load[1]		Selection					Option	Dimension Page[2]		
RPM	in•lb	N•m	SF	AGMA Class	lb	N	HP Symbol	Frame Size	Shaft Spec.	AGMA Class	Ratio	Inverter Duty	CNHM CHHM[3]	CNVM CVVM[4]	CNFM CHFM[5]
159	27800	3140	1.09	I	11000	49000	75	6205	Y	A	11	-	A-132	A-184	A-214
			1.37	II	11200	49700	75	6215	Y	B	11	-	A-136	A-184	A-214
			1.81	III	11800	52700	75	6225	Y	C	11	-	A-136	A-184	A-214
117	37900	4280	1.09	I	11800	52600	75	6205	Y	A	15	-	A-132	A-184	A-214
			1.37	II	12000	53300	75	6215	Y	B	15	-	A-136	A-184	A-214
			1.81	III	12800	56900	75	6225	Y	C	15	-	A-136	A-184	A-214
83.3	53000	5990	1.08	I	13200	58700	75	6205	Y	A	21	-	A-132	A-184	A-214
			1.37	II	13500	60000	75	6215	Y	B	21	-	A-136	A-184	A-214
			1.71	III	14200	63400	75	6225	Y	C	21	-	A-136	A-184	A-214
60.3	73200	8270	1.06	I	14600	65000	75	6215	Y	A	29	-	A-136	A-184	A-214
			1.37	II	15500	69000	75	6225	Y	B	29	-	A-136	A-184	A-214
55.5	79500	8990	1.77	III	20000	89200	756	6235	Y	C	21	-	A-136	A-184	A-214
40.2	110000	12400	1.37	II	21600	96000	756	6235	Y	B	29	-	A-136	A-184	A-214
			1.71	III	24200	108000	756	6245	Y	C	29	-	A-136	A-188	A-214
			2.15	III	30100	134000	756	6255	Y	C	29	-	A-136	A-188	A-218
40.7	109000	12300	1.03	I	17400	77300	75	6225	Y	A	43	-	A-136	A-184	A-214
27.1	163000	18400	0.99	-	24200	108000	756	6235	Y		43	-	A-136	A-184	A-214
			1.37	II	27200	121000	756	6245	Y	B	43	-	A-136	A-188	A-214
			1.62	III	33500	149000	756	6255	Y	C	43	-	A-136	A-188	A-218
			2.05	III	41100	183000	756	6265	Y	C	43	-	A-136	A-188	A-218
19.7	224000	25300	1.18	I	36400	162000	756	6255	Y	A	59	-	A-136	A-188	A-218
			1.71	III	44700	199000	756	6265	Y	C	59	-	A-136	A-188	A-218

Notes: [1] Refer to Technical Information Section for R1 and R2 model Overhung Load information.
[2] CNHM, CHHM, CNFM, CHFM, CNVM, CVVM are type designations, see page A-3.
[3] For Inverter Duty, single reduction, see pages A-154~163; double reduction, see pages A-164~175. For Single Phase, see page A-244.
[4] For Single Phase, see page A-245.
[5] For type CVFM, single reduction, see page A-219; double reduction, see page A-240.
[6] Consult factory for frame size 6275DA.

SELECTION TABLES – 50 Hz

1/8 HP, 0.1 kW, 50 Hz[3], 1450 RPM

Output Speed	Output Torque		Service Factor		Overhung Load[1]		Selection					Dimension Page[2]		
RPM	in•lb	N•m	SF	AGMA Class	lb	N	HP Symbol	Frame Size	Shaft Spec.	AGMA Class	Ratio	CNHM CHHM[4]	CNVM CVVM[4]	CNFM CHFM[5]
242	33.2	3.75	2.00	III	181	804	01	6060	Y	C	6	A-122	A-176	A-204
181	44.3	5.01	2.00	III	207	921	01	6060	Y	C	8	A-122	A-176	A-204
132	60.9	6.88	2.00	III	265	1180	01	6060	Y	C	11	A-122	A-176	A-204
112	71.9	8.13	2.00	III	265	1180	01	6060	Y	C	13	A-122	A-176	A-204
96.7	83.1	9.39	2.00	III	265	1180	01	6060	Y	C	15	A-122	A-176	A-204
85.3	93.8	10.6	2.00	III	265	1180	01	6060	Y	C	17	A-122	A-176	A-204
69.0	116	13.1	1.83	III	265	1180	01	6060	Y	C	21	A-122	A-176	A-204
58.0	138	15.6	1.10	I	265	1180	01	6060	Y	A	25	A-122	A-176	A-204
			1.66	III	265	1180	01	6065	Y	C	25	A-122	A-176	A-204
			2.30	III	397	1770	01	6070	Y	C	25	A-122	A-176	A-204
50.0	160	18.1	1.10	I	265	1180	01	6060	Y	A	29	A-122	A-176	A-204
			1.65	III	265	1180	01	6065	Y	C	29	A-122	A-176	A-204
			2.26	III	397	1770	01	6070	Y	C	29	A-122	A-176	A-204
41.4	194	21.9	1.10	I	265	1180	01	6060	Y	A	35	A-122	A-176	A-204
			1.37	II	265	1180	01	6065	Y	B-	35	A-122	A-176	A-204
			2.05	III	397	1770	01	6070	Y	C	35	A-122	A-176	A-204
33.7	238	26.9	1.12	I	265	1180	01	6065	Y	A	43	A-122	A-176	A-204
			1.67	III	397	1770	01	6070	Y	C	43	A-122	A-176	A-204
			2.23	III	397	1770	01	6075	Y	C	43	A-122	A-176	A-204
28.4	282	31.9	1.00	I	397	1770	01	6070	Y	A	51	A-122	A-176	A-204
			1.43	II	397	1770	01	6075	Y	B	51	A-122	A-176	A-204
			1.92	III	575	2560	01	6080	Y	C	51	A-122	A-176	A-204
24.6	326	36.9	1.00	I	397	1770	01	6070	Y	A	59	A-122	A-176	A-204
			1.36	II	397	1770	01	6075	Y	B	59	A-122	A-176	A-204
			1.85	III	575	2560	01	6080	Y	C	59	A-122	A-176	A-204
20.4	393	44.4	1.20	I	575	2560	01	6080	Y	A	71	A-122	A-176	A-204
			1.65	III	575	2560	01	6085	Y	C	71	A-122	A-176	A-204
			2.52	III	750	3340	01	6090	Y	C	71	A-122	A-176	A-204
16.7	481	54.4	1.21	I	575	2560	01	6085	Y	A	87	A-122	A-176	A-204
			2.11	III	750	3340	01	6090	Y	C	87	A-122	A-176	A-204
13.9	212	24.0	-	-	265	1180	01	6060DA	Y		104	A-140	A-190	A-224
	265	30.0	-	-	265	1180	01	6065DA	Y		104	A-140	A-190	A-224
	398	45.0	-	-	397	1770	01	6070DA	Y		104	A-140	A-190	A-224
	545	61.6	0.97	-	397	1770	01	6075DA	Y		104	A-140	A-190	A-224
			2.43	III	750	3340	01	6090DA	Y	C	104	A-140	A-190	A-224
12.2	659	74.5	1.25	I	750	3340	01	6090	Y	A	119	A-122	A-176	A-204
			1.45	II	750	3340	01	6095	Y	B	119	A-122	A-176	A-204
12.0	212	24.0	-	-	265	1180	01	6060DA	Y		121	A-140	A-190	A-224
	265	30.0	-	-	256	1140	01	6065DA	Y		121	A-140	A-190	A-224
	398	45.0	-	-	397	1770	01	6070DA	Y		121	A-140	A-190	A-224
	449	50.8	-	-	397	1770	01	6075DA	Y		121	A-140	A-190	A-224
	634	71.7	2.09	III	750	3340	01	6090DA	Y	C	121	A-140	A-190	A-224
10.1	212	24.0	-	-	265	1180	01	6060DA	Y		143	A-140	A-190	A-224
	265	30.0	-	-	265	1180	01	6065DA	Y		143	A-140	A-190	A-224
	398	45.0	-	-	397	1770	01	6070DA	Y		143	A-140	A-190	A-224
	531	60.0	-	-	397	1770	01	6075DA	Y		143	A-140	A-190	A-224
	750	84.8	1.77	III	750	3340	01	6090DA	Y	C	143	A-140	A-190	A-224

Notes: [1] Refer to Technical Information Section for R1 and R2 Model Overhung Load information.
[2] CNHM, CHHM, CNFM, CHFM, CNVM, CVVM are type designations, see page A-3.
[3] Refer to 60 Hz Selection Tables for inverter duty (AV) selections.
[4] For single phase dimensions, type CNHM, see page A-244; type CNVM, see page A-245.
[5] For type CVFM, single reduction, see page A-219; double reduction, see page A-240.

1/8 HP, 0.1 kW, 50 Hz[3], 1450 RPM

Output Speed	Output Torque		Service Factor		Overhung Load[1]		Selection					Dimension Page[2]		
RPM	in•lb	N•m	SF	AGMA Class	lb	N	HP Symbol	Frame Size	Shaft Spec.	AGMA Class	Ratio	CNHM CHHM[4]	CNVM CVVM[4]	CNFM CHFM[5]
8.79	212	24.0	-	-	265	1180	01	6060DA	Y		165	A-140	A-190	A-224
	265	30.0	-	-	265	1180	01	6065DA	Y		165	A-140	A-190	A-224
	398	45.0	-	-	397	1770	01	6070DA	Y		165	A-140	A-190	A-224
	531	60.0	-	-	397	1770	01	6075DA	Y		165	A-140	A-190	A-224
	865	97.8	1.53	II	750	3340	01	6090DA	Y	B	165	A-140	A-190	A-224
			2.04	III	750	3340	01	6095DA	Y	C	165	A-140	A-190	A-224
7.44	212	24.0	-	-	265	1180	01	6060DA	Y		195	A-140	A-190	A-224
	265	30.0	-	-	265	1180	01	6065DA	Y		195	A-140	A-190	A-224
	398	45.0	-	-	397	1770	01	6070DA	Y		195	A-140	A-190	A-224
	531	60.0	-	-	397	1770	01	6075DA	Y		195	A-140	A-190	A-224
	1030	116	1.30	II	750	3340	01	6090DA	Y	B	195	A-140	A-190	A-224
			1.73	III	750	3340	01	6095DA	Y	C	195	A-140	A-190	A-224
			2.16	III	1210	5400	01	6100DA	Y	C	195	A-140	A-190	A-224
6.28	212	24.0	-	-	265	1180	01	6060DA	Y		231	A-140	A-190	A-224
	265	30.0	-	-	265	1180	01	6065DA	Y		231	A-140	A-190	A-224
	398	45.0	-	-	397	1770	01	6070DA	Y		231	A-140	A-190	A-224
	531	60.0	-	-	397	1770	01	6075DA	Y		231	A-140	A-190	A-224
	1210	137	1.10	I	750	3340	01	6090DA	Y	A	231	A-140	A-190	A-224
			1.46	II	750	3340	01	6095DA	Y	B	231	A-140	A-190	A-224
			1.83	III	1210	5400	01	6100DA	Y	C	231	A-140	A-190	A-224
5.31	212	24.0	-	-	265	1180	01	6060DA	Y		273	A-140	A-190	A-224
	265	30.0	-	-	265	1180	01	6065DA	Y		273	A-140	A-190	A-224
	398	45.0	-	-	397	1770	01	6070DA	Y		273	A-140	A-190	A-224
	531	60.0	-	-	397	1770	01	6075DA	Y		273	A-140	A-190	A-224
	1430	162	1.24	I	750	3340	01	6095DA	Y	A	273	A-140	A-190	A-224
			1.54	II	1210	5400	01	6100DA	Y	B	273	A-140	A-190	A-224
			1.85	III	1210	5400	01	6105DA	Y	C	273	A-140	A-190	A-224
4.55	212	24.0	-	-	265	1180	01	6060DA	Y		319	A-140	A-190	A-224
	265	30.0	-	-	265	1180	01	6065DA	Y		319	A-140	A-190	A-224
	398	45.0	-	-	397	1770	01	6070DA	Y		319	A-140	A-190	A-224
	531	60.0	-	-	397	1770	01	6075DA	Y		319	A-140	A-190	A-224
	1330	150	-	-	739	3290	01	6090DA	Y		319	A-140	A-190	A-224
	1670	189	1.06	I	723	3220	01	6095DA	Y	A	319	A-140	A-190	A-224
			1.59	II	1210	5400	01	6105DA	Y	B	319	A-140	A-190	A-224
			2.75	III	2200	9810	01	6120DB	Y	C	319	A-140	A-190	A-224
3.85	212	24.0	-	-	265	1180	01	6060DA	Y		377	A-140	A-190	A-224
	265	30.0	-	-	265	1180	01	6065DA	Y		377	A-140	A-190	A-224
	398	45.0	-	-	397	1770	01	6070DA	Y		377	A-140	A-190	A-224
	531	60.0	-	-	397	1770	01	6075DA	Y		377	A-140	A-190	A-224
	1330	150	-	-	739	3290	01	6090DA	Y		377	A-140	A-190	A-224
	1970	223	0.89	-	707	3150	01	6095DA	Y		377	A-140	A-190	A-224
			1.12	I	1210	5400	01	6100DA	Y	A	377	A-140	A-190	A-224
			1.34	II	1210	5400	01	6105DA	Y	B	377	A-140	A-190	A-224
			2.33	III	2200	9810	01	6120DB	Y	C	377	A-140	A-190	A-224

Notes: [1] Refer to Technical Information Section for R1 and R2 Model Overhung Load information.
[2] CNHM, CHHM, CNFM, CHFM, CNVM, CVVM are type designations, see page A-3.
[3] Refer to 60 Hz Selection Tables for inverter duty (AV) selections.
[4] For single phase dimensions, type CNHM, see page A-244; type CNVM, see page A-245.
[5] For type CVFM, single reduction, see page A-219; double reduction, see page A-240.

SELECTION TABLES – 50 Hz

1/8 HP, 0.1 kW, 50 Hz[3], 1450 RPM

Output Speed	Output Torque		Service Factor		Overhung Load[1]		Selection					Dimension Page[2]		
RPM	in•lb	N•m	SF	AGMA Class	lb	N	HP Symbol	Frame Size	Shaft Spec.	AGMA Class	Ratio	CNHM CHHM[4]	CNVM CVVM[4]	CNFM CHFM[5]
3.07	212	24.0	-	-	265	1180	01	6060DA	Y		473	A-140	A-190	A-224
	265	30.0	-	-	265	1180	01	6065DA	Y		473	A-140	A-190	A-224
	398	45.0	-	-	397	1770	01	6070DA	Y		473	A-140	A-190	A-224
	531	60.0	-	-	373	1660	01	6075DA	Y		473	A-140	A-190	A-224
	1330	150	-	-	743	3310	01	6090DA	Y		473	A-140	A-190	A-224
	1770	200	-	-	723	3220	01	6095DA	Y		473	A-140	A-190	A-224
	2480	280	1.07	I	1210	5400	01	6105DA	Y	A	473	A-140	A-190	A-224
			1.87	III	2200	9810	01	6120DB	Y	C	473	A-140	A-190	A-224
2.59	212	24.0	-	-	265	1180	01	6060DA	Y		559	A-140	A-190	A-224
	265	30.0	-	-	265	1180	01	6065DA	Y		559	A-140	A-190	A-224
	398	45.0	-	-	397	1770	01	6070DA	Y		559	A-140	A-190	A-224
	531	60.0	-	-	373	1660	01	6075DA	Y		559	A-140	A-190	A-224
	1330	150	-	-	743	3310	01	6090DA	Y		559	A-140	A-190	A-224
	1770	200	-	-	723	3220	01	6095DA	Y		559	A-140	A-190	A-224
	2210	250	-	-	1210	5400	01	6100DA	Y		559	A-140	A-190	A-224
	2930	331	0.91	-	983	4380	01	6105DA	Y		559	A-140	A-190	A-224
			1.58	II	2200	9810	01	6120DB	Y	B	559	A-140	A-190	A-224
			1.90	III	2200	9810	01	6125DB	Y	C	559	A-140	A-190	A-224
2.23	398	45.0	-	-	397	1770	01	6070DA	Y		649	A-140	A-190	A-224
	508	57.4	-	-	355	1580	01	6075DA	Y		649	A-140	A-190	A-224
	1290	146	-	-	741	3300	01	6090DA	Y		649	A-140	A-190	A-224
	2210	250	-	-	1210	5400	01	6100DA	Y		649	A-140	A-190	A-224
	2620	296	-	-	1140	5090	01	6105DA	Y		649	A-140	A-190	A-224
	3410	385	1.36	II	2200	9810	01	6120DB	Y	B	649	A-140	A-190	A-224
			1.64	III	2200	9810	01	6125DB	Y	C	649	A-140	A-190	A-224
1.98	212	24.0	-	-	265	1180	01	6060DA	Y		731	A-140	A-190	A-224
	265	30.0	-	-	265	1180	01	6065DA	Y		731	A-140	A-190	A-224
	398	45.0	-	-	397	1770	01	6070DA	Y		731	A-140	A-190	A-224
	531	60.0	-	-	373	1660	01	6075DA	Y		731	A-140	A-190	A-224
	1330	150	-	-	743	3310	01	6090DA	Y		731	A-140	A-190	A-224
	1770	200	-	-	723	3220	01	6095DA	Y		731	A-140	A-190	A-224
	2210	250	-	-	1210	5400	01	6100DA	Y		731	A-140	A-190	A-224
	2650	300	-	-	1210	5400	01	6105DA	Y		731	A-140	A-190	A-224
	3830	433	1.21	I	2200	9810	01	6120DB	Y	A	731	A-140	A-190	A-224
			1.45	II	2200	9810	01	6125DB	Y	B	731	A-140	A-190	A-224
1.72	212	24.0	-	-	265	1180	01	6060DA	Y		841	A-140	A-190	A-224
	265	30.0	-	-	265	1180	01	6065DA	Y		841	A-140	A-190	A-224
	398	45.0	-	-	397	1770	01	6070DA	Y		841	A-140	A-190	A-224
	531	60.0	-	-	397	1770	01	6075DA	Y		841	A-140	A-190	A-224
	1330	150	-	-	739	3290	01	6090DA	Y		841	A-140	A-190	A-224
	1770	200	-	-	718	3200	01	6095DA	Y		841	A-140	A-190	A-224
	2210	250	-	-	1210	5400	01	6100DA	Y		841	A-140	A-190	A-224
	2650	300	-	-	1210	5400	01	6105DA	Y		841	A-140	A-190	A-224
	4420	499	1.26	I	2200	9810	01	6125DB	Y	A	841	A-140	A-190	A-224

Notes: [1] Refer to Technical Information Section for R1 and R2 Model Overhung Load information.
[2] CNHM, CHHM, CNFM, CHFM, CNVM, CVVM are type designations, see page A-3.
[3] Refer to 60 Hz Selection Tables for inverter duty (AV) selections.
[4] For single phase dimensions, type CNHM, see page A-244; type CNVM, see page A-245.
[5] For type CVFM, single reduction, see page A-219; double reduction, see page A-240.

1/8 HP, 0.1 kW, 50 Hz[3], 1450 RPM

Output Speed	Output Torque		Service Factor		Overhung Load[1]		Selection					Dimension Page[2]		
RPM	in•lb	N•m	SF	AGMA Class	lb	N	HP Symbol	Frame Size	Shaft Spec.	AGMA Class	Ratio	CNHM CHHM[4]	CNVM CVVM[4]	CNFM CHFM[5]
1.45	398	45.0	-	-	397	1770	01	6070DA	Y		1003	A-140	A-190	A-224
	508	57.4	-	-	355	1580	01	6075DA	Y		1003	A-140	A-190	A-224
	1290	146	-	-	741	3300	01	6090DA	Y		1003	A-140	A-190	A-224
	2210	250	-	-	1210	5400	01	6100DA	Y		1003	A-140	A-190	A-224
	2620	296	-	-	1140	5090	01	6105DA	Y		1003	A-140	A-190	A-224
	5260	595	1.06	I	2200	9810	01	6125DB	Y	A	1003	A-140	A-190	A-224
1.16	212	24.0	-	-	265	1180	01	6060DA	Y		1247	A-140	A-190	A-224
	265	30.0	-	-	265	1180	01	6065DA	Y		1247	A-140	A-190	A-224
	398	45.0	-	-	397	1770	01	6070DA	Y		1247	A-140	A-190	A-224
	531	60.0	-	-	373	1660	01	6075DA	Y		1247	A-140	A-190	A-224
	1330	150	-	-	743	3310	01	6090DA	Y		1247	A-140	A-190	A-224
	1770	200	-	-	723	3220	01	6095DA	Y		1247	A-140	A-190	A-224
	2210	250	-	-	1210	5400	01	6100DA	Y		1247	A-140	A-190	A-224
	2650	300	-	-	1210	5400	01	6105DA	Y		1247	A-140	A-190	A-224
	4650	525	-	-	2200	9810	01	6120DB	Y		1247	A-140	A-190	A-224
	5570	630	0.85	-	2200	9810	01	6125DB	Y		1247	A-140	A-190	A-224
0.980	1330	150	-	-	743	3310	01	6090DA	Y		1479	A-140	A-190	A-224
	1710	193	-	-	727	3240	01	6095DA	Y		1479	A-140	A-190	A-224
	2210	250	-	-	1210	5400	01	6100DA	Y		1479	A-140	A-190	A-224
	2650	300	-	-	1070	4780	01	6105DA	Y		1479	A-140	A-190	A-224
	4650	525	-	-	2200	9780	01	6120DB	Y		1479	A-140	A-190	A-224
	5570	630	-	-	2150	9560	01	6125DB	Y		1479	A-140	A-190	A-224
0.784	212	24.0	-	-	265	1180	01	6060DA	Y		1849	A-140	A-190	A-224
	265	30.0	-	-	265	1180	01	6065DA	Y		1849	A-140	A-190	A-224
	398	45.0	-	-	397	1770	01	6070DA	Y		1849	A-140	A-190	A-224
	531	60.0	-	-	373	1660	01	6075DA	Y		1849	A-140	A-190	A-224
	1330	150	-	-	743	3310	01	6090DA	Y		1849	A-140	A-190	A-224
	1770	200	-	-	723	3220	01	6095DA	Y		1849	A-140	A-190	A-224
	2210	250	-	-	1210	5400	01	6100DA	Y		1849	A-140	A-190	A-224
	2650	300	-	-	1210	5400	01	6105DA	Y		1849	A-140	A-190	A-224
	4650	525	-	-	2200	9810	01	6120DB	Y		1849	A-140	A-190	A-224
	5570	630	-	-	2200	9810	01	6125DB	Y		1849	A-140	A-190	A-224
0.702	398	45.0	-	-	397	1770	01	6070DA	Y		2065	A-140	A-190	A-224
	508	57.4	-	-	355	1580	01	6075DA	Y		2065	A-140	A-190	A-224
	1290	146	-	-	741	3300	01	6090DA	Y		2065	A-140	A-190	A-224
	2210	250	-	-	1210	5400	01	6100DA	Y		2065	A-140	A-190	A-224
	2620	296	-	-	1140	5090	01	6105DA	Y		2065	A-140	A-190	A-224
	4650	525	-	-	2200	9810	01	6120DB	Y		2065	A-140	A-190	A-224
	5570	630	-	-	2200	9810	01	6125DB	Y		2065	A-140	A-190	A-224
0.572	398	45.0	-	-	397	1770	01	6070DA	Y		2537	A-140	A-190	A-224
	508	57.4	-	-	355	1580	01	6075DA	Y		2537	A-140	A-190	A-224
	1290	146	-	-	741	3300	01	6090DA	Y		2537	A-140	A-190	A-224
	2210	250	-	-	1210	5400	01	6100DA	Y		2537	A-140	A-190	A-224
	2620	296	-	-	1140	5090	01	6105DA	Y		2537	A-140	A-190	A-224
	4650	525	-	-	2200	9810	01	6120DB	Y		2537	A-140	A-190	A-224
	5570	630	-	-	2200	9810	01	6125DB	Y		2537	A-140	A-190	A-224

Notes: [1] Refer to Technical Information Section for R1 and R2 Model Overhung Load information.
[2] CNHM, CHHM, CNFM, CHFM, CNVM, CVVM are type designations, see page A-3.
[3] Refer to 60 Hz Selection Tables for inverter duty (AV) selections.
[4] For single phase dimensions, type CNHM, see page A-244; type CNVM, see page A-245.
[5] For type CVFM, single reduction, see page A-219; double reduction, see page A-240.

SELECTION TABLES – 50 Hz

1/8 HP, 0.1 kW, 50 Hz[3], 1450 RPM

Output Speed	Output Torque		Service Factor		Overhung Load[1]		Selection					Dimension Page[2]		
RPM	in•lb	N•m	SF	AGMA Class	lb	N	HP Symbol	Frame Size	Shaft Spec.	AGMA Class	Ratio	CNHM CHHM[4]	CNVM CVVM[4]	CNFM CHFM[5]
0.476	1330	150	-	-	743	3310	01	6090DA	Y		3045	A-140	A-190	A-224
	1700	192	-	-	727	3240	01	6095DA	Y		3045	A-140	A-190	A-224
	2210	250	-	-	1210	5400	01	6100DA	Y		3045	A-140	A-190	A-224
	2650	300	-	-	1070	4780	01	6105DA	Y		3045	A-140	A-190	A-224
	4650	525	-	-	2200	9780	01	6120DB	Y		3045	A-140	A-190	A-224
	5570	630	-	-	2150	9560	01	6125DB	Y		3045	A-140	A-190	A-224
0.417	1290	146	-	-	741	3300	01	6090DA	Y		3481	A-140	A-190	A-224
	2210	250	-	-	1210	5400	01	6100DA	Y		3481	A-140	A-190	A-224
	2620	296	-	-	1140	5090	01	6105DA	Y		3481	A-140	A-190	A-224
	4650	525	-	-	2200	9810	01	6120DB	Y		3481	A-140	A-190	A-224
	5570	630	-	-	2200	9810	01	6125DB	Y		3481	A-140	A-190	A-224
0.327	1330	150	-	-	743	3310	01	6090DA	Y		4437	A-140	A-190	A-224
	1700	192	-	-	727	3240	01	6095DA	Y		4437	A-140	A-190	A-224
	2210	250	-	-	1210	5400	01	6100DA	Y		4437	A-140	A-190	A-224
	2650	300	-	-	1070	4780	01	6105DA	Y		4437	A-140	A-190	A-224
	4650	525	-	-	2200	9780	01	6120DB	Y		4437	A-140	A-190	A-224
	5570	630	-	-	2150	9560	01	6125DB	Y		4437	A-140	A-190	A-224
0.282	1330	150	-	-	743	3310	01	6090DA	Y		5133	A-140	A-190	A-224
	1700	192	-	-	727	3240	01	6095DA	Y		5133	A-140	A-190	A-224
	2210	250	-	-	1210	5400	01	6100DA	Y		5133	A-140	A-190	A-224
	2650	300	-	-	1070	4780	01	6105DA	Y		5133	A-140	A-190	A-224
	4650	525	-	-	2200	9780	01	6120DB	Y		5133	A-140	A-190	A-224
	5570	630	-	-	2150	9560	01	6125DB	Y		5133	A-140	A-190	A-224
0.235	4650	525	-	-	2200	9780	01	6120DB	Y		6177	A-140	A-190	A-224
	5570	630	-	-	2150	9560	01	6125DB	Y		6177	A-140	A-190	A-224
0.192	4650	525	-	-	2200	9780	01	6120DB	Y		7569	A-140	A-190	A-224
	5570	630	-	-	2150	9560	01	6125DB	Y		7569	A-140	A-190	A-224

1/4 HP, 0.2 kW, 50 Hz[3], 1450 RPM

Output Speed	Output Torque		Service Factor		Overhung Load[1]		Selection					Dimension Page[2]		
RPM	in•lb	N•m	SF	AGMA Class	lb	N	HP Symbol	Frame Size	Shaft Spec.	AGMA Class	Ratio	CNHM CHHM[4]	CNVM CVVM[4]	CNFM CHFM[5]
242	66.4	7.51	1.00	I	179	798	02	6060	Y	A	6	A-122	A-176	A-204
			1.43	II	179	798	02	6065	Y	B	6	A-122	A-176	A-204
			1.74	III	312	1390	02	6070	Y	C	6	A-122	A-176	A-204
			2.04	III	312	1390	02	6075	Y	C	6	A-122	A-176	A-204
181	88.5	10.0	1.00	I	205	912	02	6060	Y	A	8	A-122	A-176	A-204
			1.43	II	205	912	02	6065	Y	B	8	A-122	A-176	A-204
			1.74	III	346	1540	02	6070	Y	C	8	A-122	A-176	A-204
			2.04	III	346	1540	02	6075	Y	C	8	A-122	A-176	A-204
132	122	13.8	1.00	I	265	1180	02	6060	Y	A	11	A-122	A-176	A-204
			1.43	II	265	1180	02	6065	Y	B	11	A-122	A-176	A-204
			1.74	III	388	1730	02	6070	Y	C	11	A-122	A-176	A-204
			2.04	III	388	1730	02	6075	Y	C	11	A-122	A-176	A-204
112	144	16.3	1.00	I	265	1180	02	6060	Y	A	13	A-122	A-176	A-204
			1.43	II	265	1180	02	6065	Y	B	13	A-122	A-176	A-204
			1.74	III	397	1770	02	6070	Y	C	13	A-122	A-176	A-204
			2.04	III	397	1770	02	6075	Y	C	13	A-122	A-176	A-204

Notes: [1] Refer to Technical Information Section for R1 and R2 Model Overhung Load information.
[2] CNHM, CHHM, CNFM, CHFM, CNVM, CVVM are type designations, see page A-3.
[3] Refer to 60 Hz Selection Tables for inverter duty (AV) selections.
[4] For single phase dimensions, type CNHM, see page A-244; type CNVM, see page A-245.
[5] For type CVFM, single reduction, see page A-219; double reduction, see page A-240.

1/4 HP, 0.2 kW, 50 Hz[3], 1450 RPM

Output Speed	Output Torque		Service Factor		Overhung Load[1]		Selection					Dimension Page[2]		
RPM	in•lb	N•m	SF	AGMA Class	lb	N	HP Symbol	Frame Size	Shaft Spec.	AGMA Class	Ratio	CNHM CHHM[4]	CNVM CVVM[4]	CNFM CHFM[5]
96.7	166	18.8	1.00	I	265	1180	02	6060	Y	A	15	A-122	A-176	A-204
			1.43	II	265	1180	02	6065	Y	B	15	A-122	A-176	A-204
			1.74	III	397	1770	02	6070	Y	C	15	A-122	A-176	A-204
			2.04	III	397	1770	02	6075	Y	C	15	A-122	A-176	A-204
85.3	188	21.3	1.00	I	265	1180	02	6060	Y	A	17	A-122	A-176	A-204
			1.41	II	265	1180	02	6065	Y	B	17	A-122	A-176	A-204
			1.74	III	397	1770	02	6070	Y	C	17	A-122	A-176	A-204
			2.04	III	397	1770	02	6075	Y	C	17	A-122	A-176	A-204
69.0	233	26.3	1.14	I	265	1180	02	6065	Y	A	21	A-122	A-176	A-204
			1.60	III	397	1770	02	6070	Y	C	21	A-122	A-176	A-204
			2.04	III	397	1770	02	6075	Y	C	21	A-122	A-176	A-204
58.0	277	31.3	0.83	-	265	1180	02	6065	Y		25	A-122	A-176	A-204
			1.15	I	397	1770	02	6070	Y	A	25	A-122	A-176	A-204
			1.47	II	397	1770	02	6075	Y	B	25	A-122	A-176	A-204
			1.70	III	575	2560	02	6080	Y	C	25	A-122	A-176	A-204
			2.38	III	575	2560	02	6085	Y	C	25	A-122	A-176	A-204
50.0	321	36.3	0.83	-	265	1180	02	6065	Y		29	A-122	A-176	A-204
			1.13	I	397	1770	02	6070	Y	A	29	A-122	A-176	A-204
			1.43	II	397	1770	02	6075	Y	B	29	A-122	A-176	A-204
			1.70	III	575	2560	02	6080	Y	C	29	A-122	A-176	A-204
			2.34	III	575	2560	02	6085	Y	C	29	A-122	A-176	A-204
41.4	388	43.8	1.03	I	397	1770	02	6070	Y	A	35	A-122	A-176	A-204
			1.36	II	397	1770	02	6075	Y	B	35	A-122	A-176	A-204
			1.45	II	575	2560	02	6080	Y	B	35	A-122	A-176	A-204
			1.64	III	575	2560	02	6085	Y	C	35	A-122	A-176	A-204
			3.06	III	750	3340	02	6090	Y	C	35	A-122	A-176	A-204
33.7	476	53.8	1.12	I	397	1770	02	6075	Y	A	43	A-122	A-176	A-204
			1.47	II	575	2560	02	6085	Y	B	43	A-122	A-176	A-204
			2.18	III	750	3340	02	6090	Y	C	43	A-122	A-176	A-204
28.4	565	63.8	1.21	I	575	2560	02	6085	Y	A	51	A-122	A-176	A-204
			1.66	III	750	3340	02	6090	Y	C	51	A-122	A-176	A-204
			2.04	III	750	3340	02	6095	Y	C	51	A-122	A-176	A-204
24.6	653	73.8	1.17	I	575	2560	02	6085	Y	A	59	A-122	A-176	A-204
			1.55	II	750	3340	02	6090	Y	B	59	A-122	A-176	A-204
			1.68	III	750	3340	02	6095	Y	C	59	A-122	A-176	A-204
			2.58	III	1210	5400	02	6100	Y	C	59	A-122	A-176	A-204
20.4	786	88.8	0.83	-	534	2380	02	6085	Y		71	A-122	A-176	A-204
			1.26	I	750	3340	02	6090	Y	A	71	A-122	A-176	A-204
			1.39	II	750	3340	02	6095	Y	B	71	A-122	A-176	A-204
			2.18	III	1210	5400	02	6100	Y	C	71	A-122	A-176	A-204
16.7	964	109	1.06	I	750	3340	02	6090	Y	A	87	A-122	A-176	A-204
			1.32	II	750	3340	02	6095	Y	B	87	A-122	A-176	A-204
			2.17	III	1210	5400	02	6100	Y	C	87	A-122	A-176	A-204
13.9	531	60.0	-	-	397	1770	02	6075DA	Y		104	A-140	A-190	A-224
	1090	123	1.22	I	750	3340	02	6090DA	Y	A	104	A-140	A-190	A-224
			1.47	II	750	3340	02	6095DA	Y	B	104	A-140	A-190	A-224
			2.03	III	1210	5400	02	6100DA	Y	C	104	A-140	A-190	A-224

Notes: [1] Refer to Technical Information Section for R1 and R2 Model Overhung Load information.
[2] CNHM, CHHM, CNFM, CHFM, CNVM, CVVM are type designations, see page A-3.
[3] Refer to 60 Hz Selection Tables for inverter duty (AV) selections.
[4] For single phase dimensions, type CNHM, see page A-244; type CNVM, see page A-245.
[5] For type CVFM, single reduction, see page A-219; double reduction, see page A-240.

SELECTION TABLES – 50 Hz

1/4 HP, 0.2 kW, 50 Hz[3], 1450 RPM

Output Speed	Output Torque		Service Factor		Overhung Load[1]		Selection					Dimension Page[2]		
RPM	in•lb	N•m	SF	AGMA Class	lb	N	HP Symbol	Frame Size	Shaft Spec.	AGMA Class	Ratio	CNHM CHHM[4]	CNVM CVVM[4]	CNFM CHFM[5]
12.2	1320	149	1.05	I	1210	5400	02	6100	Y	A	119	A-122	A-176	A-204
			1.43	II	1210	5400	02	6105	Y	B	119	A-122	A-176	A-204
12.0	1270	143	1.12	I	750	3340	02	6095DA	Y	A	121	A-140	A-190	A-224
			1.74	III	1210	5400	02	6100DA	Y	C	121	A-140	A-190	A-224
			2.14	III	1210	5400	02	6105DA	Y	C	121	A-140	A-190	A-224
10.1	1500	170	1.08	I	750	3340	02	6095DA	Y	A	143	A-140	A-190	A-224
			1.47	II	1210	5400	02	6100DA	Y	B	143	A-140	A-190	A-224
			1.77	III	1210	5400	02	6105DA	Y	C	143	A-140	A-190	A-224
8.79	1330	150	-	-	750	3340	02	6090DA	Y		165	A-140	A-190	A-224
	1730	196	1.02	I	750	3340	02	6095DA	Y	A	165	A-140	A-190	A-224
			1.53	II	1210	5400	02	6105DA	Y	B	165	A-140	A-190	A-224
			2.68	III	2200	9810	02	6120DB	Y	C	165	A-140	A-190	A-224
7.44	1330	150	-	-	750	3340	02	6090DA	Y		195	A-140	A-190	A-224
	2040	231	0.87	-	750	3340	02	6095DA	Y		195	A-140	A-190	A-224
			1.08	I	1210	5400	02	6100DA	Y	A	195	A-140	A-190	A-224
			1.30	II	1210	5400	02	6105DA	Y	B	195	A-140	A-190	A-224
			2.27	III	2200	9810	02	6120DB	Y	C	195	A-140	A-190	A-224
6.28	1330	150	-	-	750	3340	02	6090DA	Y		231	A-140	A-190	A-224
	1770	200	-	-	750	3340	02	6095DA	Y		231	A-140	A-190	A-224
	2420	274	1.10	I	1210	5400	02	6105DA	Y	A	231	A-140	A-190	A-224
			1.91	III	2200	9810	02	6120DB	Y	C	231	A-140	A-190	A-224
5.31	1330	150	-	-	750	3340	02	6090DA	Y		273	A-140	A-190	A-224
	1770	200	-	-	750	3340	02	6095DA	Y		273	A-140	A-190	A-224
	2210	250	-	-	1210	5400	02	6100DA	Y		273	A-140	A-190	A-224
	2870	324	0.93	-	1210	5400	02	6105DA	Y		273	A-140	A-190	A-224
			1.61	III	2200	9810	02	6120DB	Y	C	273	A-140	A-190	A-224
			1.95	III	2200	9810	02	6125DB	Y	C	273	A-140	A-190	A-224
4.55	1770	200	-	-	718	3200	02	6095DA	Y		319	A-140	A-190	A-224
	2210	250	-	-	1210	5400	02	6100DA	Y		319	A-140	A-190	A-224
	2650	300	-	-	1210	5400	02	6105DA	Y		319	A-140	A-190	A-224
	3340	378	1.38	II	2200	9810	02	6120DB	Y	B	319	A-140	A-190	A-224
			1.67	III	2200	9810	02	6125DB	Y	C	319	A-140	A-190	A-224
			2.06	III	3300	14700	02	6130DC	Y	C	319	A-142	A-192	A-226
3.85	1770	200	-	-	718	3200	02	6095DA	Y		377	A-140	A-190	A-224
	2210	250	-	-	1210	5400	02	6100DA	Y		377	A-140	A-190	A-224
	2650	300	-	-	1210	5400	02	6105DA	Y		377	A-140	A-190	A-224
	3960	447	1.16	I	2200	9810	02	6120DB	Y	A	377	A-140	A-190	A-224
			1.41	II	2200	9810	02	6125DB	Y	B	377	A-140	A-190	A-224
			1.75	III	3300	14700	02	6130DC	Y	C	377	A-142	A-192	A-226
3.07	2210	250	-	-	1210	5400	02	6100DA	Y		473	A-140	A-190	A-224
	2650	300	-	-	1210	5400	02	6105DA	Y		473	A-140	A-190	A-224
	4960	561	1.12	I	2200	9810	02	6125DB	Y	A	473	A-140	A-190	A-224
			1.39	II	3300	14700	02	6130DC	Y	B	473	A-142	A-192	A-226
			1.68	III	3300	14700	02	6135DC	Y	C	473	A-142	A-192	A-226
			2.19	III	3590	16000	02	6140DB	Y	C	473	A-142	A-192	A-226

Notes: [1] Refer to Technical Information Section for R1 and R2 Model Overhung Load information.
[2] CNHM, CHHM, CNFM, CHFM, CNVM, CVVM are type designations, see page A-3.
[3] Refer to 60 Hz Selection Tables for inverter duty (AV) selections.
[4] For single phase dimensions, type CNHM, see page A-244; type CNVM, see page A-245.
[5] For type CVFM, single reduction, see page A-219; double reduction, see page A-240.

1/4 HP, 0.2 kW, 50 Hz[3], 1450 RPM

Output Speed	Output Torque		Service Factor		Overhung Load[1]		Selection					Dimension Page[2]		
RPM	in•lb	N•m	SF	AGMA Class	lb	N	HP Symbol	Frame Size	Shaft Spec.	AGMA Class	Ratio	CNHM CHHM[4]	CNVM CVVM[4]	CNFM CHFM[5]
2.59	2650	300	-	-	1210	5400	02	6105DA	Y		559	A-140	A-190	A-224
	4650	525	-	-	2200	9810	02	6120DB	Y		559	A-140	A-190	A-224
	5870	663	0.95	-	2200	9810	02	6125DB	Y		559	A-140	A-190	A-224
			1.18	I	3300	14700	02	6130DC	Y	A	559	A-142	A-192	A-226
			1.42	II	3300	14700	02	6135DC	Y	B	559	A-142	A-192	A-226
			1.85	III	3590	16000	02	6140DB	Y	C	559	A-142	A-192	A-226
2.23	4650	525	-	-	2200	9810	02	6120DB	Y		649	A-140	A-190	A-224
	6800	769	0.82	-	2200	9810	02	6125DB	Y		649	A-140	A-190	A-224
			1.19	I	3300	14700	02	6130DC	Y	A	649	A-142	A-192	A-226
			1.36	II	3300	14700	02	6135DC	Y	B	649	A-142	A-192	A-226
			1.78	III	3590	16000	02	6145DB	Y	C	649	A-142	A-192	A-226
1.98	4650	525	-	-	2200	9810	02	6120DB	Y		731	A-140	A-190	A-224
	5570	630	-	-	2200	9810	02	6125DB	Y		731	A-140	A-190	A-224
	7670	867	1.08	I	3300	14700	02	6135DC	Y	A	731	A-142	A-192	A-226
			1.58	II	3590	16000	02	6145DB	Y	B	731	A-142	A-192	A-226
1.72	4600	520	-	-	2200	9810	02	6120DB	Y		841	A-140	A-190	A-224
	5570	630	-	-	2200	9810	02	6125DB	Y		841	A-140	A-190	A-224
	6900	780	-	-	3300	14700	02	6130DC	Y		841	A-142	A-192	A-226
	8820	997	0.94	-	3300	14700	02	6135DC	Y		841	A-142	A-192	A-226
			1.23	I	3590	16000	02	6140DB	Y	A	841	A-142	A-192	A-226
			1.37	II	3590	16000	02	6145DB	Y	B	841	A-142	A-192	A-226
1.45	4650	525	-	-	2200	9810	02	6120DB	Y		1003	A-140	A-190	A-224
	5570	630	-	-	2200	9810	02	6125DB	Y		1003	A-140	A-190	A-224
	8070	912	-	-	3300	14700	02	6130DC	Y		1003	A-142	A-192	A-226
	10500	1190	0.88	-	3300	14700	02	6135DC	Y		1003	A-142	A-192	A-226
			1.15	I	3590	16000	02	6145DB	Y	A	1003	A-142	A-192	A-226
1.16	5570	630	-	-	2200	9810	02	6125DB	Y		1247	A-140	A-190	A-224
	6900	780	-	-	3300	14700	02	6130DC	Y		1247	A-142	A-192	A-226
	8320	940	-	-	3300	14700	02	6135DC	Y		1247	A-142	A-192	A-226
	10900	1230	-	-	3590	16000	02	6140DB	Y		1247	A-142	A-192	A-226
	13100	1480	0.93	-	3410	15200	02	6145DB	Y		1247	A-142	A-192	A-226
0.980	7500	848	-	-	3300	14700	02	6130DC	Y		1479	A-142	A-192	A-226
	8660	979	-	-	3300	14700	02	6135DC	Y		1479	A-142	A-192	A-226
	10900	1230	-	-	3590	16000	02	6140DB	Y		1479	A-142	A-192	A-226
	11100	1250	-	-	3590	16000	02	6145DB	Y		1479	A-142	A-192	A-226
0.784	6900	780	-	-	3300	14700	02	6130DC	Y		1849	A-142	A-192	A-226
	8320	940	-	-	3300	14700	02	6135DC	Y		1849	A-142	A-192	A-226
	10900	1230	-	-	3590	16000	02	6140DB	Y		1849	A-142	A-192	A-226
	12100	1370	-	-	3530	15700	02	6145DB	Y		1849	A-142	A-192	A-226
0.702	8070	912	-	-	3300	14700	02	6130DC	Y		2065	A-142	A-192	A-226
	9290	1050	-	-	3300	14700	02	6135DC	Y		2065	A-142	A-192	A-226
	10900	1230	-	-	3590	16000	02	6140DB	Y		2065	A-142	A-192	A-226
	12100	1370	-	-	3590	16000	02	6145DB	Y		2065	A-142	A-192	A-226
0.572	8070	912	-	-	3300	14700	02	6130DC	Y		2537	A-142	A-192	A-226
	9290	1050	-	-	3300	14700	02	6135DC	Y		2537	A-142	A-192	A-226
	10900	1230	-	-	3590	16000	02	6140DB	Y		2537	A-142	A-192	A-226
	12100	1370	-	-	3590	16000	02	6145DB	Y		2537	A-142	A-192	A-226

Notes: [1] Refer to Technical Information Section for R1 and R2 Model Overhung Load information.
[2] CNHM, CHHM, CNFM, CHFM, CNVM, CVVM are type designations, see page A-3.
[3] Refer to 60 Hz Selection Tables for inverter duty (AV) selections.
[4] For single phase dimensions, type CNHM, see page A-244; type CNVM, see page A-245.
[5] For type CVFM, single reduction, see page A-219; double reduction, see page A-240.

SELECTION TABLES – 50 Hz

1/4 HP, 0.2 kW, 50 Hz[3], 1450 RPM

Output Speed	Output Torque		Service Factor		Overhung Load[1]		Selection					Dimension Page[2]		
RPM	in•lb	N•m	SF	AGMA Class	lb	N	HP Symbol	Frame Size	Shaft Spec.	AGMA Class	Ratio	CNHM CHHM[4]	CNVM CVVM[4]	CNFM CHFM[5]
0.476	7500	848	-	-	3300	14700	02	6130DC	Y		3045	A-142	A-192	A-226
	8660	979	-	-	3300	14700	02	6135DC	Y		3045	A-142	A-192	A-226
	10900	1230	-	-	3590	16000	02	6140DB	Y		3045	A-142	A-192	A-226
	11100	1250	-	-	3590	16000	02	6145DB	Y		3045	A-142	A-192	A-226
0.417	8070	912	-	-	3300	14700	02	6130DC	Y		3481	A-142	A-192	A-226
	9290	1050	-	-	3300	14700	02	6135DC	Y		3481	A-142	A-192	A-226
	10900	1230	-	-	3590	16000	02	6140DB	Y		3481	A-142	A-192	A-226
	12100	1370	-	-	3590	16000	02	6145DB	Y		3481	A-142	A-192	A-226
0.327	7500	848	-	-	3300	14700	02	6130DC	Y		4437	A-142	A-192	A-226
	8660	979	-	-	3300	14700	02	6135DC	Y		4437	A-142	A-192	A-226
	10900	1230	-	-	3590	16000	02	6140DB	Y		4437	A-142	A-192	A-226
	11100	1250	-	-	3590	16000	02	6145DB	Y		4437	A-142	A-192	A-226
0.282	7500	848	-	-	3300	14700	02	6130DC	Y		5133	A-142	A-192	A-226
	8660	979	-	-	3300	14700	02	6135DC	Y		5133	A-142	A-192	A-226
	10900	1230	-	-	3590	16000	02	6140DB	Y		5133	A-142	A-192	A-226
	11100	1250	-	-	3590	16000	02	6145DB	Y		5133	A-142	A-192	A-226
0.235	7500	848	-	-	3300	14700	02	6130DC	Y		6177	A-142	A-192	A-226
	8660	979	-	-	3300	14700	02	6135DC	Y		6177	A-142	A-192	A-226
	10900	1230	-	-	3590	16000	02	6140DB	Y		6177	A-142	A-192	A-226
	11100	1250	-	-	3590	16000	02	6145DB	Y		6177	A-142	A-192	A-226
0.192	7500	848	-	-	3300	14700	02	6130DC	Y		7569	A-142	A-192	A-226
	8660	979	-	-	3300	14700	02	6135DC	Y		7569	A-142	A-192	A-226
	10900	1230	-	-	3590	16000	02	6140DB	Y		7569	A-142	A-192	A-226
	11100	1250	-	-	3590	16000	02	6145DB	Y		7569	A-142	A-192	A-226

1/3 HP, 0.25 kW, 50 Hz[3], 1450 RPM

Output Speed	Output Torque		Service Factor		Overhung Load[1]		Selection					Dimension Page[2]		
RPM	in•lb	N•m	SF	AGMA Class	lb	N	HP Symbol	Frame Size	Shaft Spec.	AGMA Class	Ratio	CNHM CHHM[4]	CNVM CVVM[4]	CNFM CHFM[5]
242	83.1	9.39	1.14	I	179	795	03	6065	Y	A	6	A-122	A-176	A-204
			1.39	II	312	1390	03	6070	Y	B	6	A-122	A-176	A-204
			1.63	III	312	1390	03	6075	Y	C	6	A-122	A-176	A-204
			2.37	III	433	1930	03	6080	Y	C	6	A-122	A-176	A-204
181	111	12.5	1.14	I	204	908	03	6065	Y	A	8	A-122	A-176	A-204
			1.39	II	344	1530	03	6070	Y	B	8	A-122	A-176	A-204
			1.63	III	344	1530	03	6075	Y	C	8	A-122	A-176	A-204
			2.37	III	469	2090	03	6080	Y	C	8	A-122	A-176	A-204
132	152	17.2	1.14	I	265	1180	03	6065	Y	A	11	A-122	A-176	A-204
			1.39	II	386	1720	03	6070	Y	B	11	A-122	A-176	A-204
			1.63	III	386	1720	03	6075	Y	C	11	A-122	A-176	A-204
			2.37	III	519	2310	03	6080	Y	C	11	A-122	A-176	A-204
112	180	20.3	1.14	I	265	1180	03	6065	Y	A	13	A-122	A-176	A-204
			1.39	II	397	1770	03	6070	Y	B	13	A-122	A-176	A-204
			1.63	III	397	1770	03	6075	Y	C	13	A-122	A-176	A-204
			2.37	III	559	2490	03	6080	Y	C	13	A-122	A-176	A-204

Notes: [1] Refer to Technical Information Section for R1 and R2 Model Overhung Load information.
[2] CNHM, CHHM, CNFM, CHFM, CNVM, CVVM are type designations, see page A-3.
[3] Refer to 60 Hz Selection Tables for inverter duty (AV) selections.
[4] For single phase dimensions, type CNHM, see page A-244; type CNVM, see page A-245.
[5] For type CVFM, single reduction, see page A-219; double reduction, see page A-240.

1/3 HP, 0.25 kW, 50 Hz[3], 1450 RPM

Output Speed	Output Torque		Service Factor		Overhung Load[1]		Selection					Dimension Page[2]		
RPM	in•lb	N•m	SF	AGMA Class	lb	N	HP Symbol	Frame Size	Shaft Spec.	AGMA Class	Ratio	CNHM CHHM[4]	CNVM CVVM[4]	CNFM CHFM[5]
96.7	208	23.5	1.14	I	265	1180	03	6065	Y	A	15	A-122	A-176	A-204
			1.39	II	397	1770	03	6070	Y	B	15	A-122	A-176	A-204
			1.63	III	397	1770	03	6075	Y	C	15	A-122	A-176	A-204
			2.37	III	575	2560	03	6080	Y	C	15	A-122	A-176	A-204
85.3	235	26.6	1.13	I	265	1180	03	6065	Y	A	17	A-122	A-176	A-204
			1.39	II	397	1770	03	6070	Y	B	17	A-122	A-176	A-204
			1.63	III	397	1770	03	6075	Y	C	17	A-122	A-176	A-204
			2.37	III	575	2560	03	6080	Y	C	17	A-122	A-176	A-204
69.0	290	32.8	0.91	-	265	1180	03	6065	Y		21	A-122	A-176	A-204
			1.28	I	397	1770	03	6070	Y	A	21	A-122	A-176	A-204
			1.63	III	397	1770	03	6075	Y	C	21	A-122	A-176	A-204
			1.91	III	575	2560	03	6080	Y	C	21	A-122	A-176	A-204
58.0	346	39.1	1.18	I	397	1770	03	6075	Y	A	25	A-122	A-176	A-204
			1.36	II	575	2560	03	6080	Y	B	25	A-122	A-176	A-204
			1.90	III	575	2560	03	6085	Y	C	25	A-122	A-176	A-204
50.0	402	45.4	1.14	I	397	1770	03	6075	Y	A	29	A-122	A-176	A-204
			1.36	II	575	2560	03	6080	Y	B	29	A-122	A-176	A-204
			1.87	III	575	2560	03	6085	Y	C	29	A-122	A-176	A-204
41.4	484	54.7	1.09	I	397	1770	03	6075	Y	A	35	A-122	A-176	A-204
			1.16	I	575	2560	03	6080	Y	A	35	A-122	A-176	A-204
			1.31	II	575	2560	03	6085	Y	B	35	A-122	A-176	A-204
			2.45	III	750	3340	03	6090	Y	C	35	A-122	A-176	A-204
33.7	595	67.3	0.89	-	337	1500	03	6075	Y		43	A-122	A-176	A-204
			1.18	I	575	2560	03	6085	Y	A	43	A-122	A-176	A-204
			1.74	III	750	3340	03	6090	Y	C	43	A-122	A-176	A-204
			2.41	III	750	3340	03	6095	Y	C	43	A-122	A-176	A-204
28.4	706	79.8	0.96	-	559	2490	03	6085	Y		51	A-122	A-176	A-204
			1.33	II	750	3340	03	6090	Y	B	51	A-122	A-176	A-204
			1.63	III	750	3340	03	6095	Y	C	51	A-122	A-176	A-204
			2.24	III	1210	5400	03	6100	Y	C	51	A-122	A-176	A-204
24.6	817	92.3	0.94	-	537	2390	03	6085	Y		59	A-122	A-176	A-204
			1.24	I	750	3340	03	6090	Y	A	59	A-122	A-176	A-204
			1.34	II	750	3340	03	6095	Y	B	59	A-122	A-176	A-204
			2.06	III	1210	5400	03	6100	Y	C	59	A-122	A-176	A-204
20.4	982	111	1.11	I	750	3340	03	6095	Y	A	71	A-122	A-176	A-204
			1.74	III	1210	5400	03	6100	Y	C	71	A-122	A-176	A-204
			2.02	III	1210	5400	03	6105	Y	C	71	A-122	A-176	A-204
16.7	1200	136	1.05	I	750	3340	03	6095	Y	A	87	A-122	A-176	A-204
			1.73	III	1210	5400	03	6100	Y	C	87	A-122	A-176	A-204
			2.01	III	1210	5400	03	6105	Y	C	87	A-122	A-176	A-204
13.9	1360	154	1.17	I	750	3340	03	6095DA	Y	A	104	A-140	A-190	A-224
			1.72	III	1210	5400	03	6105DA	Y	C	104	A-140	A-190	A-224
			3.41	III	2200	9810	03	6120DB	Y	C	104	A-140	A-190	A-224
12.2	1650	186	1.14	I	1210	5400	03	6105	Y	A	119	A-122	A-176	A-204
12.0	1580	179	0.89	-	750	3340	03	6095DA	Y		121	A-140	A-190	A-224
			1.39	II	1210	5400	03	6100DA	Y	B	121	A-140	A-190	A-224
			1.72	III	1210	5400	03	6105DA	Y	C	121	A-140	A-190	A-224
			2.93	III	2200	9810	03	6120DB	Y	C	121	A-140	A-190	A-224

Notes: [1] Refer to Technical Information Section for R1 and R2 Model Overhung Load information.
[2] CNHM, CHHM, CNFM, CHFM, CNVM, CVVM are type designations, see page A-3.
[3] Refer to 60 Hz Selection Tables for inverter duty (AV) selections.
[4] For single phase dimensions, type CNHM, see page A-244; type CNVM, see page A-245.
[5] For type CVFM, single reduction, see page A-219; double reduction, see page A-240.

SELECTION TABLES – 50 Hz

1/3 HP, 0.25 kW, 50 Hz[3], 1450 RPM

Output Speed	Output Torque		Service Factor		Overhung Load[1]		Selection					Dimension Page[2]		
RPM	in•lb	N•m	SF	AGMA Class	lb	N	HP Symbol	Frame Size	Shaft Spec.	AGMA Class	Ratio	CNHM CHHM[4]	CNVM CVVM[4]	CNFM CHFM[5]
10.1	1330	150	-	-	750	3340	03	6090DA	Y		143	A-140	A-190	A-224
	1880	212	0.87	-	750	3340	03	6095DA	Y		143	A-140	A-190	A-224
			1.18	I	1210	5400	03	6100DA	Y	A	143	A-140	A-190	A-224
			1.42	II	1210	5400	03	6105DA	Y	B	143	A-140	A-190	A-224
			2.48	III	2200	9810	03	6120DB	Y	C	143	A-140	A-190	A-224
8.79	2170	245	0.82	-	750	3340	03	6095DA	Y		165	A-140	A-190	A-224
			1.23	I	1210	5400	03	6105DA	Y	A	165	A-140	A-190	A-224
			2.15	III	2200	9810	03	6120DB	Y	C	165	A-140	A-190	A-224
7.44	1770	200	-	-	750	3340	03	6095DA	Y		195	A-140	A-190	A-224
	2560	289	1.04	I	1210	5400	03	6105DA	Y	A	195	A-140	A-190	A-224
			1.82	III	2200	9810	03	6120DB	Y	C	195	A-140	A-190	A-224
6.28	2210	250	-	-	1210	5400	03	6100DA	Y		231	A-140	A-190	A-224
	3030	342	0.88	-	1110	4940	03	6105DA	Y		231	A-140	A-190	A-224
			1.52	II	2200	9810	03	6120DB	Y	B	231	A-140	A-190	A-224
			1.84	III	2200	9810	03	6125DB	Y	C	231	A-140	A-190	A-224
5.31	2650	300	-	-	1210	5400	03	6105DA	Y		273	A-140	A-190	A-224
	3580	405	1.29	I	2200	9810	03	6120DB	Y	A	273	A-140	A-190	A-224
			1.56	II	2200	9810	03	6125DB	Y	B	273	A-140	A-190	A-224
			1.93	III	3300	14700	03	6130DC	Y	C	273	A-142	A-192	A-226
4.55	4190	473	1.10	I	2200	9810	03	6120DB	Y	A	319	A-140	A-190	A-224
			1.33	II	2200	9810	03	6125DB	Y	B	319	A-140	A-190	A-224
			1.65	III	3300	14700	03	6130DC	Y	C	319	A-142	A-192	A-226
			1.99	III	3300	14700	03	6135DC	Y	C	319	A-142	A-192	A-226
3.85	4950	559	1.13	I	2200	9810	03	6125DB	Y	A	377	A-140	A-190	A-224
			1.40	II	3300	14700	03	6130DC	Y	B	377	A-142	A-192	A-226
			1.68	III	3300	14700	03	6135DC	Y	C	377	A-142	A-192	A-226
			2.19	III	3590	16000	03	6140DB	Y	C	377	A-142	A-192	A-226
3.07	4650	525	-	-	2200	9810	03	6120DB	Y		473	A-140	A-190	A-224
	6200	701	0.90	-	2200	9810	03	6125DB	Y		473	A-140	A-190	A-224
			1.11	I	3300	14700	03	6130DC	Y	A	473	A-142	A-192	A-226
			1.34	II	3300	14700	03	6135DC	Y	B	473	A-142	A-192	A-226
			1.75	III	3590	16000	03	6140DB	Y	C	473	A-142	A-192	A-226
2.59	5570	630	-	-	2200	9810	03	6125DB	Y		559	A-140	A-190	A-224
	7330	828	1.13	I	3300	14700	03	6135DC	Y	A	559	A-142	A-192	A-226
			1.48	II	3590	16000	03	6140DB	Y	B	559	A-142	A-192	A-226
			1.65	III	3590	16000	03	6145DB	Y	C	559	A-142	A-192	A-226
2.23	8510	962	1.09	I	3300	14700	03	6135DC	Y	A	649	A-142	A-192	A-226
			1.42	II	3590	16000	03	6145DB	Y	B	649	A-142	A-192	A-226
1.98	6900	780	-	-	3300	14700	03	6130DC	Y		731	A-142	A-192	A-226
	9560	1080	0.87	-	3300	14700	03	6135DC	Y		731	A-142	A-192	A-226
			1.26	I	3590	16000	03	6145DB	Y	A	731	A-142	A-192	A-226
1.72	8320	940	-	-	3300	14700	03	6135DC	Y		841	A-142	A-192	A-226
	11100	1250	1.10	I	3590	16000	03	6145DB	Y	A	841	A-142	A-192	A-226
1.45	9290	1050	-	-	3300	14700	03	6135DC	Y		1003	A-142	A-192	A-226
	10900	1230	-	-	3590	16000	03	6140DB	Y		1003	A-142	A-192	A-226
	13200	1490	0.92	-	3590	16000	03	6145DB	Y		1003	A-142	A-192	A-226
1.16	12100	1370	-	-	3530	15700	03	6145DB	Y		1247	A-142	A-192	A-226

Notes: [1] Refer to Technical Information Section for R1 and R2 Model Overhung Load information.
[2] CNHM, CHHM, CNFM, CHFM, CNVM, CVVM are type designations, see page A-3.
[3] Refer to 60 Hz Selection Tables for inverter duty (AV) selections.
[4] For single phase dimensions, type CNHM, see page A-244; type CNVM, see page A-245.
[5] For type CVFM, single reduction, see page A-219; double reduction, see page A-240.

1/2 HP, 0.4 kW, 50 Hz[3], 1450 RPM

Output Speed	Output Torque		Service Factor		Overhung Load[1]		Selection					Dimension Page[2]		
RPM	in•lb	N•m	SF	AGMA Class	lb	N	HP Symbol	Frame Size	Shaft Spec.	AGMA Class	Ratio	CNHM CHHM[4]	CNVM CVVM[4]	CNFM CHFM[5]
242	133	15.0	1.02	I	308	1370	05	6075	Y	A	6	A-122	A-176	A-204
			1.48	II	431	1920	05	6080	Y	B	6	A-122	A-176	A-204
			1.95	III	431	1920	05	6085	Y	C	6	A-122	A-176	A-204
181	177	20.0	1.02	I	339	1510	05	6075	Y	A	8	A-122	A-176	A-204
			1.48	II	467	2080	05	6080	Y	B	8	A-122	A-176	A-204
			1.95	III	467	2080	05	6085	Y	C	8	A-122	A-176	A-204
132	243	27.5	1.02	I	377	1680	05	6075	Y	A	11	A-122	A-176	A-204
			1.48	II	516	2300	05	6080	Y	B	11	A-122	A-176	A-204
			1.95	III	516	2300	05	6085	Y	C	11	A-122	A-176	A-204
112	288	32.5	1.02	I	397	1770	05	6075	Y	A	13	A-122	A-176	A-204
			1.48	II	555	2470	05	6080	Y	B	13	A-122	A-176	A-204
			1.95	III	555	2470	05	6085	Y	C	13	A-122	A-176	A-204
96.7	332	37.5	1.02	I	397	1770	05	6075	Y	A	15	A-122	A-176	A-204
			1.48	II	573	2550	05	6080	Y	B	15	A-122	A-176	A-204
			1.95	III	573	2550	05	6085	Y	C	15	A-122	A-176	A-204
85.3	376	42.5	1.02	I	397	1770	05	6075	Y	A	17	A-122	A-176	A-204
			1.48	II	575	2560	05	6080	Y	B	17	A-122	A-176	A-204
			1.95	III	575	2560	05	6085	Y	C	17	A-122	A-176	A-204
69.0	465	52.6	1.02	I	397	1770	05	6075	Y	A	21	A-122	A-176	A-204
			1.38	II	575	2560	05	6085	Y	B	21	A-122	A-176	A-204
			1.90	III	750	3340	05	6090	Y	C	21	A-122	A-176	A-204
58.0	554	62.6	1.19	I	575	2560	05	6085	Y	A	25	A-122	A-176	A-204
			1.68	III	750	3340	05	6090	Y	C	25	A-122	A-176	A-204
			2.17	III	750	3340	05	6095	Y	C	25	A-122	A-176	A-204
50.0	642	72.6	1.17	I	575	2560	05	6085	Y	A	29	A-122	A-176	A-204
			1.56	II	750	3340	05	6090	Y	B	29	A-122	A-176	A-204
			1.96	III	750	3340	05	6095	Y	C	29	A-122	A-176	A-204
41.4	775	87.6	0.82	-	575	2560	05	6085	Y		35	A-122	A-176	A-204
			1.53	II	750	3340	05	6090	Y	B	35	A-122	A-176	A-204
			1.90	III	750	3340	05	6095	Y	C	35	A-122	A-176	A-204
33.7	956	108	1.09	I	750	3340	05	6090	Y	A	43	A-122	A-176	A-204
			1.51	II	750	3340	05	6095	Y	B	43	A-122	A-176	A-204
			1.95	III	1210	5400	05	6100	Y	C	43	A-122	A-176	A-204
28.4	1130	128	1.02	I	745	3320	05	6095	Y	A	51	A-122	A-176	A-204
			1.40	II	1210	5400	05	6100	Y	B	51	A-122	A-176	A-204
			1.94	III	1210	5400	05	6105	Y	C	51	A-122	A-176	A-204
24.6	1310	148	0.84	-	741	3300	05	6095	Y		59	A-122	A-176	A-204
			1.29	I	1210	5400	05	6100	Y	A	59	A-122	A-176	A-204
			1.70	III	1210	5400	05	6105	Y	C	59	A-122	A-176	A-204
			2.15	III	1710	7610	05	6110	Y	C	59	A-122	A-176	A-204
20.4	1570	178	1.27	I	1210	5400	05	6105	Y	A	71	A-122	A-176	A-204
			1.67	III	1710	7610	05	6110	Y	C	71	A-126	A-176	A-204
			1.90	III	1710	7610	05	6115	Y	C	71	A-126	A-176	A-204
16.7	1930	218	1.26	I	1210	5400	05	6105	Y	A	87	A-122	A-176	A-204
			1.65	III	1710	7610	05	6110	Y	C	87	A-126	A-176	A-204
			1.90	III	1710	7610	05	6115	Y	C	87	A-126	A-176	A-204

Notes: [1] Refer to Technical Information Section for R1 and R2 Model Overhung Load information.
[2] CNHM, CHHM, CNFM, CHFM, CNVM, CVVM are type designations, see page A-3.
[3] Refer to 60 Hz Selection Tables for inverter duty (AV) selections.
[4] For single phase dimensions, type CNHM, see page A-244; type CNVM, see page A-245.
[5] For type CVFM, single reduction, see page A-219; double reduction, see page A-240.

SELECTION TABLES – 50 Hz

1/2 HP, 0.4 kW, 50 Hz[3], 1450 RPM

Output Speed	Output Torque		Service Factor		Overhung Load[1]		Selection					Dimension Page[2]		
RPM	in•lb	N•m	SF	AGMA Class	lb	N	HP Symbol	Frame Size	Shaft Spec.	AGMA Class	Ratio	CNHM CHHM[4]	CNVM CVVM[4]	CNFM CHFM[5]
13.9	1330	150	-	-	750	3340	05	6090DA	Y		104	A-140	A-190	A-224
	1600	181	-	-	750	3340	05	6095DA	Y		104	A-140	A-190	A-224
	2190	247	1.07	I	1210	5400	05	6105DA	Y	A	104	A-140	A-190	A-224
			2.13	III	2200	9810	05	6120DB	Y	C	104	A-140	A-190	A-224
12.0	1330	150	-	-	750	3340	05	6090DA	Y		121	A-140	A-190	A-224
	1420	160	-	-	750	3340	05	6095DA	Y		121	A-140	A-190	A-224
	2540	287	1.07	I	1210	5400	05	6105DA	Y	A	121	A-140	A-190	A-224
			1.83	III	2200	9810	05	6120DB	Y	C	121	A-140	A-190	A-224
10.1	1620	183	-	-	750	3340	05	6095DA	Y		143	A-140	A-190	A-224
	2210	250	-	-	1210	5400	05	6100DA	Y		143	A-140	A-190	A-224
	3000	339	0.88	-	1210	5400	05	6105DA	Y		143	A-140	A-190	A-224
			1.55	II	2200	9810	05	6120DB	Y	B	143	A-140	A-190	A-224
			1.86	III	2200	9810	05	6125DB	Y	C	143	A-140	A-190	A-224
8.79	2210	250	-	-	1210	5400	05	6100DA	Y		165	A-140	A-190	A-224
	2650	300	-	-	1210	5400	05	6105DA	Y		165	A-140	A-190	A-224
	3460	391	1.34	II	2200	9810	05	6120DB	Y	B	165	A-140	A-190	A-224
			1.61	III	2200	9810	05	6125DB	Y	C	165	A-140	A-190	A-224
			1.99	III	3300	14700	05	6130DC	Y	C	165	A-142	A-192	A-226
7.44	2210	250	-	-	1210	5400	05	6100DA	Y		195	A-140	A-190	A-224
	2650	300	-	-	1210	5400	05	6105DA	Y		195	A-140	A-190	A-224
	4090	462	1.14	I	2200	9810	05	6120DB	Y	A	195	A-140	A-190	A-224
			1.36	II	2200	9810	05	6125DB	Y	B	195	A-140	A-190	A-224
			1.69	III	3300	14700	05	6130DC	Y	C	195	A-142	A-192	A-226
			2.03	III	3300	14700	05	6135DC	Y	C	195	A-142	A-192	A-226
6.28	2650	300	-	-	1210	5400	05	6105DA	Y		231	A-140	A-190	A-224
	4850	548	1.15	I	2200	9810	05	6125DB	Y	A	231	A-140	A-190	A-224
			1.42	II	3300	14700	05	6130DC	Y	B	231	A-142	A-192	A-226
			1.72	III	3300	14700	05	6135DC	Y	C	231	A-142	A-192	A-226
			2.24	III	3590	16000	05	6140DB	Y	C	231	A-142	A-192	A-226
5.31	4620	522	-	-	2200	9810	05	6120DB	Y		273	A-140	A-190	A-224
	5720	647	0.97	-	2200	9810	05	6125DB	Y		273	A-140	A-190	A-224
			1.21	I	3300	14700	05	6130DC	Y	A	273	A-142	A-192	A-226
			1.45	II	3300	14700	05	6135DC	Y	B	273	A-142	A-192	A-226
			1.89	III	3590	16000	05	6140DB	Y	C	273	A-142	A-192	A-226
4.55	4600	520	-	-	2200	9810	05	6120DB	Y		319	A-140	A-190	A-224
	6690	756	0.83	-	2200	9810	05	6125DB	Y		319	A-140	A-190	A-224
			1.03	I	3300	14700	05	6130DC	Y	A	319	A-142	A-192	A-226
			1.62	III	3590	16000	05	6140DB	Y	C	319	A-142	A-192	A-226
			1.81	III	3590	16000	05	6145DB	Y	C	319	A-142	A-192	A-226
3.85	4600	520	-	-	2200	9810	05	6120DB	Y		377	A-140	A-190	A-224
	5570	630	-	-	2200	9810	05	6125DB	Y		377	A-140	A-190	A-224
	6900	780	-	-	3300	14700	05	6130DC	Y		377	A-142	A-192	A-226
	7910	894	1.05	I	3300	14700	05	6135DC	Y	A	377	A-142	A-192	A-226
			1.38	II	3590	16000	05	6140DB	Y	B	377	A-142	A-192	A-226
			1.53	II	3590	16000	05	6145DB	Y	B	377	A-142	A-192	A-226
			1.96	III	4960	22100	05	6160DC	Y	C	377	A-142	A-192	A-228

Notes: [1] Refer to Technical Information Section for R1 and R2 Model Overhung Load information.
[2] CNHM, CHHM, CNFM, CHFM, CNVM, CVVM are type designations, see page A-3.
[3] Refer to 60 Hz Selection Tables for inverter duty (AV) selections.
[4] For single phase dimensions, type CNHM, see page A-244; type CNVM, see page A-245.
[5] For type CVFM, single reduction, see page A-219; double reduction, see page A-240.

1/2 HP, 0.4 kW, 50 Hz[3], 1450 RPM

Output Speed	Output Torque		Service Factor		Overhung Load[1]		Selection					Dimension Page[2]		
RPM	in•lb	N•m	SF	AGMA Class	lb	N	HP Symbol	Frame Size	Shaft Spec.	AGMA Class	Ratio	CNHM CHHM[4]	CNVM CVVM[4]	CNFM CHFM[5]
3.07	5570	630	-	-	2200	9810	05	6125DB	Y		473	A-140	A-190	A-224
	6900	780	-	-	3300	14700	05	6130DC	Y		473	A-142	A-192	A-226
	9910	1120	0.84	-	3300	14700	05	6135DC	Y		473	A-142	A-192	A-226
			1.10	I	3590	16000	05	6140DB	Y	A	473	A-142	A-192	A-226
			1.22	I	3590	16000	05	6145DB	Y	A	473	A-142	A-192	A-226
			1.55	II	4960	22100	05	6160DC	Y	B	473	A-142	A-192	A-228
			1.87	III	4960	22100	05	6165DC	Y	C	473	A-142	A-192	A-228
2.59	6900	780	-	-	3300	14700	05	6130DC	Y		559	A-142	A-192	A-226
	8320	940	-	-	3300	14700	05	6135DC	Y		559	A-142	A-192	A-226
	11800	1330	1.03	I	3570	15900	05	6145DB	Y	A	559	A-142	A-192	A-226
			1.31	II	4960	22100	05	6160DC	Y	B	559	A-142	A-192	A-228
			1.58	II	4960	22100	05	6165DC	Y	B	559	A-142	A-192	A-228
			1.91	III	6620	29500	05	6170DC	Y	C	559	A-142	A-192	A-228
2.23	8070	912	-	-	3300	14700	05	6130DC	Y		649	A-142	A-192	A-226
	9290	1050	-	-	3300	14700	05	6135DC	Y		649	A-142	A-192	A-226
	10900	1230	-	-	3590	16000	05	6140DB	Y		649	A-142	A-192	A-226
	13600	1540	0.89	-	3590	16000	05	6145DB	Y		649	A-142	A-192	A-226
			1.14	I	4960	22100	05	6160DC	Y	A	649	A-142	A-192	A-228
			1.36	II	4960	22100	05	6165DC	Y	B	649	A-142	A-192	A-228
			1.64	III	6620	29500	05	6170DC	Y	C	649	A-142	A-192	A-228
			2.05	III	6620	29500	05	6175DC	Y	C	649	A-142	A-192	A-228
1.98	8320	940	-	-	3300	14700	05	6135DC	Y		731	A-142	A-192	A-226
	10900	1230	-	-	3590	16000	05	6140DB	Y		731	A-142	A-192	A-226
	12100	1370	-	-	3530	15700	05	6145DB	Y		731	A-142	A-192	A-226
	15300	1730	1.00	I	4960	22100	05	6160DC	Y	A	731	A-142	A-192	A-228
			1.21	I	4960	22100	05	6165DC	Y	A	731	A-142	A-192	A-228
			1.46	II	6620	29500	05	6170DC	Y	B	731	A-142	A-192	A-228
			1.82	III	6620	29500	05	6175DC	Y	C	731	A-142	A-192	A-228
1.72	10900	1230	-	-	3590	16000	05	6140DB	Y		841	A-142	A-192	A-226
	12100	1370	-	-	3550	15800	05	6145DB	Y		841	A-142	A-192	A-226
	15600	1760	-	-	4960	22100	05	6160DC	Y		841	A-142	A-192	A-228
	17600	1990	1.05	I	4960	22100	05	6165DC	Y	A	841	A-142	A-192	A-228
			1.27	I	6620	29500	05	6170DC	Y	A	841	A-142	A-192	A-228
			1.58	II	6620	29500	05	6175DC	Y	B	841	A-142	A-192	A-228
1.45	12100	1370	-	-	3590	16000	05	6145DB	Y		1003	A-142	A-192	A-226
	15600	1760	-	-	4960	22100	05	6160DC	Y		1003	A-142	A-192	A-228
	21100	2380	0.88	-	4960	22100	05	6165DC	Y		1003	A-142	A-192	A-228
			1.06	I	6620	29500	05	6170DC	Y	A	1003	A-142	A-192	A-228
			1.32	II	6620	29500	05	6175DC	Y	B	1003	A-142	A-192	A-228
1.16	15400	1740	-	-	4960	22100	05	6160DC	Y		1247	A-142	A-192	A-228
	18600	2100	-	-	4960	22100	05	6165DC	Y		1247	A-142	A-192	A-228
	22400	2530	-	-	6620	29500	05	6170DC	Y		1247	A-142	A-192	A-228
	26200	2960	1.07	I	6620	29500	05	6175DC	Y	A	1247	A-142	A-192	A-228
0.980	15600	1760	-	-	4960	22100	05	6160DC	Y		1479	A-142	A-192	A-228
	18100	2050	-	-	4890	21800	05	6165DC	Y		1479	A-142	A-192	A-228
	22400	2530	-	-	6620	29500	05	6170DC	Y		1479	A-142	A-192	A-228
	31100	3510	0.90	-	6620	29500	05	6175DC	Y		1479	A-142	A-192	A-228

Notes: [1] Refer to Technical Information Section for R1 and R2 Model Overhung Load information.
[2] CNHM, CHHM, CNFM, CHFM, CNVM, CVVM are type designations, see page A-3.
[3] Refer to 60 Hz Selection Tables for inverter duty (AV) selections.
[4] For single phase dimensions, type CNHM, see page A-244; type CNVM, see page A-245.
[5] For type CVFM, single reduction, see page A-219; double reduction, see page A-240.

SELECTION TABLES – 50 Hz

1/2 HP, 0.4 kW, 50 Hz[3], 1450 RPM

Output Speed	Output Torque		Service Factor		Overhung Load[1]		Selection					Dimension Page[2]		
RPM	in•lb	N•m	SF	AGMA Class	lb	N	HP Symbol	Frame Size	Shaft Spec.	AGMA Class	Ratio	CNHM CHHM[4]	CNVM CVVM[4]	CNFM CHFM[5]
0.784	18600	2100	-	-	4960	22100	05	6165DC	Y		1849	A-142	A-192	A-228
	22400	2530	-	-	6620	29500	05	6170DC	Y		1849	A-142	A-192	A-228
	27900	3150	-	-	6620	29500	05	6175DC	Y		1849	A-142	A-192	A-228
0.702	22400	2530	-	-	6620	29500	05	6170DC	Y		2065	A-142	A-192	A-228
	27900	3150	-	-	6620	29500	05	6175DC	Y		2065	A-142	A-192	A-228
0.572	27900	3150	-	-	6620	29500	05	6175DC	Y		2537	A-142	A-192	A-228

3/4 HP, 0.55 kW, 50 Hz[3], 1450 RPM

Output Speed	Output Torque		Service Factor		Overhung Load[1]		Selection					Dimension Page[2]		
RPM	in•lb	N•m	SF	AGMA Class	lb	N	HP Symbol	Frame Size	Shaft Spec.	AGMA Class	Ratio	CNHM CHHM[4]	CNVM CVVM[4]	CNFM CHFM[5]
242	182	20.6	1.08	I	429	1910	08	6080	Y	A	6	A-122	A-176	A-204
			1.41	II	429	1910	08	6085	Y	B	6	A-122	A-176	A-204
			2.09	III	640	2850	08	6090	Y	C	6	A-122	A-176	A-204
181	243	27.5	1.08	I	465	2070	08	6080	Y	A	8	A-122	A-176	A-204
			1.41	II	465	2070	08	6085	Y	B	8	A-122	A-176	A-204
			2.09	III	714	3180	08	6090	Y	C	8	A-122	A-176	A-204
132	335	37.9	1.08	I	512	2280	08	6080	Y	A	11	A-122	A-176	A-204
			1.41	II	512	2280	08	6085	Y	B	11	A-122	A-176	A-204
			2.09	III	750	3340	08	6090	Y	C	11	A-122	A-176	A-204
112	396	44.7	1.08	I	550	2450	08	6080	Y	A	13	A-122	A-176	A-204
			1.41	II	550	2450	08	6085	Y	B	13	A-122	A-176	A-204
			2.09	III	750	3340	08	6090	Y	C	13	A-122	A-176	A-204
96.7	457	51.6	1.08	I	566	2520	08	6080	Y	A	15	A-122	A-176	A-204
			1.41	II	566	2520	08	6085	Y	B	15	A-122	A-176	A-204
			2.09	III	750	3340	08	6090	Y	C	15	A-122	A-176	A-204
85.3	518	58.5	1.08	I	575	2560	08	6080	Y	A	17	A-122	A-176	A-204
			1.41	II	575	2560	08	6085	Y	B	17	A-122	A-176	A-204
			2.09	III	750	3340	08	6090	Y	C	17	A-122	A-176	A-204
69.0	640	72.3	1.00	I	575	2560	08	6085	Y	A	21	A-122	A-176	A-204
			1.38	II	750	3340	08	6090	Y	B	21	A-122	A-176	A-204
			2.75	III	750	3340	08	6095	Y	C	21	A-122	A-176	A-204
58.0	761	86.0	0.86	-	564	2510	08	6085	Y		25	A-122	A-176	A-204
			1.22	I	750	3340	08	6090	Y	A	25	A-122	A-176	A-204
			1.57	II	750	3340	08	6095	Y	B	25	A-122	A-176	A-204
			2.31	III	1210	5400	08	6100	Y	C	25	A-122	A-176	A-204
50.0	883	99.8	0.85	-	516	2300	08	6085	Y		29	A-122	A-176	A-204
			1.14	I	750	3340	08	6090	Y	A	29	A-122	A-176	A-204
			1.43	II	750	3340	08	6095	Y	B	29	A-122	A-176	A-204
			2.20	III	1210	5400	08	6100	Y	C	29	A-122	A-176	A-204
41.4	1060	120	1.11	I	750	3340	08	6090	Y	A	35	A-122	A-176	A-204
			1.38	II	750	3340	08	6095	Y	B	35	A-122	A-176	A-204
			1.77	III	1210	5400	08	6100	Y	C	35	A-122	A-176	A-204
33.7	1310	148	1.10	I	745	3320	08	6095	Y	A	43	A-122	A-176	A-204
			1.42	II	1210	5400	08	6100	Y	B	43	A-122	A-176	A-204
			1.96	III	1210	5400	08	6105	Y	C	43	A-122	A-176	A-204

Notes: [1] Refer to Technical Information Section for R1 and R2 Model Overhung Load information.
[2] CNHM, CHHM, CNFM, CHFM, CNVM, CVVM are type designations, see page A-3.
[3] Refer to 60 Hz Selection Tables for inverter duty (AV) selections.
[4] For single phase dimensions, type CNHM, see page A-244; type CNVM, see page A-245.
[5] For type CVFM, single reduction, see page A-219; double reduction, see page A-240.

3/4 HP, 0.55 kW, 50 Hz[3], 1450 RPM

Output Speed	Output Torque		Service Factor		Overhung Load[1]		Selection					Dimension Page[2]		
RPM	in•lb	N•m	SF	AGMA Class	lb	N	HP Symbol	Frame Size	Shaft Spec.	AGMA Class	Ratio	CNHM CHHM[4]	CNVM CVVM[4]	CNFM CHFM[5]
28.4	1560	176	1.02	I	1210	5400	08	6100	Y	A	51	A-122	A-176	A-204
			1.41	II	1210	5400	08	6105	Y	B	51	A-122	A-176	A-204
			1.72	III	1710	7610	08	6110	Y	C	51	A-122	A-176	A-204
			2.02	III	1710	7610	08	6115	Y	C	51	A-122	A-176	A-204
24.6	1800	203	1.24	I	1210	5400	08	6105	Y	A	59	A-122	A-176	A-204
			1.56	II	1710	7610	08	6110	Y	B	59	A-122	A-176	A-204
			1.84	III	1710	7610	08	6115	Y	C	59	A-122	A-176	A-204
20.4	2160	244	0.92	-	1210	5380	08	6105	Y		71	A-122	A-176	A-204
			1.22	I	1710	7610	08	6110	Y	A	71	A-122	A-176	A-204
			1.38	II	1710	7610	08	6115	Y	B	71	A-126	A-176	A-204
			1.74	III	2200	9810	08	6120	Y	C	71	A-126	A-176	A-204
			2.07	III	2200	9810	08	6125	Y	C	71	A-126	A-176	A-204
16.7	2650	299	0.92	-	1080	4800	08	6105	Y		87	A-122	A-176	A-204
			1.20	I	1710	7610	08	6110	Y	A	87	A-126	A-176	A-204
			1.38	II	1710	7610	08	6115	Y	B	87	A-126	A-176	A-204
			1.72	III	2200	9810	08	6120	Y	C	87	A-126	A-176	A-204
			1.87	III	2200	9810	08	6125	Y	C	87	A-126	A-176	A-204
13.9	3000	339	1.55	II	2200	9810	08	6120DB	Y	B	104	A-140	A-190	A-224
			1.86	III	2200	9810	08	6125DB	Y	C	104	A-140	A-190	A-224
12.0	3490	394	1.58	II	2200	9810	08	6125DB	Y	B	121	A-140	A-190	A-224
			1.98	III	3300	14700	08	6130DC	Y	C	121	A-142	A-192	A-226
10.1	4120	466	1.13	I	2200	9810	08	6120DB	Y	A	143	A-140	A-190	A-224
			1.35	II	2200	9810	08	6125DB	Y	B	143	A-140	A-190	A-224
			1.67	III	3300	14700	08	6130DC	Y	C	143	A-142	A-192	A-226
			2.02	III	3300	14700	08	6135DC	Y	C	143	A-142	A-192	A-226
8.79	4760	538	1.17	I	2200	9810	08	6125DB	Y	A	165	A-140	A-190	A-224
			1.45	II	3300	14700	08	6130DC	Y	B	165	A-142	A-192	A-226
			1.75	III	3300	14700	08	6135DC	Y	C	165	A-142	A-192	A-226
7.44	4650	525	-	-	2200	9810	08	6120DB	Y		195	A-140	A-190	A-224
	5630	636	0.98	-	2200	9810	08	6125DB	Y		195	A-140	A-190	A-224
			1.23	I	3300	14700	08	6130DC	Y	A	195	A-142	A-192	A-226
			1.48	II	3300	14700	08	6135DC	Y	B	195	A-142	A-192	A-226
			1.93	III	3590	16000	08	6140DB	Y	C	195	A-142	A-192	A-226
6.28	4620	522	-	-	2200	9810	08	6120DB	Y		231	A-140	A-190	A-224
	6660	753	0.84	-	2200	9810	08	6125DB	Y		231	A-140	A-190	A-224
			1.04	I	3300	14700	08	6130DC	Y	A	231	A-142	A-192	A-226
			1.25	I	3300	14700	08	6135DC	Y	A	231	A-142	A-192	A-226
			1.63	III	3590	16000	08	6140DB	Y	C	231	A-142	A-192	A-226
			1.78	III	3590	16000	08	6145DB	Y	C	231	A-142	A-192	A-226
5.31	5570	630	-	-	2200	9810	08	6125DB	Y		273	A-140	A-190	A-224
	6900	780	-	-	3300	14700	08	6130DC	Y		273	A-142	A-192	A-226
	7870	890	1.06	I	3300	14700	08	6135DC	Y	A	273	A-142	A-192	A-226
			1.38	II	3590	16000	08	6140DB	Y	B	273	A-142	A-192	A-226
			1.50	II	3590	16000	08	6145DB	Y	B	273	A-142	A-192	A-226
			1.97	III	4960	22100	08	6160DC	Y	C	273	A-142	A-192	A-228

Notes: [1] Refer to Technical Information Section for R1 and R2 Model Overhung Load information.
[2] CNHM, CHHM, CNFM, CHFM, CNVM, CVVM are type designations, see page A-3.
[3] Refer to 60 Hz Selection Tables for inverter duty (AV) selections.
[4] For single phase dimensions, type CNHM, see page A-244; type CNVM, see page A-245.
[5] For type CVFM, single reduction, see page A-219; double reduction, see page A-240.

SELECTION TABLES – 50 Hz

3/4 HP, 0.55 kW, 50 Hz[3], 1450 RPM

Output Speed	Output Torque		Service Factor		Overhung Load[1]		Selection					Dimension Page[2]		
RPM	in•lb	N•m	SF	AGMA Class	lb	N	HP Symbol	Frame Size	Shaft Spec.	AGMA Class	Ratio	CNHM CHHM[4]	CNVM CVVM[4]	CNFM CHFM[5]
4.55	5570	630	-	-	2200	9810	08	6125DB	Y		319	A-140	A-190	A-224
	6900	780	-	-	3300	14700	08	6130DC	Y		319	A-142	A-192	A-226
	9200	1040	0.90	-	3300	14700	08	6135DC	Y		319	A-142	A-192	A-226
			1.18	I	3590	16000	08	6140DB	Y	A	319	A-142	A-192	A-226
			1.32	II	3590	16000	08	6145DB	Y	B	319	A-142	A-192	A-226
			1.69	III	4960	22100	08	6160DC	Y	C	319	A-142	A-192	A-228
			2.02	III	4960	22100	08	6165DC	Y	C	319	A-142	A-192	A-228
3.85	6900	780	-	-	3300	14700	08	6130DC	Y		377	A-142	A-192	A-226
	8320	940	-	-	3300	14700	08	6135DC	Y		377	A-142	A-192	A-226
	10900	1230	1.00	I	3590	16000	08	6140DB	Y	A	377	A-142	A-192	A-226
			1.11	I	3590	16000	08	6145DB	Y	A	377	A-142	A-192	A-226
			1.43	II	4960	22100	08	6160DC	Y	B	377	A-142	A-192	A-228
			1.71	III	4960	22100	08	6165DC	Y	C	377	A-142	A-192	A-228
			2.06	III	6620	29500	08	6170DC	Y	C	377	A-142	A-192	A-228
3.07	8320	940	-	-	3300	14700	08	6135DC	Y		473	A-142	A-192	A-226
	10900	1230	-	-	3590	16000	08	6140DB	Y		473	A-142	A-192	A-226
	13600	1540	0.89	-	3320	14800	08	6145DB	Y		473	A-142	A-192	A-226
			1.13	I	4960	22100	08	6160DC	Y	A	473	A-142	A-192	A-228
			1.36	II	4960	22100	08	6165DC	Y	B	473	A-142	A-192	A-228
			1.64	III	6620	29500	08	6170DC	Y	C	473	A-142	A-192	A-228
			2.04	III	6620	29500	08	6175DC	Y	C	473	A-142	A-192	A-228
2.59	10900	1230	-	-	3590	16000	08	6140DB	Y		559	A-142	A-192	A-226
	12100	1370	-	-	3530	15700	08	6145DB	Y		559	A-142	A-192	A-226
	15400	1740	-	-	4960	22100	08	6160DC	Y		559	A-142	A-192	A-228
	16100	1820	1.15	I	4960	22100	08	6165DC	Y	A	559	A-142	A-192	A-228
			1.39	II	6620	29500	08	6170DC	Y	B	559	A-142	A-192	A-228
			1.73	III	6620	29500	08	6175DC	Y	C	559	A-142	A-192	A-228
2.23	12100	1370	-	-	3590	16000	08	6145DB	Y		649	A-142	A-192	A-226
	15600	1760	-	-	4960	22100	08	6160DC	Y		649	A-142	A-192	A-228
	18800	2120	0.98	-	4960	22100	08	6165DC	Y		649	A-142	A-192	A-228
			1.20	I	6620	29500	08	6170DC	Y	A	649	A-142	A-192	A-228
			1.49	II	6620	29500	08	6175DC	Y	B	649	A-142	A-192	A-228
1.98	15400	1740	-	-	4960	22100	08	6160DC	Y		731	A-142	A-192	A-228
	21100	2380	0.88	-	4960	22100	08	6165DC	Y		731	A-142	A-192	A-228
			1.06	I	6620	29500	08	6170DC	Y	A	731	A-142	A-192	A-228
			1.32	II	6620	29500	08	6175DC	Y	B	731	A-142	A-192	A-228
1.72	15600	1760	-	-	4960	22100	08	6160DC	Y		841	A-142	A-192	A-228
	18600	2100	-	-	4960	22100	08	6165DC	Y		841	A-142	A-192	A-228
	22400	2530	-	-	6620	29500	08	6170DC	Y		841	A-142	A-192	A-228
	24200	2740	1.15	I	6620	29500	08	6175DC	Y	A	841	A-142	A-192	A-228
1.45	18600	2100	-	-	4960	22100	08	6165DC	Y		1003	A-142	A-192	A-228
	22400	2530	-	-	6620	29500	08	6170DC	Y		1003	A-142	A-192	A-228
	28900	3270	0.96	-	6620	29500	08	6175DC	Y		1003	A-142	A-192	A-228
1.16	22400	2530	-	-	6620	29500	08	6170DC	Y		1247	A-142	A-192	A-228
	27900	3150	-	-	6620	29500	08	6175DC	Y		1247	A-142	A-192	A-228
0.980	27900	3150	-	-	6620	29500	08	6175DC	Y		1479	A-142	A-192	A-228

Notes: [1] Refer to Technical Information Section for R1 and R2 Model Overhung Load information.
[2] CNHM, CHHM, CNFM, CHFM, CNVM, CVVM are type designations, see page A-3.
[3] Refer to 60 Hz Selection Tables for inverter duty (AV) selections.
[4] For single phase dimensions, type CNHM, see page A-244; type CNVM, see page A-245.
[5] For type CVFM, single reduction, see page A-219; double reduction, see page A-240.

1 HP, 0.75 kW, 50 Hz[3], 1450 RPM

Output Speed	Output Torque		Service Factor		Overhung Load[1]		Selection					Dimension Page[2]		
RPM	in•lb	N•m	SF	AGMA Class	lb	N	HP Symbol	Frame Size	Shaft Spec.	AGMA Class	Ratio	CNHM CHHM[4]	CNVM CVVM[4]	CNFM CHFM[5]
242	250	28.2	1.04	I	427	1900	1	6085	Y	A	6	A-122	A-176	A-204
			1.53	II	638	2840	1	6090	Y	B	6	A-122	A-176	A-204
			2.03	III	638	2840	1	6095	Y	C	6	A-122	A-176	A-204
181	332	37.5	1.04	I	460	2050	1	6085	Y	A	8	A-122	A-176	A-204
			1.53	II	710	3160	1	6090	Y	B	8	A-122	A-176	A-204
			2.03	III	710	3160	1	6095	Y	C	8	A-122	A-176	A-204
132	457	51.6	1.04	I	505	2250	1	6085	Y	A	11	A-122	A-176	A-204
			1.53	II	750	3340	1	6090	Y	B	11	A-122	A-176	A-204
			2.03	III	750	3340	1	6095	Y	C	11	A-122	A-176	A-204
112	540	61.0	1.04	I	541	2410	1	6085	Y	A	13	A-122	A-176	A-204
			1.53	II	750	3340	1	6090	Y	B	13	A-122	A-176	A-204
			2.03	III	750	3340	1	6095	Y	C	13	A-122	A-176	A-204
96.7	623	70.4	1.04	I	559	2490	1	6085	Y	A	15	A-122	A-176	A-204
			1.53	II	750	3340	1	6090	Y	B	15	A-122	A-176	A-204
			2.03	III	750	3340	1	6095	Y	C	15	A-122	A-176	A-204
85.3	706	79.8	1.04	I	575	2560	1	6085	Y	A	17	A-122	A-176	A-204
			1.53	II	750	3340	1	6090	Y	B	17	A-122	A-176	A-204
			2.03	III	750	3340	1	6095	Y	C	17	A-122	A-176	A-204
69.0	872	98.5	1.01	I	750	3340	1	6090	Y	A	21	A-122	A-176	A-204
			2.01	III	750	3340	1	6095	Y	C	21	A-122	A-176	A-204
58.0	1040	117	1.15	I	750	3340	1	6095	Y	A	25	A-122	A-176	A-204
			1.69	III	1210	5400	1	6100	Y	C	25	A-122	A-176	A-204
			2.23	III	1210	5400	1	6105	Y	C	25	A-122	A-176	A-204
50.0	1200	136	1.05	I	745	3320	1	6095	Y	A	29	A-122	A-176	A-204
			1.61	III	1210	5400	1	6100	Y	C	29	A-122	A-176	A-204
			2.12	III	1210	5400	1	6105	Y	C	29	A-122	A-176	A-204
41.4	1450	164	1.01	I	734	3270	1	6095	Y	A	35	A-122	A-176	A-204
			1.30	II	1210	5400	1	6100	Y	B	35	A-122	A-176	A-204
			1.60	III	1210	5400	1	6105	Y	C	35	A-122	A-176	A-204
			2.00	III	1680	7470	1	6110	Y	C	35	A-126	A-176	A-204
33.7	1790	202	0.80	-	721	3210	1	6095	Y		43	A-122	A-176	A-204
			1.04	I	1210	5400	1	6100	Y	A	43	A-122	A-176	A-204
			1.44	II	1210	5400	1	6105	Y	B	43	A-122	A-176	A-204
			1.73	III	1710	7610	1	6110	Y	C	43	A-126	A-176	A-204
			2.03	III	1710	7610	1	6115	Y	C	43	A-126	A-176	A-204
28.4	2110	239	1.03	I	1210	5400	1	6105	Y	A	51	A-122	A-176	A-204
			1.48	II	1710	7610	1	6115	Y	B	51	A-126	A-176	A-204
			2.17	III	2200	9810	1	6120	Y	C	51	A-126	A-176	A-204
24.6	2450	277	0.91	-	1210	5400	1	6105	Y		59	A-122	A-176	A-204
			1.15	I	1710	7610	1	6110	Y	A	59	A-126	A-176	A-204
			1.35	II	1710	7610	1	6115	Y	B	59	A-126	A-176	A-204
			1.73	III	2200	9810	1	6120	Y	C	59	A-126	A-176	A-204
			2.16	III	2200	9810	1	6125	Y	C	59	A-126	A-176	A-204
20.4	2950	333	1.01	I	1710	7610	1	6115	Y	A	71	A-126	A-176	A-204
			1.52	II	2200	9810	1	6125	Y	B	71	A-126	A-176	A-204
			2.35	III	3140	14000	1	6130	Y	C	71	A-128	A-180	A-208
16.7	3610	408	1.01	I	1700	7550	1	6115	Y	A	87	A-126	A-176	A-204
			1.37	II	2200	9810	1	6125	Y	B	87	A-126	A-176	A-204
			1.89	III	3300	14700	1	6130	Y	C	87	A-128	A-180	A-208

Notes: [1] Refer to Technical Information Section for R1 and R2 Model Overhung Load information.
[2] CNHM, CHHM, CNFM, CHFM, CNVM, CVVM are type designations, see page A-3.
[3] Refer to 60 Hz Selection Tables for inverter duty (AV) selections.
[4] For single phase dimensions, type CNHM, see page A-244; type CNVM, see page A-245.
[5] For type CVFM, single reduction, see page A-219; double reduction, see page A-240.

SELECTION TABLES – 50 Hz

1 HP, 0.75 kW, 50 Hz[3], 1450 RPM

Output Speed	Output Torque		Service Factor		Overhung Load[1]		Selection					Dimension Page[2]		
RPM	in•lb	N•m	SF	AGMA Class	lb	N	HP Symbol	Frame Size	Shaft Spec.	AGMA Class	Ratio	CNHM CHHM[4]	CNVM CVVM[4]	CNFM CHFM[5]
13.9	4090	462	1.14	I	2200	9810	1	6120DB	Y	A	104	A-140	A-190	A-224
			1.36	II	2200	9810	1	6125DB	Y	B	104	A-140	A-190	A-224
			1.69	III	3300	14700	1	6130DC	Y	C	104	A-142	A-192	A-226
			2.03	III	3300	14700	1	6135DC	Y	C	104	A-142	A-192	A-226
12.0	4760	538	1.16	I	2200	9810	1	6125DB	Y	A	121	A-140	A-190	A-224
			1.45	II	3300	14700	1	6130DC	Y	B	121	A-142	A-192	A-226
			1.75	III	3300	14700	1	6135DC	Y	C	121	A-142	A-192	A-226
10.1	4650	525	-	-	2200	9810	1	6120DB	Y		143	A-140	A-190	A-224
	5630	636	0.98	-	2200	9810	1	6125DB	Y		143	A-140	A-190	A-224
			1.23	I	3300	14700	1	6130DC	Y	A	143	A-142	A-192	A-226
			1.48	II	3300	14700	1	6135DC	Y	B	143	A-142	A-192	A-226
			1.93	III	3590	16000	1	6140DB	Y	C	143	A-142	A-192	A-226
8.79	4650	525	-	-	2200	9810	1	6120DB	Y		165	A-140	A-190	A-224
	6490	734	0.86	-	2200	9810	1	6125DB	Y		165	A-140	A-190	A-224
			1.06	I	3300	14700	1	6130DC	Y	A	165	A-142	A-192	A-226
			1.28	I	3300	14700	1	6135DC	Y	A	165	A-142	A-192	A-226
			1.67	III	3590	16000	1	6140DB	Y	C	165	A-142	A-192	A-226
			1.85	III	3590	16000	1	6145DB	Y	C	165	A-142	A-192	A-226
7.44	5570	630	-	-	2200	9810	1	6125DB	Y		195	A-140	A-190	A-224
	6900	780	-	-	3300	14700	1	6130DC	Y		195	A-142	A-192	A-226
	7670	867	1.08	I	3300	14700	1	6135DC	Y	A	195	A-142	A-192	A-226
			1.42	II	3590	16000	1	6140DB	Y	B	195	A-142	A-192	A-226
			1.57	II	3590	16000	1	6145DB	Y	B	195	A-142	A-192	A-226
			2.02	III	4960	22100	1	6160DC	Y	C	195	A-142	A-192	A-228
6.28	5570	630	-	-	2200	9810	1	6125DB	Y		231	A-140	A-190	A-224
	6900	780	-	-	3300	14700	1	6130DC	Y		231	A-142	A-192	A-226
	9110	1030	0.92	-	3300	14700	1	6135DC	Y		231	A-142	A-192	A-226
			1.19	I	3590	16000	1	6140DB	Y	A	231	A-142	A-192	A-226
			1.30	II	3590	16000	1	6145DB	Y	B	231	A-142	A-192	A-226
			1.71	III	4960	22100	1	6160DC	Y	C	231	A-142	A-192	A-228
			2.04	III	4960	22100	1	6165DC	Y	C	231	A-142	A-192	A-228
5.31	6900	780	-	-	3300	14700	1	6130DC	Y		273	A-142	A-192	A-226
	8320	940	-	-	3300	14700	1	6135DC	Y		273	A-142	A-192	A-226
	10700	1210	1.02	I	3590	16000	1	6140DB	Y	A	273	A-142	A-192	A-226
			1.10	I	3590	16000	1	6145DB	Y	A	273	A-142	A-192	A-226
			1.45	II	4960	22100	1	6160DC	Y	B	273	A-142	A-192	A-228
			1.73	III	4960	22100	1	6165DC	Y	C	273	A-142	A-192	A-228
			2.08	III	6620	29500	1	6170DC	Y	C	273	A-142	A-192	A-228
4.55	8320	940	-	-	3300	14700	1	6135DC	Y		319	A-142	A-192	A-226
	10900	1230	-	-	3480	15500	1	6140DB	Y		319	A-142	A-192	A-226
	12600	1420	0.97	-	3480	15500	1	6145DB	Y		319	A-142	A-192	A-226
			1.24	I	4960	22100	1	6160DC	Y	A	319	A-142	A-192	A-228
			1.48	II	4960	22100	1	6165DC	Y	B	319	A-142	A-192	A-228
			1.78	III	6620	29500	1	6170DC	Y	C	319	A-142	A-192	A-228

Notes: [1] Refer to Technical Information Section for R1 and R2 Model Overhung Load information.
[2] CNHM, CHHM, CNFM, CHFM, CNVM, CVVM are type designations, see page A-3.
[3] Refer to 60 Hz Selection Tables for inverter duty (AV) selections.
[4] For single phase dimensions, type CNHM, see page A-244; type CNVM, see page A-245.
[5] For type CVFM, single reduction, see page A-219; double reduction, see page A-240.

1 HP, 0.75 kW, 50 Hz[3], 1450 RPM

Output Speed	Output Torque		Service Factor		Overhung Load[1]		Selection					Dimension Page[2]		
RPM	in•lb	N•m	SF	AGMA Class	lb	N	HP Symbol	Frame Size	Shaft Spec.	AGMA Class	Ratio	CNHM CHHM[4]	CNVM CVVM[4]	CNFM CHFM[5]
3.85	10900	1230	-	-	3590	16000	1	6140DB	Y		377	A-142	A-192	A-226
	14900	1680	0.82	-	3170	14100	1	6145DB	Y		377	A-142	A-192	A-226
			1.05	I	4960	22100	1	6160DC	Y	A	377	A-142	A-192	A-228
			1.25	I	4960	22100	1	6165DC	Y	A	377	A-142	A-192	A-228
			1.51	II	6620	29500	1	6170DC	Y	B	377	A-142	A-192	A-228
			1.88	III	6620	29500	1	6175DC	Y	C	377	A-142	A-192	A-228
3.07	12100	1370	-	-	3530	15700	1	6145DB	Y		473	A-142	A-192	A-226
	15400	1740	-	-	4960	22100	1	6160DC	Y		473	A-142	A-192	A-228
	18600	2100	1.00	I	4960	22100	1	6165DC	Y	A	473	A-142	A-192	A-228
			1.20	I	6620	29500	1	6170DC	Y	A	473	A-142	A-192	A-228
			1.50	II	6620	29500	1	6175DC	Y	B	473	A-142	A-192	A-228
			1.93	III	9360	41700	1	6180DB	Y	C	473	A-142	A-192	A-230
2.59	15400	1740	-	-	4960	22100	1	6160DC	Y		559	A-142	A-192	A-228
	22000	2490	0.85	-	4960	22100	1	6165DC	Y		559	A-142	A-192	A-228
			1.02	I	6620	29500	1	6170DC	Y	A	559	A-142	A-192	A-228
			1.27	I	6620	29500	1	6175DC	Y	A	559	A-142	A-192	A-228
			1.63	III	9360	41700	1	6180DB	Y	C	559	A-142	A-192	A-230
			2.01	III	9360	41700	1	6185DB	Y	C	559	A-142	A-192	A-230
2.23	18600	2100	-	-	4960	22100	1	6165DC	Y		649	A-142	A-192	A-228
	22400	2530	-	-	6620	29500	1	6170DC	Y		649	A-142	A-192	A-228
	25600	2890	1.09	I	6620	29500	1	6175DC	Y	A	649	A-142	A-192	A-228
			1.40	II	9360	41700	1	6180DB	Y	B	649	A-142	A-192	A-230
			1.73	III	9360	41700	1	6185DB	Y	C	649	A-142	A-192	A-230
			2.21	III	13200	59000	1	6190DA	Y	C	649	A-142	A-192	A-230
1.98	18600	2100	-	-	4960	22100	1	6165DC	Y		731	A-142	A-192	A-228
	22400	2530	-	-	6620	29500	1	6170DC	Y		731	A-142	A-192	A-228
	28800	3250	0.97	-	6620	29500	1	6175DC	Y		731	A-142	A-192	A-228
			1.25	I	9360	41700	1	6180DB	Y	A	731	A-142	A-192	A-230
			1.54	II	9360	41700	1	6185DB	Y	B	731	A-142	A-192	A-230
			1.96	III	13200	59000	1	6190DA	Y	C	731	A-142	A-192	A-230
1.72	22400	2530	-	-	6620	29500	1	6170DC	Y		841	A-142	A-192	A-228
	33100	3740	0.84	-	6620	29500	1	6175DC	Y		841	A-142	A-192	A-228
			1.08	I	9360	41700	1	6180DB	Y	A	841	A-142	A-192	A-230
			1.34	II	9360	41700	1	6185DB	Y	B	841	A-142	A-192	A-230
			1.71	III	13200	59000	1	6190DA	Y	C	841	A-142	A-192	A-230
			2.13	III	13200	59000	1	6195DA	Y	C	841	A-142	A-192	A-230
1.45	27900	3150	-	-	6620	29500	1	6175DC	Y		1003	A-142	A-192	A-228
	35800	4050	-	-	9360	41700	1	6180DB	Y		1003	A-142	A-192	A-230
	39500	4460	1.12	I	9360	41700	1	6185DB	Y	A	1003	A-142	A-192	A-230
			1.43	II	13200	59000	1	6190DA	Y	B	1003	A-142	A-192	A-230
			1.79	III	13200	59000	1	6195DA	Y	C	1003	A-142	A-192	A-230
1.16	35900	4060	-	-	9360	41700	1	6180DB	Y		1247	A-142	A-192	A-230
	49000	5540	0.90	-	9360	41700	1	6185DB	Y		1247	A-142	A-192	A-230
			1.15	I	13200	59000	1	6190DA	Y	A	1247	A-142	A-192	A-230
			1.44	II	13200	59000	1	6195DA	Y	B	1247	A-142	A-192	A-230

Notes: [1] Refer to Technical Information Section for R1 and R2 Model Overhung Load information.
[2] CNHM, CHHM, CNFM, CHFM, CNVM, CVVM are type designations, see page A-3.
[3] Refer to 60 Hz Selection Tables for inverter duty (AV) selections.
[4] For single phase dimensions, type CNHM, see page A-244; type CNVM, see page A-245.
[5] For type CVFM, single reduction, see page A-219; double reduction, see page A-240.

SELECTION TABLES – 50 Hz

1 HP, 0.75 kW, 50 Hz[3], 1450 RPM

Output Speed	Output Torque		Service Factor		Overhung Load[1]		Selection					Dimension Page[2]		
RPM	in•lb	N•m	SF	AGMA Class	lb	N	HP Symbol	Frame Size	Shaft Spec.	AGMA Class	Ratio	CNHM CHHM[4]	CNVM CVVM[4]	CNFM CHFM[5]
0.980	35900	4060	-	-	9360	41700	1	6180DB	Y		1479	A-142	A-192	A-230
	44200	5000	-	-	9360	41700	1	6185DB	Y		1479	A-142	A-192	A-230
	56500	6380	-	-	13200	58800	1	6190DA	Y		1479	A-142	A-192	A-230
	58200	6580	1.21	I	13200	58800	1	6195DA	Y	A	1479	A-142	A-192	A-230
0.784	44200	5000	-	-	9360	41700	1	6185DB	Y		1849	A-142	A-192	A-230
	56500	6380	-	-	13200	59000	1	6190DA	Y		1849	A-142	A-192	A-230
	72700	8220	0.97	-	13200	58900	1	6195DA	Y		1849	A-142	A-192	A-230
0.702	44200	5000	-	-	9340	41600	1	6185DB	Y		2065	A-142	A-192	A-230
	56500	6380	-	-	13200	58600	1	6190DA	Y		2065	A-142	A-192	A-230
	81200	9180	0.87	-	13000	57800	1	6195DA	Y		2065	A-142	A-192	A-230
0.572	56500	6380	-	-	13200	58600	1	6190DA	Y		2537	A-142	A-192	A-230
	70400	7960	-	-	13000	58100	1	6195DA	Y		2537	A-142	A-192	A-230
	100000	11300	0.82	-	18900	84100	1	6205DA	Y		2537	A-146	A-196	A-232
0.476	56500	6380	-	-	13200	58900	1	6190DA	Y		3045	A-142	A-192	A-230
	70400	7960	-	-	13100	58400	1	6195DA	Y		3045	A-142	A-192	A-230
	77500	8760	-	-	18900	84100	1	6205DA	Y		3045	A-146	A-196	A-232
0.417	56500	6380	-	-	13200	58600	1	6190DA	Y		3481	A-142	A-192	A-230
	70400	7960	-	-	13000	58100	1	6195DA	Y		3481	A-142	A-192	A-230
	82300	9300	-	-	18900	84100	1	6205DA	Y		3481	A-146	A-196	A-232
0.327	56500	6380	-	-	13200	58900	1	6190DA	Y		4437	A-142	A-192	A-230
	70400	7960	-	-	13100	58400	1	6195DA	Y		4437	A-142	A-192	A-230
	77500	8760	-	-	18900	84100	1	6205DA	Y		4437	A-146	A-196	A-232
0.282	56500	6380	-	-	13200	58900	1	6190DA	Y		5133	A-142	A-192	A-230
	70400	7960	-	-	13100	58400	1	6195DA	Y		5133	A-142	A-192	A-230
	82300	9300	-	-	18900	84100	1	6205DA	Y		5133	A-146	A-196	A-232
0.235	56500	6380	-	-	13200	58900	1	6190DA	Y		6177	A-142	A-192	A-230
	70400	7960	-	-	13100	58400	1	6195DA	Y		6177	A-142	A-192	A-230
	77500	8760	-	-	18900	84100	1	6205DA	Y		6177	A-146	A-196	A-232
0.192	56500	6380	-	-	13200	58900	1	6190DA	Y		7569	A-142	A-192	A-230
	70400	7960	-	-	13100	58400	1	6195DA	Y		7569	A-142	A-192	A-230
	77500	8760	-	-	18900	84100	1	6205DA	Y		7569	A-146	A-196	A-232

Notes: [1] Refer to Technical Information Section for R1 and R2 Model Overhung Load information.
[2] CNHM, CHHM, CNFM, CHFM, CNVM, CVVM are type designations, see page A-3.
[3] Refer to 60 Hz Selection Tables for inverter duty (AV) selections.
[4] For single phase dimensions, type CNHM, see page A-244; type CNVM, see page A-245.
[5] For type CVFM, single reduction, see page A-219; double reduction, see page A-240.

1.5 HP, 1.1 kW, 50 Hz[3], 1450 RPM

Output Speed	Output Torque		Service Factor		Overhung Load[1]		Selection					Dimension Page[2]		
RPM	in•lb	N•m	SF	AGMA Class	lb	N	HP Symbol	Frame Size	Shaft Spec.	AGMA Class	Ratio	CNHM CHHM[4]	CNVM CVVM[4]	CNFM CHFM[5]
242	365	41.3	1.05	I	633	2820	1H	6090	Y	A	6	A-122	A-176	A-204
			1.38	II	633	2820	1H	6095	Y	B	6	A-122	A-176	A-204
			2.14	III	930	4140	1H	6100	Y	C	6	A-122	A-176	A-204
181	488	55.1	1.05	I	703	3130	1H	6090	Y	A	8	A-122	A-176	A-204
			1.38	II	703	3130	1H	6095	Y	B	8	A-122	A-176	A-204
			2.14	III	1040	4620	1H	6100	Y	C	8	A-122	A-176	A-204
132	670	75.7	1.05	I	750	3340	1H	6090	Y	A	11	A-122	A-176	A-204
			1.38	II	750	3340	1H	6095	Y	B	11	A-122	A-176	A-204
			2.14	III	1180	5250	1H	6100	Y	C	11	A-122	A-176	A-204
112	792	89.5	1.05	I	750	3340	1H	6090	Y	A	13	A-122	A-176	A-204
			1.38	II	750	3340	1H	6095	Y	B	13	A-122	A-176	A-204
			2.14	III	1210	5400	1H	6100	Y	C	13	A-122	A-176	A-204
96.7	911	103	1.05	I	750	3340	1H	6090	Y	A	15	A-122	A-176	A-204
			1.38	II	750	3340	1H	6095	Y	B	15	A-122	A-176	A-204
			2.14	III	1210	5400	1H	6100	Y	C	15	A-122	A-176	A-204
85.3	1040	117	1.05	I	750	3340	1H	6090	Y	A	17	A-122	A-176	A-204
			1.38	II	750	3340	1H	6095	Y	B	17	A-122	A-176	A-204
			1.81	III	1210	5400	1H	6100	Y	C	17	A-122	A-176	A-204
69.0	1280	145	1.37	II	750	3340	1H	6095	Y	B	21	A-122	A-176	A-204
			1.73	III	1210	5400	1H	6100	Y	C	21	A-122	A-176	A-204
			2.07	III	1210	5400	1H	6105	Y	C	21	A-122	A-176	A-204
58.0	1520	172	1.15	I	1210	5400	1H	6100	Y	A	25	A-122	A-176	A-204
			1.52	II	1210	5400	1H	6105	Y	B	25	A-122	A-176	A-204
			1.74	III	1610	7180	1H	6110	Y	C	25	A-126	A-176	A-204
			2.02	III	1610	7180	1H	6115	Y	C	25	A-126	A-176	A-204
50.0	1770	200	1.10	I	1210	5400	1H	6100	Y	A	29	A-122	A-176	A-204
			1.45	II	1210	5400	1H	6105	Y	B	29	A-122	A-176	A-204
			1.73	III	1650	7350	1H	6110	Y	C	29	A-126	A-176	A-204
			2.02	III	1650	7350	1H	6115	Y	C	29	A-126	A-176	A-204
41.4	2130	241	1.09	I	1210	5400	1H	6105	Y	A	35	A-122	A-176	A-204
			1.36	II	1660	7400	1H	6110	Y	B	35	A-126	A-176	A-204
			1.65	III	1660	7400	1H	6115	Y	C	35	A-126	A-176	A-204
			2.15	III	2150	9560	1H	6120	Y	C	35	A-126	A-176	A-204
33.7	2620	296	0.98	-	1210	5400	1H	6105	Y		43	A-122	A-176	A-204
			1.18	I	1710	7610	1H	6110	Y	A	43	A-126	A-176	A-204
			1.38	II	1710	7610	1H	6115	Y	B	43	A-126	A-176	A-204
			1.74	III	2200	9810	1H	6120	Y	C	43	A-126	A-176	A-204
			2.13	III	2200	9810	1H	6125	Y	C	43	A-126	A-176	A-204
28.4	3110	351	1.01	I	1710	7600	1H	6115	Y	A	51	A-126	A-176	A-204
			1.48	II	2200	9810	1H	6120	Y	B	51	A-126	A-176	A-204
			1.79	III	2200	9810	1H	6125	Y	C	51	A-126	A-176	A-204
24.6	3590	406	0.92	-	1700	7570	1H	6115	Y		59	A-126	A-176	A-204
			1.18	I	2200	9810	1H	6120	Y	A	59	A-126	A-176	A-204
			1.47	II	2200	9810	1H	6125	Y	B	59	A-126	A-176	A-204
			1.92	III	2940	13100	1H	6130	Y	C	59	A-128	A-180	A-208
20.4	4330	489	1.04	I	2200	9810	1H	6125	Y	A	71	A-126	A-176	A-204
			1.60	III	3120	13900	1H	6130	Y	C	71	A-128	A-180	A-208
			1.85	III	3120	13900	1H	6135	Y	C	71	A-128	A-180	A-208

Notes: [1] Refer to Technical Information Section for R1 and R2 Model Overhung Load information.
[2] CNHM, CHHM, CNFM, CHFM, CNVM, CVVM are type designations, see page A-3.
[3] Refer to 60 Hz Selection Tables for inverter duty (AV) selections.
[4] For single phase dimensions, type CNHM, see page A-244; type CNVM, see page A-245.
[5] For type CVFM, single reduction, see page A-219; double reduction, see page A-240.

SELECTION TABLES – 50 Hz

1.5 HP, 1.1 kW, 50 Hz[3], 1450 RPM

Output Speed	Output Torque		Service Factor		Overhung Load[1]		Selection					Dimension Page[2]		
RPM	in•lb	N•m	SF	AGMA Class	lb	N	HP Symbol	Frame Size	Shaft Spec.	AGMA Class	Ratio	CNHM CHHM[4]	CNVM CVVM[4]	CNFM CHFM[5]
16.7	5300	599	0.94	-	2160	9620	1H	6125	Y		87	A-126	A-176	A-204
			1.29	I	3300	14700	1H	6130	Y	A	87	A-128	A-180	A-208
			1.50	II	3300	14700	1H	6135	Y	B	87	A-128	A-180	A-208
			1.80	III	3590	16000	1H	6140	Y	C	87	A-128	A-180	A-208
13.9	4650	525	-	-	2200	9810	1H	6120DB	Y		104	A-140	A-190	A-224
	6000	678	0.93	-	2200	9810	1H	6125DB	Y		104	A-140	A-190	A-224
			1.15	I	3300	14700	1H	6130DC	Y	A	104	A-142	A-192	A-226
			1.39	II	3300	14700	1H	6135DC	Y	B	104	A-142	A-192	A-226
			1.45	II	3590	16000	1H	6140DB	Y	B	104	A-142	A-192	A-226
12.0	4650	525	-	-	2200	9810	1H	6120DB	Y		121	A-140	A-190	A-224
	5500	622	-	-	2200	9810	1H	6125DB	Y		121	A-140	A-190	A-224
	6900	780	-	-	3300	14700	1H	6130DC	Y		121	A-142	A-192	A-226
	6980	789	1.19	I	3300	14700	1H	6135DC	Y	A	121	A-142	A-192	A-226
			1.45	II	3590	16000	1H	6140DB	Y	B	121	A-142	A-192	A-226
			2.22	III	4960	22100	1H	6160DC	Y	C	121	A-142	A-192	A-228
10.1	5570	630	-	-	2200	9810	1H	6125DB	Y		143	A-140	A-190	A-224
	6900	780	-	-	3300	14700	1H	6130DC	Y		143	A-142	A-192	A-226
	8250	932	1.01	I	3300	14700	1H	6135DC	Y	A	143	A-142	A-192	A-226
			1.31	II	3590	16000	1H	6140DB	Y	B	143	A-142	A-192	A-226
			1.46	II	3590	16000	1H	6145DB	Y	B	143	A-142	A-192	A-226
			1.88	III	4960	22100	1H	6160DC	Y	C	143	A-142	A-192	A-228
8.79	5570	630	-	-	2200	9810	1H	6125DB	Y		165	A-140	A-190	A-224
	6900	780	-	-	3300	14700	1H	6130DC	Y		165	A-142	A-192	A-226
	9560	1080	0.87	-	3300	14700	1H	6135DC	Y		165	A-142	A-192	A-226
			1.14	I	3590	16000	1H	6140DB	Y	A	165	A-142	A-192	A-226
			1.26	I	3590	16000	1H	6145DB	Y	A	165	A-142	A-192	A-226
			1.63	III	4960	22100	1H	6160DC	Y	C	165	A-142	A-192	A-228
			1.95	III	4960	22100	1H	6165DC	Y	C	165	A-142	A-192	A-228
7.44	6900	780	-	-	3300	14700	1H	6130DC	Y		195	A-142	A-192	A-226
	8320	940	-	-	3300	14700	1H	6135DC	Y		195	A-142	A-192	A-226
	11200	1270	1.07	I	3590	16000	1H	6145DB	Y	A	195	A-142	A-192	A-226
			1.38	II	4960	22100	1H	6160DC	Y	B	195	A-142	A-192	A-228
			1.65	III	4960	22100	1H	6165DC	Y	C	195	A-142	A-192	A-228
			1.99	III	6620	29500	1H	6170DC	Y	C	195	A-142	A-192	A-228
6.28	8320	940	-	-	3300	14700	1H	6135DC	Y		231	A-142	A-192	A-226
	10900	1230	-	-	3590	16000	1H	6140DB	Y		231	A-142	A-192	A-226
	13400	1510	0.89	-	3480	15500	1H	6145DB	Y		231	A-142	A-192	A-226
			1.17	I	4960	22100	1H	6160DC	Y	A	231	A-142	A-192	A-228
			1.39	II	4960	22100	1H	6165DC	Y	B	231	A-142	A-192	A-228
			1.68	III	6620	29500	1H	6170DC	Y	C	231	A-142	A-192	A-228
			2.09	III	6620	29500	1H	6175DC	Y	C	231	A-142	A-192	A-228

Notes: [1] Refer to Technical Information Section for R1 and R2 Model Overhung Load information.
[2] CNHM, CHHM, CNFM, CHFM, CNVM, CVVM are type designations, see page A-3.
[3] Refer to 60 Hz Selection Tables for inverter duty (AV) selections.
[4] For single phase dimensions, type CNHM, see page A-244; type CNVM, see page A-245.
[5] For type CVFM, single reduction, see page A-219; double reduction, see page A-240.

1.5 HP, 1.1 kW, 50 Hz[3], 1450 RPM

Output Speed	Output Torque		Service Factor		Overhung Load[1]		Selection					Dimension Page[2]		
RPM	in•lb	N•m	SF	AGMA Class	lb	N	HP Symbol	Frame Size	Shaft Spec.	AGMA Class	Ratio	CNHM CHHM[4]	CNVM CVVM[4]	CNFM CHFM[5]
5.31	10900	1230	-	-	3590	16000	1H	6140DB	Y		273	A-142	A-192	A-226
	11900	1340	-	-	3590	16000	1H	6145DB	Y		273	A-142	A-192	A-226
	15600	1760	-	-	4960	22100	1H	6160DC	Y		273	A-142	A-192	A-228
	15700	1780	1.18	I	4960	22100	1H	6165DC	Y	A	273	A-142	A-192	A-228
			1.42	II	6620	29500	1H	6170DC	Y	B	273	A-142	A-192	A-228
			1.77	III	6620	29500	1H	6175DC	Y	C	273	A-142	A-192	A-228
4.55	10900	1230	-	-	3590	16000	1H	6140DB	Y		319	A-142	A-192	A-226
	12100	1370	-	-	3550	15800	1H	6145DB	Y		319	A-142	A-192	A-226
	15600	1760	-	-	4960	22100	1H	6160DC	Y		319	A-142	A-192	A-228
	18400	2080	1.01	I	4960	22100	1H	6165DC	Y	A	319	A-142	A-192	A-228
			1.22	I	6620	29500	1H	6170DC	Y	A	319	A-142	A-192	A-228
			1.51	II	6620	29500	1H	6175DC	Y	B	319	A-142	A-192	A-228
			1.95	III	9360	41700	1H	6180DB	Y	C	319	A-142	A-192	A-230
3.85	15600	1760	-	-	4960	22100	1H	6160DC	Y		377	A-142	A-192	A-228
	21800	2460	0.85	-	4960	22100	1H	6165DC	Y		377	A-142	A-192	A-228
			1.03	I	6620	29500	1H	6170DC	Y	A	377	A-142	A-192	A-228
			1.28	I	6620	29500	1H	6175DC	Y	A	377	A-142	A-192	A-228
			1.65	III	9360	41700	1H	6180DB	Y	C	377	A-142	A-192	A-230
			2.03	III	9360	41700	1H	6185DB	Y	C	377	A-142	A-192	A-230
3.07	18600	2100	-	-	4960	22100	1H	6165DC	Y		473	A-142	A-192	A-228
	22400	2530	-	-	6620	29500	1H	6170DC	Y		473	A-142	A-192	A-228
	27300	3080	1.02	I	6620	29500	1H	6175DC	Y	A	473	A-142	A-192	A-228
			1.32	II	9360	41700	1H	6180DB	Y	B	473	A-142	A-192	A-230
			1.62	III	9360	41700	1H	6185DB	Y	C	473	A-142	A-192	A-230
			2.07	III	13200	59000	1H	6190DA	Y	C	473	A-142	A-192	A-230
2.59	18600	2100	-	-	4960	22100	1H	6165DC	Y		559	A-142	A-192	A-228
	22400	2530	-	-	6620	29500	1H	6170DC	Y		559	A-142	A-192	A-228
	32200	3640	0.86	-	6620	29500	1H	6175DC	Y		559	A-142	A-192	A-228
			1.11	I	9360	41700	1H	6180DB	Y	A	559	A-142	A-192	A-230
			1.37	II	9360	41700	1H	6185DB	Y	B	559	A-142	A-192	A-230
			1.75	III	13200	59000	1H	6190DA	Y	C	559	A-142	A-192	A-230
2.23	22400	2530	-	-	6620	29500	1H	6170DC	Y		649	A-142	A-192	A-228
	27900	3150	-	-	6620	29500	1H	6175DC	Y		649	A-142	A-192	A-228
	35800	4050	-	-	9360	41700	1H	6180DB	Y		649	A-142	A-192	A-230
	37400	4230	1.18	I	9360	41700	1H	6185DB	Y	A	649	A-142	A-192	A-230
			1.51	II	13200	59000	1H	6190DA	Y	B	649	A-142	A-192	A-230
			1.88	III	13200	59000	1H	6195DA	Y	C	649	A-142	A-192	A-230
1.98	27900	3150	-	-	6620	29500	1H	6175DC	Y		731	A-142	A-192	A-228
	35900	4060	-	-	9360	41700	1H	6180DB	Y		731	A-142	A-192	A-230
	42200	4770	1.05	I	9360	41700	1H	6185DB	Y	A	731	A-142	A-192	A-230
			1.34	II	13200	59000	1H	6190DA	Y	B	731	A-142	A-192	A-230
			1.67	III	13200	59000	1H	6195DA	Y	C	731	A-142	A-192	A-230

Notes: [1] Refer to Technical Information Section for R1 and R2 Model Overhung Load information.
[2] CNHM, CHHM, CNFM, CHFM, CNVM, CVVM are type designations, see page A-3.
[3] Refer to 60 Hz Selection Tables for inverter duty (AV) selections.
[4] For single phase dimensions, type CNHM, see page A-244; type CNVM, see page A-245.
[5] For type CVFM, single reduction, see page A-219; double reduction, see page A-240.

SELECTION TABLES – 50 Hz

1.5 HP, 1.1 kW, 50 Hz[3], 1450 RPM

Output Speed	Output Torque		Service Factor		Overhung Load[1]		Selection					Dimension Page[2]		
RPM	in•lb	N•m	SF	AGMA Class	lb	N	HP Symbol	Frame Size	Shaft Spec.	AGMA Class	Ratio	CNHM CHHM[4]	CNVM CVVM[4]	CNFM CHFM[5]
1.72	27900	3150	-	-	6620	29500	1H	6175DC	Y		841	A-142	A-192	A-228
	35800	4050	-	-	9360	41700	1H	6180DB	Y		841	A-142	A-192	A-230
	48500	5480	0.91	-	9360	41700	1H	6185DB	Y		841	A-142	A-192	A-230
			1.16	I	13200	59000	1H	6190DA	Y	A	841	A-142	A-192	A-230
			1.45	II	13200	59000	1H	6195DA	Y	B	841	A-142	A-192	A-230
1.45	35800	4050	-	-	9360	41700	1H	6180DB	Y		1003	A-142	A-192	A-230
	44200	5000	-	-	9340	41600	1H	6185DB	Y		1003	A-142	A-192	A-230
	56500	6380	-	-	13100	58500	1H	6190DA	Y		1003	A-142	A-192	A-230
	57900	6540	1.22	I	13100	58500	1H	6195DA	Y	A	1003	A-142	A-192	A-230
1.16	44200	5000	-	-	9360	41700	1H	6185DB	Y		1247	A-142	A-192	A-230
	56500	6380	-	-	13200	59000	1H	6190DA	Y		1247	A-142	A-192	A-230
	71900	8130	0.98	-	13200	58900	1H	6195DA	Y		1247	A-142	A-192	A-230
0.980	56500	6380	-	-	13200	58900	1H	6190DA	Y		1479	A-142	A-192	A-230
	85300	9640	0.83	-	13000	57800	1H	6195DA	Y		1479	A-142	A-192	A-230
0.784	70400	7960	-	-	13200	59000	1H	6195DA	Y		1849	A-142	A-192	A-230
0.702	70400	7960	-	-	13000	58100	1H	6195DA	Y		2065	A-142	A-192	A-230

2 HP, 1.5 kW, 50 Hz[3], 1450 RPM

Output Speed	Output Torque		Service Factor		Overhung Load[1]		Selection					Dimension Page[2]		
RPM	in•lb	N•m	SF	AGMA Class	lb	N	HP Symbol	Frame Size	Shaft Spec.	AGMA Class	Ratio	CNHM CHHM[4]	CNVM CVVM[4]	CNFM CHFM[5]
242	498	56.3	1.01	I	626	2790	2	6095	Y	A	6	A-122	A-176	A-224
			1.57	II	927	4130	2	6100	Y	B	6	A-122	A-176	A-224
			2.12	III	927	4130	2	6105	Y	C	6	A-122	A-176	A-224
181	664	75.1	1.01	I	694	3090	2	6095	Y	A	8	A-122	A-176	A-224
			1.57	II	1030	4600	2	6100	Y	B	8	A-122	A-176	A-224
			2.12	III	1030	4600	2	6105	Y	C	8	A-122	A-176	A-224
132	911	103	1.01	I	750	3340	2	6095	Y	A	11	A-122	A-176	A-224
			1.57	II	1170	5220	2	6100	Y	B	11	A-122	A-176	A-224
			2.12	III	1170	5220	2	6105	Y	C	11	A-122	A-176	A-224
112	1080	122	1.01	I	750	3340	2	6095	Y	A	13	A-122	A-176	A-224
			1.57	II	1210	5400	2	6100	Y	B	13	A-122	A-176	A-224
			2.12	III	1210	5400	2	6105	Y	C	13	A-122	A-176	A-224
96.7	1250	141	1.01	I	750	3340	2	6095	Y	A	15	A-122	A-176	A-224
			1.57	II	1210	5400	2	6100	Y	B	15	A-122	A-176	A-224
			2.12	III	1210	5400	2	6105	Y	C	15	A-122	A-176	A-224
85.3	1420	160	1.01	I	750	3340	2	6095	Y	A	17	A-122	A-176	A-224
			1.33	II	1210	5400	2	6100	Y	B	17	A-122	A-176	A-224
			1.64	III	1210	5400	2	6105	Y	C	17	A-122	A-176	A-224
			2.12	III	1490	6620	2	6110	Y	C	17	A-126	A-176	A-224
69.0	1740	197	1.01	I	750	3340	2	6095	Y	A	21	A-122	A-176	A-224
			1.52	II	1210	5400	2	6105	Y	B	21	A-122	A-176	A-224
			1.81	III	1580	7020	2	6110	Y	C	21	A-126	A-176	A-224

Notes: [1] Refer to Technical Information Section for R1 and R2 Model Overhung Load information.
[2] CNHM, CHHM, CNFM, CHFM, CNVM, CVVM are type designations, see page A-3.
[3] Refer to 60 Hz Selection Tables for inverter duty (AV) selections.
[4] For single phase dimensions, type CNHM, see page A-244; type CNVM, see page A-245.
[5] For type CVFM, single reduction, see page A-219; double reduction, see page A-240.

2 HP, 1.5 kW, 50 Hz[3], 1450 RPM

Output Speed	Output Torque		Service Factor		Overhung Load[1]		Selection					Dimension Page[2]		
RPM	in•lb	N•m	SF	AGMA Class	lb	N	HP Symbol	Frame Size	Shaft Spec.	AGMA Class	Ratio	CNHM CHHM[4]	CNVM CVVM[4]	CNFM CHFM[5]
58.0	2080	235	1.11	I	1210	5400	2	6105	Y	A	25	A-122	A-176	A-204
			1.48	II	1600	7120	2	6115	Y	B	25	A-126	A-176	A-204
			2.06	III	1940	8650	2	6120	Y	C	25	A-126	A-176	A-204
50.0	2410	272	1.06	I	1210	5400	2	6105	Y	A	29	A-122	A-176	A-204
			1.48	II	1640	7290	2	6115	Y	B	29	A-126	A-176	A-204
			1.91	III	2020	8990	2	6120	Y	C	29	A-126	A-176	A-204
41.4	2900	328	1.21	I	1640	7310	2	6115	Y	A	35	A-126	A-176	A-204
			1.58	II	2130	9490	2	6120	Y	B	35	A-126	A-176	A-204
			1.92	III	2130	9490	2	6125	Y	C	35	A-126	A-176	A-204
33.7	3570	404	1.01	I	1690	7540	2	6115	Y	A	43	A-126	A-176	A-204
			1.56	II	2200	9810	2	6125	Y	B	43	A-126	A-176	A-204
			1.93	III	2670	11900	2	6130	Y	C	43	A-128	A-180	A-208
28.4	4240	479	1.09	I	2200	9810	2	6120	Y	A	51	A-126	A-176	A-204
			1.31	II	2200	9810	2	6125	Y	B	51	A-126	A-176	A-204
			1.70	III	2780	12400	2	6135	Y	C	51	A-128	A-180	A-208
			2.29	III	3590	16000	2	6140	Y	C	51	A-128	A-180	A-208
24.6	4900	554	1.08	I	2200	9810	2	6125	Y	A	59	A-126	A-176	A-204
			1.41	II	2920	13000	2	6130	Y	B	59	A-128	A-180	A-208
			1.63	III	2920	13000	2	6135	Y	C	59	A-128	A-180	A-208
			1.97	III	3590	16000	2	6140	Y	C	59	A-128	A-180	A-208
20.4	5890	666	1.17	I	3080	13700	2	6130	Y	A	71	A-128	A-180	A-208
			1.35	II	3080	13700	2	6135	Y	B	71	A-128	A-180	A-208
			1.62	III	3590	16000	2	6140	Y	C	71	A-128	A-180	A-208
			1.75	III	3590	16000	2	6145	Y	C	71	A-128	A-180	A-208
16.7	7230	817	1.10	I	3300	14700	2	6135	Y	A	87	A-128	A-180	A-208
			1.44	II	3590	16000	2	6145	Y	B	87	A-128	A-180	A-208
			2.15	III	4960	22100	2	6160	Y	C	87	A-128	A-180	A-208
13.9	5570	630	-	-	2200	9810	2	6125DB	Y		104	A-140	A-190	A-224
	8185	925	1.02	I	3300	14700	2	6135DC	Y	A	104	A-142	A-192	A-226
			1.24	I	3590	16000	2	6140DB	Y	A	104	A-142	A-192	A-226
			1.90	III	4960	22100	2	6160DC	Y	C	104	A-142	A-192	A-228
12.0	6900	780	-	-	3300	14700	2	6130DC	Y		121	A-142	A-192	A-226
	9560	1080	0.87	-	3300	14700	2	6135DC	Y		121	A-142	A-192	A-226
			1.07	I	3590	16000	2	6140DB	Y	A	121	A-142	A-192	A-226
			1.63	III	4960	22100	2	6160DC	Y	C	121	A-142	A-192	A-228
			1.95	III	4960	22100	2	6165DC	Y	C	121	A-142	A-192	A-228
10.1	6900	780	-	-	3300	14700	2	6130DC	Y		143	A-142	A-192	A-226
	8320	940	-	-	3300	14700	2	6135DC	Y		143	A-142	A-192	A-226
	11200	1270	1.07	I	3590	16000	2	6145DB	Y	A	143	A-142	A-192	A-226
			1.38	II	4960	22100	2	6160DC	Y	B	143	A-142	A-192	A-228
			1.65	III	4960	22100	2	6165DC	Y	C	143	A-142	A-192	A-228
			1.99	III	6620	29500	2	6170DC	Y	C	143	A-142	A-192	A-228

Notes: [1] Refer to Technical Information Section for R1 and R2 Model Overhung Load information.
[2] CNHM, CHHM, CNFM, CHFM, CNVM, CVVM are type designations, see page A-3.
[3] Refer to 60 Hz Selection Tables for inverter duty (AV) selections.
[4] For single phase dimensions, type CNHM, see page A-244; type CNVM, see page A-245.
[5] For type CVFM, single reduction, see page A-219; double reduction, see page A-240.

SELECTION TABLES – 50 Hz

2 HP, 1.5 kW, 50 Hz[3], 1450 RPM

Output Speed	Output Torque		Service Factor		Overhung Load[1]		Selection					Dimension Page[2]		
RPM	in•lb	N•m	SF	AGMA Class	lb	N	HP Symbol	Frame Size	Shaft Spec.	AGMA Class	Ratio	CNHM CHHM[4]	CNVM CVVM[4]	CNFM CHFM[5]
8.79	8320	940	-	-	3300	14700	2	6135DC	Y		165	A-142	A-192	A-226
	13000	1470	0.93	-	3590	16000	2	6145DB	Y		165	A-142	A-192	A-226
			1.20	I	4960	22100	2	6160DC	Y	A	165	A-142	A-192	A-228
			1.43	II	4960	22100	2	6165DC	Y	B	165	A-142	A-192	A-228
			1.72	III	6620	29500	2	6170DC	Y	C	165	A-142	A-192	A-228
			2.15	III	6620	29500	2	6175DC	Y	C	165	A-142	A-192	A-228
7.44	10900	1230	-	-	3590	16000	2	6140DB	Y		195	A-142	A-192	A-226
	12000	1360	-	-	3590	16000	2	6145DB	Y		195	A-142	A-192	A-226
	15300	1730	1.01	I	4960	22100	2	6160DC	Y	A	195	A-142	A-192	A-228
			1.46	II	6620	29500	2	6170DC	Y	B	195	A-142	A-192	A-228
			1.82	III	6620	29500	2	6175DC	Y	C	195	A-142	A-192	A-228
6.28	11900	1340	-	-	3590	16000	2	6145DB	Y		231	A-142	A-192	A-226
	18100	2050	1.02	I	4960	22100	2	6165DC	Y	A	231	A-142	A-192	A-228
			1.53	II	6620	29500	2	6175DC	Y	B	231	A-142	A-192	A-228
			1.97	III	9360	41700	2	6180DB	Y	C	231	A-142	A-192	A-230
5.31	15600	1760	-	-	4960	22100	2	6160DC	Y		273	A-142	A-192	A-228
	21500	2430	0.87	-	4960	22100	2	6165DC	Y		273	A-142	A-192	A-228
			1.04	I	6620	29500	2	6170DC	Y	A	273	A-142	A-192	A-228
			1.30	II	6620	29500	2	6175DC	Y	B	273	A-142	A-192	A-228
			1.67	III	9360	41700	2	6180DB	Y	C	273	A-142	A-192	A-230
			2.06	III	9360	41700	2	6185DB	Y	C	273	A-142	A-192	A-230
4.55	15600	1760	-	-	4960	22100	2	6160DC	Y		319	A-142	A-192	A-228
	18600	2100	-	-	4960	22100	2	6165DC	Y		319	A-142	A-192	A-228
	25100	2840	1.11	I	6620	29500	2	6175DC	Y	A	319	A-142	A-192	A-228
			1.43	II	9360	41700	2	6180DB	Y	B	319	A-142	A-192	A-230
			1.76	III	9360	41700	2	6185DB	Y	C	319	A-142	A-192	A-230
3.85	18600	2100	-	-	4960	22100	2	6165DC	Y		377	A-142	A-192	A-228
	22400	2530	-	-	6620	29500	2	6170DC	Y		377	A-142	A-192	A-228
	29600	3350	0.94	-	6620	29500	2	6175DC	Y		377	A-142	A-192	A-228
			1.21	I	9360	41700	2	6180DB	Y	A	377	A-142	A-192	A-230
			1.49	II	9360	41700	2	6185DB	Y	B	377	A-142	A-192	A-230
			1.90	III	13200	59000	2	6190DA	Y	C	377	A-142	A-192	A-230
3.07	27900	3150	-	-	6620	29500	2	6175DC	Y		473	A-142	A-192	A-228
	37300	4210	1.19	I	9360	41700	2	6185DB	Y	A	473	A-142	A-192	A-230
			1.52	II	13200	59000	2	6190DA	Y	B	473	A-142	A-192	A-230
			1.89	III	13200	59000	2	6195DA	Y	C	473	A-142	A-192	A-230

Notes: [1] Refer to Technical Information Section for R1 and R2 Model Overhung Load information.
[2] CNHM, CHHM, CNFM, CHFM, CNVM, CVVM are type designations, see page A-3.
[3] Refer to 60 Hz Selection Tables for inverter duty (AV) selections.
[4] For single phase dimensions, type CNHM, see page A-244; type CNVM, see page A-245.
[5] For type CVFM, single reduction, see page A-219; double reduction, see page A-240.

2 HP, 1.5 kW, 50 Hz[3], 1450 RPM

Output Speed	Output Torque		Service Factor		Overhung Load[1]		Selection					Dimension Page[2]		
RPM	in•lb	N•m	SF	AGMA Class	lb	N	HP Symbol	Frame Size	Shaft Spec.	AGMA Class	Ratio	CNHM CHHM[4]	CNVM CVVM[4]	CNFM CHFM[5]
2.59	27900	3150	-	-	6620	29500	2	6175DC	Y		559	A-142	A-192	A-228
	35900	4060	-	-	9360	41700	2	6180DB	Y		559	A-142	A-192	A-230
	44000	4970	1.01	I	9360	41700	2	6185DB	Y	A	559	A-142	A-192	A-230
			1.60	III	13200	59000	2	6195DA	Y	C	559	A-142	A-192	A-230
2.23	35800	4050	-	-	9360	41700	2	6180DB	Y		649	A-142	A-192	A-230
	51100	5770	0.87	-	9340	41600	2	6185DB	Y		649	A-142	A-192	A-230
			1.11	I	13200	58700	2	6190DA	Y	A	649	A-142	A-192	A-230
			1.38	II	13200	58700	2	6195DA	Y	B	649	A-142	A-192	A-230
1.98	35900	4060	-	-	9360	41700	2	6180DB	Y		731	A-142	A-192	A-230
	44200	5000	-	-	9360	41700	2	6185DB	Y		731	A-142	A-192	A-230
	57500	6500	1.22	I	13200	59000	2	6195DA	Y	A	731	A-142	A-192	A-230
1.72	44200	5000	-	-	9360	41700	2	6185DB	Y		841	A-142	A-192	A-230
	66200	7480	1.06	I	13200	59000	2	6195DA	Y	A	841	A-142	A-192	A-230
1.45	56500	6380	-	-	13200	58600	2	6190DA	Y		1003	A-142	A-192	A-230
	78900	8920	0.89	-	13000	57900	2	6195DA	Y		1003	A-142	A-192	A-230
1.16	70400	7960	-	-	13200	59000	2	6195DA	Y		1247	A-142	A-192	A-230
0.980	77500	8760	-	-	18900	84100	2	6205DA	Y		1479	A-146	A-196	A-232
	117000	13200	0.86	-	23400	104000	2	6215DA	Y		1479	A-146	A-196	A-232
0.784	82300	9300	-	-	18900	84100	2	6205DA	Y		1849	A-146	A-196	A-232
	112000	12700	-	-	23400	104000	2	6215DA	Y		1849	A-146	A-196	A-232
	145000	16400	0.97	-	32600	145000	2	6225DA	Y		1849	A-146	A-196	A-232
0.702	82300	9300	-	-	18900	84100	2	6205DA	Y		2065	A-146	A-196	A-232
	112000	12700	-	-	23400	104000	2	6215DA	Y		2065	A-146	A-196	A-232
	163000	18400	0.86	-	32600	145000	2	6225DA	Y		2065	A-146	A-196	A-232
0.572	112000	12700	-	-	23400	104000	2	6215DA	Y		2537	A-146	A-196	A-232
	141000	15900	-	-	32600	145000	2	6225DA	Y		2537	A-146	A-196	A-232
0.476	100000	11300	-	-	23400	104000	2	6215DA	Y		3045	A-146	A-196	A-232
	134000	15100	-	-	32600	145000	2	6225DA	Y		3045	A-146	A-196	A-232
0.417	112000	12700	-	-	23400	104000	2	6215DA	Y		3481	A-146	A-196	A-232
	141000	15900	-	-	32600	145000	2	6225DA	Y		3481	A-146	A-196	A-232
0.327	100000	11300	-	-	23400	104000	2	6215DA	Y		4437	A-146	A-196	A-232
	134000	15100	-	-	32600	145000	2	6225DA	Y		4437	A-146	A-196	A-232
0.282	112000	12700	-	-	23400	104000	2	6215DA	Y		5133	A-146	A-196	A-232
	141000	15900	-	-	32600	145000	2	6225DA	Y		5133	A-146	A-196	A-232
0.235	100000	11300	-	-	23400	104000	2	6215DA	Y		6177	A-146	A-196	A-232
	134000	15100	-	-	32600	145000	2	6225DA	Y		6177	A-146	A-196	A-232
0.192	100000	11300	-	-	23400	104000	2	6215DA	Y		7569	A-146	A-196	A-232
	134000	15100	-	-	32600	145000	2	6225DA	Y		7569	A-146	A-196	A-232

Notes: [1] Refer to Technical Information Section for R1 and R2 Model Overhung Load information.
[2] CNHM, CHHM, CNFM, CHFM, CNVM, CVVM are type designations, see page A-3.
[3] Refer to 60 Hz Selection Tables for inverter duty (AV) selections.
[4] For single phase dimensions, type CNHM, see page A-244; type CNVM, see page A-245.
[5] For type CVFM, single reduction, see page A-219; double reduction, see page A-240.

SELECTION TABLES – 50 Hz

3 HP, 2.2 kW, 50 Hz[3], 1450 RPM

Output Speed	Output Torque		Service Factor		Overhung Load[1]		Selection					Dimension Page[2]		
RPM	in•lb	N•m	SF	AGMA Class	lb	N	HP Symbol	Frame Size	Shaft Spec.	AGMA Class	Ratio	CNHM CHHM[4]	CNVM CVVM[4]	CNFM CHFM[5]
242	731	82.6	1.07	I	918	4090	3	6100	Y	A	6	A-122	A-176	A-204
			1.45	II	918	4090	3	6105	Y	B	6	A-122	A-176	A-204
			1.61	III	1040	4640	3	6110	Y	C	6	A-126	A-176	A-204
			1.78	III	1040	4640	3	6115	Y	C	6	A-126	A-176	A-204
181	973	110	1.07	I	1020	4560	3	6100	Y	A	8	A-122	A-176	A-204
			1.45	II	1020	4560	3	6105	Y	B	8	A-122	A-176	A-204
			1.61	III	1160	5170	3	6110	Y	C	8	A-126	A-176	A-204
			1.78	III	1160	5170	3	6115	Y	C	8	A-126	A-176	A-204
132	1340	151	1.07	I	1160	5170	3	6100	Y	A	11	A-122	A-176	A-204
			1.45	II	1160	5170	3	6105	Y	B	11	A-122	A-176	A-204
			1.61	III	1320	5900	3	6110	Y	C	11	A-126	A-176	A-204
			1.78	III	1320	5900	3	6115	Y	C	11	A-126	A-176	A-204
112	1580	179	1.07	I	1200	5360	3	6100	Y	A	13	A-122	A-176	A-204
			1.45	II	1200	5360	3	6105	Y	B	13	A-122	A-176	A-204
			1.61	III	1370	6090	3	6110	Y	C	13	A-126	A-176	A-204
			1.77	III	1370	6090	3	6115	Y	C	13	A-126	A-176	A-204
96.7	1820	206	1.07	I	1210	5400	3	6100	Y	A	15	A-122	A-176	A-204
			1.45	II	1210	5400	3	6105	Y	B	15	A-122	A-176	A-204
			1.61	III	1460	6490	3	6110	Y	C	15	A-126	A-176	A-204
			1.77	III	1460	6490	3	6115	Y	C	15	A-126	A-176	A-204
85.3	2070	234	1.12	I	1210	5400	3	6105	Y	A	17	A-122	A-176	A-204
			1.45	II	1470	6550	3	6110	Y	B	17	A-126	A-176	A-204
			1.77	III	1470	6550	3	6115	Y	C	17	A-126	A-176	A-204
69.0	2560	289	1.04	I	1210	5400	3	6105	Y	A	21	A-122	A-176	A-204
			1.41	II	1550	6920	3	6115	Y	B	21	A-126	A-176	A-204
			1.80	III	1840	8180	3	6120	Y	C	21	A-126	A-176	A-204
58.0	3040	344	1.01	I	1570	7010	3	6115	Y	A	25	A-126	A-176	A-204
			1.40	II	1920	8560	3	6120	Y	B	25	A-126	A-176	A-204
			1.80	III	1920	8560	3	6125	Y	C	25	A-126	A-176	A-204
50.0	3530	399	1.01	I	1610	7160	3	6115	Y	A	29	A-126	A-176	A-204
			1.58	II	1990	8880	3	6125	Y	B	29	A-126	A-176	A-204
			1.95	III	2360	10500	3	6130	Y	C	29	A-128	A-180	A-208
41.4	4260	482	0.82	-	1110	4960	3	6115	Y		35	A-126	A-176	A-204
			1.08	I	2100	9350	3	6120	Y	A	35	A-126	A-176	A-204
			1.31	II	2100	9350	3	6125	Y	B	35	A-126	A-176	A-204
			1.62	III	2470	11000	3	6130	Y	C	35	A-128	A-180	A-208
			1.87	III	2470	11000	3	6135	Y	C	35	A-128	A-180	A-208
33.7	5240	592	1.06	I	2200	9810	3	6125	Y	A	43	A-126	A-176	A-204
			1.52	II	2650	11800	3	6135	Y	B	43	A-128	A-180	A-208
			1.79	III	3590	16000	3	6140	Y	C	43	A-128	A-180	A-208
28.4	6210	702	0.90	-	2200	9810	3	6125	Y		51	A-126	A-180	A-204
			1.16	I	2740	12200	3	6135	Y	A	51	A-128	A-180	A-208
			1.56	II	3590	16000	3	6140	Y	B	51	A-128	A-180	A-208
			1.68	III	3590	16000	3	6145	Y	C	51	A-128	A-180	A-208
			2.50	III	4780	21300	3	6160	Y	C	51	A-128	A-180	A-208
24.6	7180	812	1.11	I	2870	12800	3	6135	Y	A	59	A-128	A-180	A-208
			1.45	II	3590	16000	3	6145	Y	B	59	A-128	A-180	A-208
			2.01	III	4960	22100	3	6160	Y	C	59	A-128	A-180	A-208

Notes: [1] Refer to Technical Information Section for R1 and R2 Model Overhung Load information.
[2] CNHM, CHHM, CNFM, CHFM, CNVM, CVVM are type designations, see page A-3.
[3] Refer to 60 Hz Selection Tables for inverter duty (AV) selections.
[4] For single phase dimensions, type CNHM, see page A-244; type CNVM, see page A-245.
[5] For type CVFM, single reduction, see page A-219; double reduction, see page A-240.

3 HP, 2.2 kW, 50 Hz[3], 1450 RPM

Output Speed	Output Torque		Service Factor		Overhung Load[1]		Selection					Dimension Page[2]		
RPM	in•lb	N•m	SF	AGMA Class	lb	N	HP Symbol	Frame Size	Shaft Spec.	AGMA Class	Ratio	CNHM CHHM[4]	CNVM CVVM[4]	CNFM CHFM[5]
20.4	8640	977	0.92	-	3030	13500	3	6135	Y		71	A-128	A-180	A-208
			1.19	I	3590	16000	3	6145	Y	A	71	A-128	A-180	A-208
			1.58	II	4960	22100	3	6160	Y	B	71	A-128	A-180	A-208
			2.15	III	4960	22100	3	6165	Y	C	71	A-128	A-180	A-208
16.7	10600	1200	0.98	-	3590	16000	3	6145	Y		87	A-128	A-180	A-208
			1.46	II	4960	22100	3	6160	Y	B	87	A-128	A-180	A-208
			1.71	III	4960	22100	3	6165	Y	C	87	A-128	A-180	A-208
13.9	6900	780	-	-	3300	14700	3	6130DC	Y		104	A-142	A-192	A-226
	8320	940	-	-	3300	14700	3	6135DC	Y		104	A-142	A-192	A-226
	12000	1360	1.29	II	4960	22100	3	6160DC	Y	B	104	A-142	A-192	A-228
			1.55	II	4960	22100	3	6165DC	Y	B	104	A-142	A-192	A-228
			1.86	III	6620	29500	3	6170DC	Y	C	104	A-142	A-192	A-228
12.0	8320	940	-	-	3300	14700	3	6135DC	Y		121	A-142	A-192	A-226
	14000	1580	1.11	I	4960	22100	3	6160DC	Y	A	121	A-142	A-192	A-228
			1.33	II	4960	22100	3	6165DC	Y	B	121	A-142	A-192	A-228
			1.60	III	6620	29500	3	6170DC	Y	C	121	A-142	A-192	A-228
			2.00	III	6620	29500	3	6175DC	Y	C	121	A-142	A-192	A-228
10.1	16500	1860	1.13	I	4960	22100	3	6165DC	Y	A	143	A-142	A-192	A-228
			1.35	II	6620	29500	3	6170DC	Y	B	143	A-142	A-192	A-228
			1.69	III	6620	29500	3	6175DC	Y	C	143	A-142	A-192	A-228
			2.18	III	9360	41700	3	6180DB	Y	C	143	A-142	A-192	A-230
8.79	15600	1760	-	-	4960	22100	3	6160DC	Y		165	A-142	A-192	A-228
	19000	2150	0.98	-	4960	22100	3	6165DC	Y		165	A-142	A-192	A-228
			1.18	I	6620	29500	3	6170DC	Y	A	165	A-142	A-192	A-228
			1.46	II	6620	29500	3	6175DC	Y	B	165	A-142	A-192	A-228
			1.89	III	9360	41700	3	6180DB	Y	C	165	A-142	A-192	A-230
7.44	15600	1760	-	-	4960	22100	3	6160DC	Y		195	A-142	A-192	A-228
	22500	2540	0.83	-	4960	22100	3	6165DC	Y		195	A-142	A-192	A-228
			1.24	I	6620	29500	3	6175DC	Y	A	195	A-142	A-192	A-228
			1.60	III	9360	41700	3	6180DB	Y	C	195	A-142	A-192	A-230
			1.94	III	9360	41700	3	6185DB	Y	C	195	A-142	A-192	A-230
6.28	15600	1760	-	-	4960	22100	3	6160DC	Y		231	A-142	A-192	A-228
	18600	2100	-	-	4960	22100	3	6165DC	Y		231	A-142	A-192	A-228
	26600	3010	1.05	I	6620	29500	3	6175DC	Y	A	231	A-142	A-192	A-228
			1.34	II	9360	41700	3	6180DB	Y	B	231	A-142	A-192	A-230
			1.66	III	9360	41700	3	6185DB	Y	C	231	A-142	A-192	A-230
			2.12	III	13200	59000	3	6190DA	Y	C	231	A-142	A-192	A-230
5.31	18600	2100	-	-	4960	22100	3	6165DC	Y		273	A-142	A-192	A-228
	22400	2530	-	-	6620	29500	3	6170DC	Y		273	A-142	A-192	A-228
	31500	3560	0.89	-	6620	29500	3	6175DC	Y		273	A-142	A-192	A-228
			1.14	I	9360	41700	3	6180DB	Y	A	273	A-142	A-192	A-230
			1.40	II	9360	41700	3	6185DB	Y	B	273	A-142	A-192	A-230
			1.79	III	13200	59000	3	6190DA	Y	C	273	A-142	A-192	A-230
4.55	22400	2530	-	-	6620	29500	3	6170DC	Y		319	A-142	A-192	A-228
	27900	3150	-	-	6620	29500	3	6175DC	Y		319	A-142	A-192	A-228
	36800	4160	1.20	I	9360	41700	3	6185DB	Y	A	319	A-142	A-192	A-230
			1.53	II	13200	59000	3	6190DA	Y	B	319	A-142	A-192	A-230
			1.91	III	13200	59000	3	6195DA	Y	C	319	A-142	A-192	A-230

Notes: [1] Refer to Technical Information Section for R1 and R2 Model Overhung Load information.
[2] CNHM, CHHM, CNFM, CHFM, CNVM, CVVM are type designations, see page A-3.
[3] Refer to 60 Hz Selection Tables for inverter duty (AV) selections.
[4] For single phase dimensions, type CNHM, see page A-244; type CNVM, see page A-245.
[5] For type CVFM, single reduction, see page A-219; double reduction, see page A-240.

SELECTION TABLES – 50 Hz

3 HP, 2.2 kW, 50 Hz[3], 1450 RPM

Output Speed	Output Torque		Service Factor		Overhung Load[1]		Selection					Dimension Page[2]		
RPM	in•lb	N•m	SF	AGMA Class	lb	N	HP Symbol	Frame Size	Shaft Spec.	AGMA Class	Ratio	CNHM CHHM[4]	CNVM CVVM[4]	CNFM CHFM[5]
3.85	27900	3150	-	-	6620	29500	3	6175DC	Y		377	A-142	A-192	A-228
	35800	4050	-	-	9360	41700	3	6180DB	Y		377	A-142	A-192	A-230
	43500	4920	1.02	I	9360	41700	3	6185DB	Y	A	377	A-142	A-192	A-230
			1.30	II	13200	59000	3	6190DA	Y	B	377	A-142	A-192	A-230
			1.62	III	13200	59000	3	6195DA	Y	C	377	A-142	A-192	A-230
			1.88	III	18900	84100	3	6205DB	Y	C	377	A-146	A-196	A-232
3.07	35900	4060	-	-	9360	41700	3	6180DB	Y		473	A-142	A-192	A-230
	54600	6170	1.03	I	13200	59000	3	6190DA	Y	A	473	A-142	A-192	A-230
			1.29	I	13200	59000	3	6195DA	Y	A	473	A-142	A-192	A-230
			1.51	II	18900	84100	3	6205DB	Y	B	473	A-146	A-196	A-232
			2.05	III	23400	104000	3	6215DA	Y	C	473	A-146	A-196	A-232
2.59	44200	5000	-	-	9360	41700	3	6185DB	Y		559	A-142	A-192	A-230
	64500	7290	1.09	I	13200	59000	3	6195DA	Y	A	559	A-142	A-192	A-230
			1.74	III	23400	104000	3	6215DA	Y	C	559	A-146	A-196	A-232
			2.19	III	32600	145000	3	6225DA	Y	C	559	A-146	A-196	A-232
2.23	44200	5000	-	-	9340	41600	3	6185DB	Y		649	A-142	A-192	A-230
	56500	6380	-	-	13200	58600	3	6190DA	Y		649	A-142	A-192	A-230
	74900	8460	0.94	-	13000	58000	3	6195DA	Y		649	A-142	A-192	A-230
			1.10	I	18900	84100	3	6205DB	Y	A	649	A-146	A-196	A-232
			1.49	II	23400	104000	3	6215DA	Y	B	649	A-146	A-196	A-232
			1.88	III	32600	145000	3	6225DA	Y	C	649	A-146	A-196	A-232
1.98	56500	6380	-	-	13200	59000	3	6190DA	Y		731	A-142	A-192	A-230
	84300	9530	0.84	-	13100	58500	3	6195DA	Y		731	A-142	A-192	A-230
			1.33	II	23400	104000	3	6215DA	Y	B	731	A-146	A-196	A-232
			1.68	III	32600	145000	3	6225DA	Y	C	731	A-146	A-196	A-232
			2.15	III	40200	179000	3	6235DA	Y	C	731	A-146	A-196	A-236
1.72	56500	6380	-	-	13200	59000	3	6190DA	Y		841	A-142	A-192	A-230
	70400	7960	-	-	13200	59000	3	6195DA	Y		841	A-142	A-192	A-230
	97300	11000	0.84	-	18900	84100	3	6205DA	Y		841	A-146	A-196	A-232
			1.15	I	23400	104000	3	6215DA	Y	A	841	A-146	A-196	A-232
			1.37	II	32600	145000	3	6225DA	Y	B	841	A-146	A-196	A-232
			1.72	III	40200	179000	3	6235DA	Y	C	841	A-146	A-196	A-236
			2.35	III	46700	208000	3	6245DA	Y	C	841	A-150	A-200	A-236
1.45	70400	7960	-	-	13000	58100	3	6195DA	Y		1003	A-142	A-192	A-230
	82300	9300	-	-	18900	84100	3	6205DA	Y		1003	A-146	A-196	A-232
	116000	13100	0.97	-	23400	104000	3	6215DA	Y		1003	A-146	A-196	A-232
			1.21	I	32600	145000	3	6225DA	Y	A	1003	A-146	A-196	A-232
			1.57	II	40200	179000	3	6235DA	Y	B	1003	A-146	A-196	A-236
			1.97	III	46700	208000	3	6245DA	Y	C	1003	A-150	A-200	A-236
1.16	82300	9300	-	-	18900	84100	3	6205DA	Y		1247	A-146	A-196	A-232
	112000	12700	-	-	23400	104000	3	6215DA	Y		1247	A-146	A-196	A-232
	144000	16300	0.98	-	32600	145000	3	6225DA	Y		1247	A-146	A-196	A-232
			1.26	I	40200	179000	3	6235DA	Y	A	1247	A-146	A-196	A-236
			1.59	II	46700	208000	3	6245DA	Y	B	1247	A-150	A-200	A-236

Notes: [1] Refer to Technical Information Section for R1 and R2 Model Overhung Load information.
[2] CNHM, CHHM, CNFM, CHFM, CNVM, CVVM are type designations, see page A-3.
[3] Refer to 60 Hz Selection Tables for inverter duty (AV) selections.
[4] For single phase dimensions, type CNHM, see page A-244; type CNVM, see page A-245.
[5] For type CVFM, single reduction, see page A-219; double reduction, see page A-240.

3 HP, 2.2 kW, 50 Hz[3], 1450 RPM

Output Speed	Output Torque		Service Factor		Overhung Load[1]		Selection					Dimension Page[2]		
RPM	in•lb	N•m	SF	AGMA Class	lb	N	HP Symbol	Frame Size	Shaft Spec.	AGMA Class	Ratio	CNHM CHHM[4]	CNVM CVVM[4]	CNFM CHFM[5]
0.980	100000	11300	-	-	23400	104000	3	6215DA	Y		1479	A-146	A-196	A-232
	134000	15100	-	-	32600	145000	3	6225DA	Y		1479	A-146	A-196	A-232
	171000	19300	0.89	-	40200	179000	3	6235DA	Y		1479	A-146	A-196	A-236
			1.17	I	46700	208000	3	6245DA	Y	A	1479	A-150	A-200	A-236
0.784	142000	16000	-	-	32600	145000	3	6225DA	Y		1849	A-146	A-196	A-232
	213000	24100	0.85	-	40200	179000	3	6235DA	Y		1849	A-146	A-196	A-236
			1.07	I	46700	208000	3	6245DA	Y	A	1849	A-150	A-200	A-236
0.702	141000	15900	-	-	32600	145000	3	6225DA	Y		2065	A-146	A-196	A-232
	181000	20500	-	-	40200	179000	3	6235DA	Y		2065	A-146	A-196	A-236
	238000	26900	0.96	-	46700	208000	3	6245DA	Y		2065	A-150	A-200	A-236
0.572	181000	20500	-	-	40200	179000	3	6235DA	Y		2537	A-146	A-196	A-236
	228000	25800	-	-	46700	208000	3	6245DA	Y		2537	A-150	A-200	A-236
0.476	152000	17200	-	-	40200	179000	3	6235DA	Y		3045	A-146	A-196	A-236
	200000	22600	-	-	46700	208000	3	6245DA	Y		3045	A-150	A-200	A-236
0.417	181000	20500	-	-	40200	179000	3	6235DA	Y		3481	A-146	A-196	A-236
	228000	25800	-	-	46700	208000	3	6245DA	Y		3481	A-150	A-200	A-236
0.327	152000	17200	-	-	40200	179000	3	6235DA	Y		4437	A-146	A-196	A-236
	200000	22600	-	-	46700	208000	3	6245DA	Y		4437	A-150	A-200	A-236
0.282	181000	20500	-	-	40200	179000	3	6235DA	Y		5133	A-146	A-196	A-236
	228000	25800	-	-	46700	208000	3	6245DA	Y		5133	A-150	A-200	A-236
0.235	152000	17200	-	-	40200	179000	3	6235DA	Y		6177	A-146	A-196	A-236
	200000	22600	-	-	46700	208000	3	6245DA	Y		6177	A-150	A-200	A-236
0.192	152000	17200	-	-	40200	179000	3	6235DA	Y		7569	A-146	A-196	A-236
	200000	22600	-	-	46700	208000	3	6245DA	Y		7569	A-150	A-200	A-236

5 HP, 3.7 kW, 50 Hz[3], 1450 RPM

Output Speed	Output Torque		Service Factor		Overhung Load[1]		Selection					Dimension Page[2]		
RPM	in•lb	N•m	SF	AGMA Class	lb	N	HP Symbol	Frame Size	Shaft Spec.	AGMA Class	Ratio	CNHM CHHM	CNFM CHFM	CNVM CVVM
242	1230	139	1.06	I	1030	4580	5	6115	Y	A	6	A-126	A-176	A-204
			1.37	II	1170	5210	5	6120	Y	B	6	A-126	A-176	A-204
			1.88	III	1170	5210	5	6125	Y	C	6	A-126	A-176	A-204
181	1640	185	1.06	I	1140	5090	5	6115	Y	A	8	A-126	A-176	A-204
			1.37	II	1300	5800	5	6120	Y	B	8	A-126	A-176	A-204
			1.88	III	1300	5800	5	6125	Y	C	8	A-126	A-176	A-204
132	2260	255	1.06	I	1300	5780	5	6115	Y	A	11	A-126	A-176	A-204
			1.37	II	1480	6580	5	6120	Y	B	11	A-126	A-176	A-204
			1.60	III	1480	6580	5	6125	Y	C	11	A-126	A-176	A-204
			2.54	III	1740	7770	5	6130	Y	C	11	A-128	A-180	A-208
112	2660	301	1.05	I	1340	5960	5	6115	Y	A	13	A-126	A-176	A-204
			1.37	II	1520	6780	5	6120	Y	B	13	A-126	A-176	A-204
			1.60	III	1520	6780	5	6125	Y	C	13	A-126	A-176	A-204
			2.54	III	1810	8080	5	6130	Y	C	13	A-128	A-180	A-208
96.7	3070	347	1.05	I	1420	6330	5	6115	Y	A	15	A-126	A-176	A-204
			1.37	II	1630	7260	5	6120	Y	B	15	A-126	A-176	A-204
			1.60	III	1630	7260	5	6125	Y	C	15	A-126	A-176	A-204
			2.10	III	1850	8250	5	6130	Y	C	15	A-128	A-180	A-208

Notes: [1] Refer to Technical Information Section for R1 and R2 Model Overhung Load information.
[2] CNHM, CHHM, CNFM, CHFM, CNVM, CVVM are type designations, see page A-3.
[3] Refer to 60 Hz Selection Tables for inverter duty (AV) selections.
[4] For single phase dimensions, type CNHM, see page A-244; type CNVM, see page A-245.
[5] For type CVFM, single reduction, see page A-219; double reduction, see page A-240.

SELECTION TABLES – 50 Hz

5 HP, 3.7 kW, 50 Hz[3], 1450 RPM

Output Speed	Output Torque		Service Factor		Overhung Load[1]		Selection					Dimension Page[2]		
RPM	in•lb	N•m	SF	AGMA Class	lb	N	HP Symbol	Frame Size	Shaft Spec.	AGMA Class	Ratio	CNHM CHHM[4]	CNVM CVVM[4]	CNFM CHFM[5]
85.3	3490	394	1.05	I	1430	6380	5	6115	Y	A	17	A-126	A-176	A-204
			1.53	II	1640	7320	5	6125	Y	B	17	A-126	A-176	A-204
			1.96	III	1990	8850	5	6130	Y	C	17	A-128	A-180	A-208
69.0	4300	486	0.84	-	1120	5010	5	6115	Y		21	A-126	A-176	A-204
			1.29	I	1800	8010	5	6125	Y	A	21	A-126	A-176	A-204
			1.61	III	2120	9440	5	6130	Y	C	21	A-128	A-180	A-208
			1.82	III	2120	9440	5	6135	Y	C	21	A-128	A-180	A-208
58.0	5120	579	1.07	I	1870	8350	5	6125	Y	A	25	A-126	A-176	A-204
			1.55	II	2200	9790	5	6135	Y	B	25	A-128	A-180	A-208
			1.86	III	3280	14600	5	6140	Y	C	25	A-128	A-180	A-208
50.0	5940	671	0.94	-	1940	8640	5	6125	Y		29	A-126	A-176	A-204
			1.16	I	2310	10300	5	6130	Y	A	29	A-128	A-180	A-208
			1.31	II	2310	10300	5	6135	Y	B	29	A-128	A-180	A-208
			1.61	III	3350	14900	5	6140	Y	C	29	A-128	A-180	A-208
			2.04	III	3350	14900	5	6145	Y	C	29	A-128	A-180	A-208
41.4	7170	810	1.11	I	2420	10800	5	6135	Y	A	35	A-128	A-180	A-208
			1.41	II	3590	16000	5	6140	Y	B	35	A-128	A-180	A-208
			1.69	III	3590	16000	5	6145	Y	C	35	A-128	A-180	A-208
			2.16	III	4290	19100	5	6160	Y	C	35	A-128	A-180	A-208
33.7	8800	995	0.91	-	2580	11500	5	6135	Y		43	A-128	A-180	A-208
			1.26	I	3590	16000	5	6145	Y	A	43	A-128	A-180	A-208
			1.74	III	4560	20300	5	6160	Y	C	43	A-128	A-180	A-208
			2.11	III	4560	20300	5	6165	Y	C	43	A-128	A-180	A-208
28.4	10400	1180	1.00	I	3590	16000	5	6145	Y	A	51	A-128	A-180	A-208
			1.49	II	4740	21100	5	6160	Y	B	51	A-128	A-180	A-208
			1.78	III	4740	21100	5	6165	Y	C	51	A-128	A-180	A-208
24.6	12100	1370	1.19	I	4960	22100	5	6160	Y	A	59	A-128	A-180	A-208
			1.54	II	4960	22100	5	6165	Y	B	59	A-128	A-180	A-208
			1.79	III	5640	25100	5	6170	Y	C	59	A-132	A-180	A-210
20.4	14500	1640	1.28	I	4960	22100	5	6165	Y	A	71	A-128	A-180	A-208
			1.49	II	5950	26500	5	6170	Y	B	71	A-132	A-180	A-210
			1.89	III	5950	26500	5	6175	Y	C	71	A-132	A-180	A-210
16.7	17800	2010	1.02	I	4890	21800	5	6165	Y	A	87	A-128	A-180	A-208
			1.52	II	6380	28400	5	6175	Y	B	87	A-132	A-180	A-210
			1.93	III	8620	38400	5	6180	Y	C	87	A-132	A-180	A-210
13.9	15600	1760	-	-	4960	22100	5	6160DC	Y		104	A-142	A-192	A-228
	20200	2280	0.92	-	4960	22100	5	6165DC	Y		104	A-142	A-192	A-228
			1.11	I	6620	29500	5	6170DC	Y	A	104	A-142	A-192	A-228
			1.38	II	6620	29500	5	6175DC	Y	B	104	A-142	A-192	A-228
			1.78	III	9180	40900	5	6180DB	Y	C	104	A-142	A-192	A-230
12.0	18600	2100	-	-	4960	22100	5	6165DC	Y		121	A-142	A-192	A-228
	23400	2650	1.19	I	6620	29500	5	6175DC	Y	A	121	A-142	A-192	A-228
			1.53	II	9360	41700	5	6180DB	Y	B	121	A-142	A-192	A-230
			1.81	III	9360	41700	5	6185DB	Y	C	121	A-142	A-192	A-230
10.1	22400	2530	-	-	6620	29500	5	6170DC	Y		143	A-142	A-192	A-228
	27800	3140	1.00	I	6620	29500	5	6175DC	Y	A	143	A-142	A-192	A-228
			1.56	II	9360	41700	5	6185DB	Y	B	143	A-142	A-192	A-230
			2.03	III	13200	59000	5	6190DB	Y	C	143	A-142	A-192	A-230

Notes: [1] Refer to Technical Information Section for R1 and R2 Model Overhung Load information.
[2] CNHM, CHHM, CNFM, CHFM, CNVM, CVVM are type designations, see page A-3.
[3] Refer to 60 Hz Selection Tables for inverter duty (AV) selections.
[4] For single phase dimensions, type CNHM, see page A-244; type CNVM, see page A-245.
[5] For type CVFM, single reduction, see page A-219; double reduction, see page A-240.

5 HP, 3.7 kW, 50 Hz[3], 1450 RPM

Output Speed	Output Torque		Service Factor		Overhung Load[1]		Selection					Dimension Page[2]		
RPM	in•lb	N•m	SF	AGMA Class	lb	N	HP Symbol	Frame Size	Shaft Spec.	AGMA Class	Ratio	CNHM CHHM[4]	CNVM CVVM[4]	CNFM CHFM[5]
8.79	22400	2530	-	-	6620	29500	5	6170DC	Y		165	A-142	A-192	A-228
	32000	3620	0.87	-	6620	29500	5	6175DC	Y		165	A-142	A-192	A-228
			1.12	I	9360	41700	5	6180DB	Y	A	165	A-142	A-192	A-230
			1.36	II	9360	41700	5	6185DB	Y	B	165	A-142	A-192	A-230
			1.69	III	13200	59000	5	6190DA	Y	C	165	A-142	A-192	A-230
			1.76	III	13200	59000	5	6190DB	Y	C	165	A-142	A-192	A-230
7.44	27900	3150	-	-	6620	29500	5	6175DC	Y		195	A-142	A-192	A-228
	37900	4280	1.15	I	9360	41700	5	6185DB	Y	A	195	A-142	A-192	A-230
			1.49	II	13200	59000	5	6190DA	Y	B	195	A-142	A-192	A-230
			1.85	III	13200	59000	5	6195DB	Y	C	195	A-142	A-192	A-230
6.28	35800	4050	-	-	9360	41700	5	6180DB	Y		231	A-142	A-192	A-230
	44900	5070	0.98	-	9360	41700	5	6185DB	Y		231	A-142	A-192	A-230
			1.26	I	13200	59000	5	6190DA	Y	A	231	A-142	A-192	A-230
			1.57	II	13200	59000	5	6195DA	Y	B	231	A-142	A-192	A-230
			1.83	III	18900	84100	5	6205DB	Y	C	231	A-146	A-196	A-232
5.31	35800	4050	-	-	9360	41700	5	6180DB	Y		273	A-142	A-192	A-230
	53000	5990	0.84	-	9360	41700	5	6185DB	Y		273	A-142	A-192	A-230
			1.07	I	13200	59000	5	6190DA	Y	A	273	A-142	A-192	A-230
			1.33	II	13200	59000	5	6195DA	Y	B	273	A-142	A-192	A-230
			2.09	III	23400	104000	5	6215DA	Y	C	273	A-146	A-196	A-232
4.55	44200	5000	-	-	9360	41700	5	6185DB	Y		319	A-142	A-192	A-230
	61900	7000	1.14	I	13200	59000	5	6195DA	Y	A	319	A-142	A-192	A-230
			1.32	II	18900	84100	5	6205DB	Y	B	319	A-146	A-196	A-232
			1.81	III	23400	104000	5	6215DA	Y	C	319	A-146	A-196	A-232
3.85	56500	6380	-	-	13200	59000	5	6190DA	Y		377	A-142	A-192	A-230
	73200	8270	0.96	-	13200	58900	5	6195DA	Y		377	A-142	A-192	A-230
			1.03	I	18900	84100	5	6205DA	Y	A	377	A-146	A-196	A-232
			1.53	II	23400	104000	5	6215DA	Y	B	377	A-146	A-196	A-232
			1.82	III	32600	145000	5	6225DA	Y	C	377	A-146	A-196	A-232
3.07	70400	7960	-	-	13200	59000	5	6195DA	Y		473	A-142	A-192	A-230
	92000	10400	0.80	-	18900	84100	5	6205DA	Y		473	A-146	A-196	A-232
			1.22	I	23400	104000	5	6215DA	Y	A	473	A-146	A-196	A-232
			1.54	II	32600	145000	5	6225DA	Y	B	473	A-146	A-196	A-232
			1.98	III	40200	179000	5	6235DA	Y	C	473	A-146	A-196	A-236
2.59	109000	12300	1.03	I	23400	104000	5	6215DA	Y	A	559	A-146	A-196	A-232
			1.31	II	32600	145000	5	6225DA	Y	B	559	A-146	A-196	A-232
			1.67	III	40200	179000	5	6235DA	Y	C	559	A-146	A-196	A-236
			2.10	III	46700	208000	5	6245DA	Y	C	559	A-150	A-200	A-236
2.23	126000	14200	0.89	-	23400	104000	5	6215DA	Y		649	A-146	A-196	A-232
			1.12	I	32600	145000	5	6225DA	Y	A	649	A-146	A-196	A-232
			1.44	II	40200	179000	5	6235DA	Y	B	649	A-146	A-196	A-236
			1.81	III	46700	208000	5	6245DA	Y	C	649	A-150	A-200	A-236
1.98	112000	12700	-	-	23400	104000	5	6215DA	Y		731	A-146	A-196	A-232
	142000	16000	1.00	I	32600	145000	5	6225DA	Y	A	731	A-146	A-196	A-232
			1.61	III	46700	208000	5	6245DA	Y	C	731	A-150	A-200	A-236
			2.15	III	57900	258000	5	6255DA	Y	C	731	A-150	A-200	A-236

Notes: [1] Refer to Technical Information Section for R1 and R2 Model Overhung Load information.
[2] CNHM, CHHM, CNFM, CHFM, CNVM, CVVM are type designations, see page A-3.
[3] Refer to 60 Hz Selection Tables for inverter duty (AV) selections.
[4] For single phase dimensions, type CNHM, see page A-244; type CNVM, see page A-245.
[5] For type CVFM, single reduction, see page A-219; double reduction, see page A-240.

SELECTION TABLES – 50 Hz

5 HP, 3.7 kW, 50 Hz[3], 1450 RPM

Output Speed	Output Torque		Service Factor		Overhung Load[1]		Selection					Dimension Page[2]		
RPM	in•lb	N•m	SF	AGMA Class	lb	N	HP Symbol	Frame Size	Shaft Spec.	AGMA Class	Ratio	CNHM CHHM[4]	CNVM CVVM[4]	CNFM CHFM[5]
1.72	112000	12700	-	-	23400	104000	5	6215DA	Y		841	A-146	A-196	A-232
	163000	18400	0.82	-	32600	145000	5	6225DA	Y		841	A-146	A-196	A-232
			1.02	I	40200	179000	5	6235DA	Y	A	841	A-146	A-196	A-236
			1.40	II	46700	208000	5	6245DA	Y	B	841	A-150	A-200	A-236
			1.76	III	57900	258000	5	6255DA	Y	C	841	A-150	A-200	A-236
1.45	141000	15900	-	-	32600	145000	5	6225DA	Y		1003	A-146	A-196	A-232
	195000	22000	0.93	-	40200	179000	5	6235DA	Y		1003	A-146	A-196	A-236
			1.17	I	46700	208000	5	6245DA	Y	A	1003	A-150	A-200	A-236
			1.57	II	57900	258000	5	6255DA	Y	B	1003	A-150	A-200	A-236
1.16	181000	20500	-	-	40200	179000	5	6235DA	Y		1247	A-146	A-196	A-236
	242000	27300	0.94	-	46700	208000	5	6245DA	Y		1247	A-150	A-200	A-236
			1.26	I	57900	258000	5	6255DA	Y	A	1247	A-150	A-200	A-236
0.980	200000	22600	-	-	46700	208000	5	6245DA	Y		1479	A-150	A-200	A-236
	287000	32400	0.96	-	57900	258000	5	6255DA	Y		1479	A-150	A-200	A-236
0.784	359000	40600	0.85	-	57900	258000	5	6255DA	Y		1849	A-150	A-200	A-236
0.702	305000	34500	-	-	57900	258000	5	6255DA	Y		2065	A-150	A-200	A-236
0.572	305000	34500	-	-	57900	258000	5	6255DA	Y		2537	A-150	A-200	A-236
0.476	274000	31000	-	-	57900	258000	5	6255DA	Y		3045	A-150	A-200	A-236
0.417	305000	34500	-	-	57900	258000	5	6255DA	Y		3481	A-150	A-200	A-236
0.327	274000	31000	-	-	57900	258000	5	6255DA	Y		4437	A-150	A-200	A-236
0.282	305000	34500	-	-	57900	258000	5	6255DA	Y		5133	A-150	A-200	A-236
0.235	274000	31000	-	-	57900	258000	5	6255DA	Y		6177	A-150	A-200	A-236
0.192	274000	31000	-	-	57900	258000	5	6255DA	Y		7569	A-150	A-200	A-236

7.5 HP, 5.5 kW, 50 Hz[3], 1450 RPM

Output Speed	Output Torque		Service Factor		Overhung Load[1]		Selection					Dimension Page[2]		
RPM	in•lb	N•m	SF	AGMA Class	lb	N	HP Symbol	Frame Size	Shaft Spec.	AGMA Class	Ratio	CNHM CHHM[4]	CNVM CVVM[4]	CNFM CHFM[5]
242	1820	206	1.27	I	1150	5140	8	6125	Y	A	6	A-126	A-176	A-204
			1.71	III	1360	6060	8	6130	Y	C	6	A-128	A-180	A-208
			2.05	III	1360	6060	8	6135	Y	C	6	A-128	A-180	A-208
181	2430	275	1.26	I	1280	5710	8	6125	Y	A	8	A-126	A-176	A-204
			1.71	III	1510	6740	8	6130	Y	C	8	A-128	A-180	A-208
			2.05	III	1510	6740	8	6135	Y	C	8	A-128	A-180	A-208
132	3350	379	1.08	I	1450	6450	8	6125	Y	A	11	A-126	A-176	A-204
			1.71	III	1720	7680	8	6130	Y	C	11	A-128	A-180	A-208
			2.05	III	1720	7680	8	6135	Y	C	11	A-128	A-180	A-208
112	3960	447	1.08	I	1490	6630	8	6125	Y	A	13	A-126	A-176	A-204
			1.71	III	1790	7980	8	6130	Y	C	13	A-128	A-180	A-208
			1.85	III	1790	7980	8	6135	Y	C	13	A-128	A-180	A-208
96.7	4570	516	1.08	I	1590	7100	8	6125	Y	A	15	A-126	A-176	A-204
			1.41	II	1830	8130	8	6130	Y	B	15	A-128	A-180	A-208
			1.63	III	1830	8130	8	6135	Y	C	15	A-128	A-180	A-208
			2.18	III	2780	12400	8	6140	Y	C	15	A-128	A-180	A-208
85.3	5180	585	1.03	I	1610	7150	8	6125	Y	A	17	A-126	A-176	A-204
			1.51	II	1960	8710	8	6135	Y	B	17	A-128	A-180	A-208
			1.84	III	2920	13000	8	6140	Y	C	17	A-128	A-180	A-208

Notes: [1] Refer to Technical Information Section for R1 and R2 Model Overhung Load information.
[2] CNHM, CHHM, CNFM, CHFM, CNVM, CVVM are type designations, see page A-3.
[3] Refer to 60 Hz Selection Tables for inverter duty (AV) selections.
[4] For single phase dimensions, type CNHM, see page A-244; type CNVM, see page A-245.
[5] For type CVFM, single reduction, see page A-219; double reduction, see page A-240.

7.5 HP, 5.5 kW, 50 Hz[3], 1450 RPM

Output Speed	Output Torque		Service Factor		Overhung Load[1]		Selection					Dimension Page[2]		
RPM	in•lb	N•m	SF	AGMA Class	lb	N	HP Symbol	Frame Size	Shaft Spec.	AGMA Class	Ratio	CNHM CHHM[4]	CNVM CVVM[4]	CNFM CHFM[5]
69.0	6400	723	0.87	-	1750	7780	8	6125	Y		21	A-126	A-176	A-204
			1.22	I	2080	9260	8	6135	Y	A	21	A-128	A-180	A-208
			1.57	II	3120	13900	8	6140	Y	B	21	A-128	A-180	A-208
			1.73	III	3120	13900	8	6145	Y	C	21	A-128	A-180	A-208
			2.35	III	3680	16400	8	6160	Y	C	21	A-128	A-180	A-208
58.0	7610	860	1.05	I	2150	9580	8	6135	Y	A	25	A-128	A-180	A-208
			1.44	II	3260	14500	8	6145	Y	B	25	A-128	A-180	A-208
			1.79	III	3840	17100	8	6160	Y	C	25	A-128	A-180	A-208
50.0	8830	998	0.88	-	2250	10000	8	6135	Y		29	A-128	A-180	A-208
			1.08	I	3320	14800	8	6140	Y	A	29	A-128	A-180	A-208
			1.37	II	3320	14800	8	6145	Y	B	29	A-128	A-180	A-208
			1.74	III	4000	17800	8	6160	Y	C	29	A-128	A-180	A-208
			2.07	III	4000	17800	8	6165	Y	C	29	A-128	A-180	A-208
41.4	10600	1200	1.14	I	3570	15900	8	6145	Y	A	35	A-128	A-180	A-208
			1.46	II	4220	18800	8	6160	Y	B	35	A-128	A-180	A-208
			1.74	III	4220	18800	8	6165	Y	C	35	A-128	A-180	A-208
			2.04	III	4800	21400	8	6170	Y	C	35	A-132	A-180	A-210
33.7	13100	1480	0.85	-	3390	15100	8	6145	Y		43	A-128	A-180	A-208
			1.17	I	4490	20000	8	6160	Y	A	43	A-128	A-180	A-208
			1.42	II	4490	20000	8	6165	Y	B	43	A-128	A-180	A-208
			1.65	III	5120	22800	8	6170	Y	C	43	A-132	A-180	A-210
			2.05	III	5120	22800	8	6175	Y	C	43	A-132	A-180	A-210
28.4	15600	1760	1.20	I	4670	20800	8	6165	Y	A	51	A-128	A-180	A-208
			1.39	II	5320	23700	8	6170	Y	B	51	A-132	A-180	A-210
			1.79	III	5320	23700	8	6175	Y	C	51	A-132	A-180	A-210
24.6	18000	2030	1.03	I	4960	22100	8	6165	Y	A	59	A-128	A-180	A-208
			1.51	II	5570	24800	8	6175	Y	B	59	A-132	A-180	A-210
			1.77	III	7500	33400	8	6180	Y	C	59	A-132	A-180	A-210
20.4	21600	2440	0.86	-	4960	22100	8	6165	Y		71	A-128	A-180	A-208
			1.27	I	5880	26200	8	6175	Y	A	71	A-132	A-180	A-210
			1.60	III	7970	35500	8	6180	Y	C	71	A-132	A-180	A-210
			1.78	III	7970	35500	8	6185	Y	C	71	A-132	A-180	A-210
16.7	26500	2990	1.02	I	6260	27900	8	6175	Y	A	87	A-132	A-180	A-210
			1.56	II	8550	38100	8	6185	Y	B	87	A-132	A-180	A-210
			2.13	III	12000	53600	8	6190	Y	C	87	A-132	A-180	A-210
13.9	18600	2100	-	-	4960	22100	8	6165DC	Y		104	A-142	A-192	A-228
	22400	2530	-	-	6620	29500	8	6170DC	Y		104	A-142	A-192	A-228
	30000	3390	0.93	-	6620	29500	8	6175DC	Y		104	A-142	A-192	A-228
			1.20	I	9090	40500	8	6180DB	Y	A	104	A-142	A-192	A-230
			1.45	II	9090	40500	8	6185DB	Y	B	104	A-142	A-192	A-230
			1.88	III	12800	56800	8	6190DB	Y	C	104	A-142	A-192	A-230
12.0	22400	2530	-	-	6620	29500	8	6170DC	Y		121	A-142	A-192	A-228
	34900	3940	0.80	-	6620	29500	8	6175DC	Y		121	A-142	A-192	A-228
			1.22	I	9360	41700	8	6185DB	Y	A	121	A-142	A-192	A-230
			1.62	III	13200	59000	8	6190DB	Y	C	121	A-142	A-192	A-230
			1.92	III	13200	59000	8	6195DB	Y	C	121	A-142	A-192	A-230

Notes: [1] Refer to Technical Information Section for R1 and R2 Model Overhung Load information.
[2] CNHM, CHHM, CNFM, CHFM, CNVM, CVVM are type designations, see page A-3.
[3] Refer to 60 Hz Selection Tables for inverter duty (AV) selections.
[4] For single phase dimensions, type CNHM, see page A-244; type CNVM, see page A-245.
[5] For type CVFM, single reduction, see page A-219; double reduction, see page A-240.

SELECTION TABLES – 50 Hz

7.5 HP, 5.5 kW, 50 Hz[3], 1450 RPM

Output Speed	Output Torque		Service Factor		Overhung Load[1]		Selection					Dimension Page[2]		
RPM	in•lb	N•m	SF	AGMA Class	lb	N	HP Symbol	Frame Size	Shaft Spec.	AGMA Class	Ratio	CNHM CHHM[4]	CNVM CVVM[4]	CNFM CHFM[5]
10.1	27900	3150	-	-	6620	29500	8	6175DC	Y		143	A-142	A-192	A-228
	41200	4660	1.05	I	9360	41700	8	6185DB	Y	A	143	A-142	A-192	A-230
			1.37	II	13200	59000	8	6190DB	Y	B	143	A-142	A-192	A-230
			1.64	III	13200	59000	8	6195DB	Y	C	143	A-142	A-192	A-230
8.79	27900	3150	-	-	6620	29500	8	6175DC	Y		165	A-142	A-192	A-228
	35900	4060	-	-	9360	41700	8	6180DB	Y		165	A-142	A-192	A-230
	47600	5380	0.92	-	9360	41700	8	6185DB	Y		165	A-142	A-192	A-230
			1.14	I	13200	59000	8	6190DA	Y	A	165	A-142	A-192	A-230
			1.47	II	13200	59000	8	6195DB	Y	B	165	A-142	A-192	A-230
			1.72	III	18900	84100	8	6205DB	Y	C	165	A-146	A-196	A-232
			2.17	III	23400	104000	8	6215DA	Y	C	165	A-146	A-196	A-232
7.44	35900	4060	-	-	9360	41700	8	6180DB	Y		195	A-142	A-192	A-230
	43500	4920	-	-	9360	41700	8	6185DB	Y		195	A-142	A-192	A-230
	56300	6360	1.00	I	13200	58900	8	6190DA	Y	A	195	A-142	A-192	A-230
			1.46	II	18900	84100	8	6205DB	Y	B	195	A-146	A-196	A-232
			1.91	III	23400	104000	8	6215DA	Y	C	195	A-146	A-196	A-232
6.28	44200	5000	-	-	9360	41700	8	6185DB	Y		231	A-142	A-192	A-230
	66600	7530	1.06	I	13200	59000	8	6195DA	Y	A	231	A-142	A-192	A-230
			1.66	III	23400	104000	8	6215DA	Y	C	231	A-146	A-196	A-232
			1.97	III	31200	139000	8	6225DA	Y	C	231	A-146	A-196	A-232
5.31	44200	5000	-	-	9360	41700	8	6185DB	Y		273	A-142	A-192	A-230
	56500	6380	-	-	13200	59000	8	6190DA	Y		273	A-142	A-192	A-230
	78700	8900	0.89	-	13200	59000	8	6195DA	Y		273	A-142	A-192	A-230
			1.04	I	18900	84100	8	6205DB	Y	A	273	A-146	A-196	A-232
			1.40	II	23400	104000	8	6215DA	Y	B	273	A-146	A-196	A-232
			1.66	III	32600	145000	8	6225DA	Y	C	273	A-146	A-196	A-232
			2.12	III	40200	179000	8	6235DA	Y	C	273	A-146	A-196	A-236
4.55	56500	6380	-	-	13200	59000	8	6190DA	Y		319	A-142	A-192	A-230
	70400	7960	-	-	13200	59000	8	6195DA	Y		319	A-142	A-192	A-230
	92000	10400	0.89	-	18900	84100	8	6205DB	Y		319	A-146	A-196	A-232
			1.22	I	23400	104000	8	6215DA	Y	A	319	A-146	A-196	A-232
			1.45	II	32600	145000	8	6225DA	Y	B	319	A-146	A-196	A-232
			1.82	III	40200	179000	8	6235DA	Y	C	319	A-146	A-196	A-236
3.85	70400	7960	-	-	13200	59000	8	6195DA	Y		377	A-142	A-192	A-230
	75700	8550	-	-	18900	84100	8	6205DA	Y		377	A-146	A-196	A-232
	109000	12300	1.03	I	23400	104000	8	6215DA	Y	A	377	A-146	A-196	A-232
			1.22	I	32600	145000	8	6225DA	Y	A	377	A-146	A-196	A-232
			1.54	II	40200	179000	8	6235DA	Y	B	377	A-146	A-196	A-236
			2.10	III	46700	208000	8	6245DA	Y	C	377	A-150	A-200	A-236
3.07	136000	15400	0.82	-	23400	104000	8	6215DA	Y		473	A-146	A-196	A-232
			1.04	I	32600	145000	8	6225DA	Y	A	473	A-146	A-196	A-232
			1.33	II	40200	179000	8	6235DA	Y	B	473	A-146	A-196	A-236
			1.67	III	46700	208000	8	6245DA	Y	C	473	A-150	A-200	A-236
			2.24	III	57900	258000	8	6255DA	Y	C	473	A-150	A-200	A-236

Notes: [1] Refer to Technical Information Section for R1 and R2 Model Overhung Load information.
[2] CNHM, CHHM, CNFM, CHFM, CNVM, CVVM are type designations, see page A-3.
[3] Refer to 60 Hz Selection Tables for inverter duty (AV) selections.
[4] For single phase dimensions, type CNHM, see page A-244; type CNVM, see page A-245.
[5] For type CVFM, single reduction, see page A-219; double reduction, see page A-240.

7.5 HP, 5.5 kW, 50 Hz[3], 1450 RPM

Output Speed	Output Torque		Service Factor		Overhung Load[1]		Selection					Dimension Page[2]		
RPM	in•lb	N•m	SF	AGMA Class	lb	N	HP Symbol	Frame Size	Shaft Spec.	AGMA Class	Ratio	CNHM CHHM[4]	CNVM CVVM[4]	CNFM CHFM[5]
2.59	112000	12700	-	-	23400	104000	8	6215DA	Y		559	A-146	A-196	A-232
	161000	18200	0.88	-	32600	145000	8	6225DA	Y		559	A-146	A-196	A-232
			1.12	I	40200	179000	8	6235DA	Y	A	559	A-146	A-196	A-236
			1.42	II	46700	208000	8	6245DA	Y	B	559	A-150	A-200	A-236
			1.89	III	57900	258000	8	6255DA	Y	C	559	A-150	A-200	A-236
2.23	112000	12700	-	-	23400	104000	8	6215DA	Y		649	A-146	A-196	A-232
	141000	15900	-	-	32600	145000	8	6225DA	Y		649	A-146	A-196	A-232
	188000	21200	0.97	-	40200	179000	8	6235DA	Y		649	A-146	A-196	A-236
			1.22	I	46700	208000	8	6245DA	Y	A	649	A-150	A-200	A-236
			1.63	III	57900	258000	8	6255DA	Y	C	649	A-150	A-200	A-236
			2.17	III	62000	276000	8	6265DA	Y	C	649	A-150	A-200	A-236
1.98	142000	16000	-	-	32600	145000	8	6225DA	Y		731	A-146	A-196	A-232
	211000	23800	0.86	-	40200	179000	8	6235DA	Y		731	A-146	A-196	A-236
			1.08	I	46700	208000	8	6245DA	Y	A	731	A-150	A-200	A-236
			1.45	II	57900	258000	8	6255DA	Y	B	731	A-150	A-200	A-236
			1.93	III	62000	276000	8	6265DA	Y	C	731	A-150	A-200	A-236
1.72	167000	18900	-	-	40200	179000	8	6235DA	Y		841	A-146	A-196	A-236
	242000	27400	0.94	-	46700	208000	8	6245DA	Y		841	A-150	A-200	A-236
			1.18	I	57900	258000	8	6255DA	Y	A	841	A-150	A-200	A-236
			1.68	III	62000	276000	8	6265DA	Y	C	841	A-150	A-200	A-236
1.45	181000	20500	-	-	40200	179000	8	6235DA	Y		1003	A-146	A-196	A-236
	228000	25800	-	-	46700	208000	8	6245DA	Y		1003	A-150	A-200	A-236
	289000	32700	1.06	I	57900	258000	8	6255DA	Y	A	1003	A-150	A-200	A-236
			1.41	II	62000	276000	8	6265DA	Y	B	1003	A-150	A-200	A-236
1.16	228000	25800	-	-	46700	208000	8	6245DA	Y		1247	A-150	A-200	A-236
	360000	40700	0.85	-	57900	258000	8	6255DA	Y		1247	A-150	A-200	A-236
			1.13	I	62000	276000	8	6265DA	Y	A	1247	A-150	A-200	A-236
0.980	274000	31000	-	-	57900	258000	8	6255DA	Y		1479	A-150	A-200	A-236
	426000	48200	0.91	-	62000	276000	8	6265DA	Y		1479	A-150	A-200	A-236
0.784	305000	34500	-	-	57900	258000	8	6255DA	Y		1849	A-150	A-200	A-236
	407000	46000	-	-	62000	276000	8	6265DA	Y		1849	A-150	A-200	A-236
0.702	407000	46000	-	-	62000	276000	8	6265DA	Y		2065	A-150	A-200	A-236
0.572	407000	46000	-	-	62000	276000	8	6265DA	Y		2537	A-150	A-200	A-236
0.476	389000	44000	-	-	62000	276000	8	6265DA	Y		3045	A-150	A-200	A-236
0.417	407000	46000	-	-	62000	276000	8	6265DA	Y		3481	A-150	A-200	A-236
0.327	389000	44000	-	-	62000	276000	8	6265DA	Y		4437	A-150	A-200	A-236
0.282	407000	46000	-	-	62000	276000	8	6265DA	Y		5133	A-150	A-200	A-236
0.235	389000	44000	-	-	62000	276000	8	6265DA	Y		6177	A-150	A-200	A-236
0.192	389000	44000	-	-	62000	276000	8	6265DA	Y		7569	A-150	A-200	A-236

Notes: [1] Refer to Technical Information Section for R1 and R2 Model Overhung Load information.
[2] CNHM, CHHM, CNFM, CHFM, CNVM, CVVM are type designations, see page A-3.
[3] Refer to 60 Hz Selection Tables for inverter duty (AV) selections.
[4] For single phase dimensions, type CNHM, see page A-244; type CNVM, see page A-245.
[5] For type CVFM, single reduction, see page A-219; double reduction, see page A-240.

SELECTION TABLES – 50 Hz

10 HP, 7.5 kW, 50 Hz[3], 1450 RPM

Output Speed	Output Torque		Service Factor		Overhung Load[1]		Selection					Dimension Page[2]		
RPM	in•lb	N•m	SF	AGMA Class	lb	N	HP Symbol	Frame Size	Shaft Spec.	AGMA Class	Ratio	CNHM CHHM[4]	CNVM CVVM[4]	CNFM CHFM[5]
242	2500	282	1.25	I	1340	5980	10	6130	Y	A	6	A-128	A-180	A-208
			1.51	II	1340	5980	10	6135	Y	B	6	A-128	A-180	A-208
			1.73	III	2090	9330	10	6140	Y	C	6	A-128	A-180	A-208
			2.01	III	2090	9330	10	6145	Y	C	6	A-128	A-180	A-208
181	3320	375	1.25	I	1490	6650	10	6130	Y	A	8	A-128	A-180	A-208
			1.51	II	1490	6650	10	6135	Y	B	8	A-128	A-180	A-208
			1.73	III	2310	10300	10	6140	Y	C	8	A-128	A-180	A-208
			2.01	III	2310	10300	10	6145	Y	C	8	A-128	A-180	A-208
132	4570	516	1.25	I	1700	7570	10	6130	Y	A	11	A-128	A-180	A-208
			1.51	II	1700	7570	10	6135	Y	B	11	A-128	A-180	A-208
			1.73	III	2600	11600	10	6140	Y	C	11	A-128	A-180	A-208
			2.01	III	2600	11600	10	6145	Y	C	11	A-128	A-180	A-208
112	5400	610	1.25	I	1760	7860	10	6130	Y	A	13	A-128	A-180	A-208
			1.36	II	1760	7860	10	6135	Y	B	13	A-128	A-180	A-208
			1.73	III	2650	11800	10	6140	Y	C	13	A-128	A-180	A-208
			2.01	III	2650	11800	10	6145	Y	C	13	A-128	A-180	A-208
96.7	6230	704	1.20	I	1800	8000	10	6135	Y	A	15	A-128	A-180	A-208
			1.60	III	2780	12400	10	6140	Y	C	15	A-128	A-180	A-208
			1.93	III	2780	12400	10	6145	Y	C	15	A-128	A-180	A-208
85.3	7060	798	1.11	I	1920	8550	10	6135	Y	A	17	A-128	A-180	A-208
			1.35	II	2900	12900	10	6140	Y	B	17	A-128	A-180	A-208
			1.60	III	2900	12900	10	6145	Y	C	17	A-128	A-180	A-208
			1.75	III	3390	15100	10	6160	Y	C	17	A-128	A-180	A-208
69.0	8720	985	0.90	-	2030	9050	10	6135	Y		21	A-128	A-180	A-208
			1.27	I	3100	13800	10	6145	Y	A	21	A-128	A-180	A-208
			1.72	III	3640	16200	10	6160	Y	C	21	A-128	A-180	A-208
			2.13	III	3640	16200	10	6165	Y	C	21	A-128	A-180	A-208
58.0	10400	1170	1.05	I	3230	14400	10	6145	Y	A	25	A-128	A-180	A-208
			1.31	II	3790	16900	10	6160	Y	B	25	A-128	A-180	A-208
			1.79	III	3790	16900	10	6165	Y	C	25	A-128	A-180	A-208
50.0	12000	1360	1.00	I	3300	14700	10	6145	Y	A	29	A-128	A-180	A-208
			1.52	II	3950	17600	10	6165	Y	B	29	A-128	A-180	A-208
			1.80	III	4510	20100	10	6170	Y	C	29	A-132	A-180	A-210
41.4	14500	1640	0.84	-	3260	14500	10	6145	Y		35	A-128	A-180	A-208
			1.28	I	4180	18600	10	6165	Y	A	35	A-128	A-180	A-208
			1.49	II	4760	21200	10	6170	Y	B	35	A-132	A-180	A-210
			1.92	III	4760	21200	10	6175	Y	C	35	A-132	A-180	A-210
33.7	17900	2020	1.04	I	4420	19700	10	6165	Y	A	43	A-128	A-180	A-208
			1.51	II	5050	22500	10	6175	Y	B	43	A-132	A-180	A-210
			2.01	III	6890	30700	10	6180	Y	C	43	A-132	A-180	A-210
28.4	21100	2390	0.88	-	4580	20400	10	6165	Y		51	A-128	A-180	A-208
			1.02	I	5250	23400	10	6170	Y	A	51	A-132	A-180	A-210
			1.32	II	5250	23400	10	6175	Y	B	51	A-132	A-180	A-210
			1.60	III	7120	31700	10	6180	Y	C	51	A-132	A-180	A-210
			2.01	III	7120	31700	10	6185	Y	C	51	A-132	A-180	A-210
24.6	24500	2770	1.11	I	5480	24400	10	6175	Y	A	59	A-132	A-180	A-210
			1.30	II	7430	33100	10	6180	Y	B	59	A-132	A-180	A-210
			1.60	III	7430	33100	10	6185	Y	C	59	A-132	A-180	A-210
			2.04	III	10500	46800	10	6190	Y	C	59	A-132	A-180	A-210

Notes: [1] Refer to Technical Information Section for R1 and R2 Model Overhung Load information.
[2] CNHM, CHHM, CNFM, CHFM, CNVM, CVVM are type designations, see page A-3.
[3] Refer to 60 Hz Selection Tables for inverter duty (AV) selections.
[4] For single phase dimensions, type CNHM, see page A-244; type CNVM, see page A-245.
[5] For type CVFM, single reduction, see page A-219; double reduction, see page A-240.

10 HP, 7.5 kW, 50 Hz[3], 1450 RPM

Output Speed	Output Torque		Service Factor		Overhung Load[1]		Selection					Dimension Page[2]		
RPM	in•lb	N•m	SF	AGMA Class	lb	N	HP Symbol	Frame Size	Shaft Spec.	AGMA Class	Ratio	CNHM CHHM[4]	CNVM CVVM[4]	CNFM CHFM[5]
20.4	29500	3330	0.93	-	5770	25700	10	6175	Y		71	A-132	A-180	A-210
			1.17	I	7880	35100	10	6180	Y	A	71	A-132	A-180	A-210
			1.31	II	7880	35100	10	6185	Y	B	71	A-132	A-180	A-210
			1.80	III	11100	49600	10	6190	Y	C	71	A-132	A-180	A-210
16.7	36100	4080	1.15	I	8460	37700	10	6185	Y	A	87	A-132	A-180	A-210
			1.56	II	12000	53300	10	6190	Y	B	87	A-132	A-180	A-210
			1.81	III	12000	53300	10	6195	Y	C	87	A-132	A-180	A-210
13.9	40900	4620	1.06	I	8980	40000	10	6185DB	Y	A	104	A-142	A-192	A-230
			1.59	II	12700	56400	10	6195DB	Y	B	104	A-142	A-192	A-230
12.0	35900	4060	-	-	9360	41700	10	6180DB	Y		121	A-142	A-192	A-230
	47600	5380	0.89	-	9360	41700	10	6185DB	Y		121	A-142	A-192	A-230
			1.19	I	13200	59000	10	6190DB	Y	A	121	A-142	A-192	A-230
			1.41	II	13200	59000	10	6195DB	Y	B	121	A-142	A-192	A-230
			1.59	II	18900	84100	10	6205DB	Y	B	121	A-146	A-196	A-232
			2.12	III	23400	104000	10	6215DB	Y	C	121	A-146	A-196	A-232
10.1	35900	4060	-	-	9360	41700	10	6180DB	Y		143	A-142	A-192	A-230
	43400	4900	-	-	9360	41700	10	6185DB	Y		143	A-142	A-192	A-230
	56300	6360	1.20	I	13200	58700	10	6195DB	Y	A	143	A-142	A-192	A-230
8.79	43500	4920	-	-	9360	41700	10	6185DB	Y		165	A-142	A-192	A-230
	64900	7340	1.08	I	13100	58500	10	6195DB	Y	A	165	A-142	A-192	A-230
			1.26	I	18900	84100	10	6205DB	Y	A	165	A-146	A-196	A-232
			1.59	II	23400	104000	10	6215DA	Y	B	165	A-146	A-196	A-232
			1.66	III	23400	104000	10	6215DB	Y	C	165	A-146	A-196	A-232
			1.97	III	27800	124000	10	6225DB	Y	C	165	A-146	A-196	A-232
7.44	56500	6380	-	-	13200	58900	10	6190DB	Y		195	A-142	A-192	A-230
	76700	8670	0.91	-	13000	58000	10	6195DB	Y		195	A-142	A-192	A-230
			1.07	I	18900	84100	10	6205DB	Y	A	195	A-146	A-196	A-232
			1.40	II	23400	104000	10	6215DA	Y	B	195	A-146	A-196	A-232
			1.67	III	29200	130000	10	6225DB	Y	C	195	A-146	A-196	A-232
			2.26	III	36400	162000	10	6235DA	Y	C	195	A-146	A-196	A-236
6.28	56500	6380	-	-	13200	59000	10	6190DB	Y		231	A-142	A-192	A-230
	70400	7960	-	-	13200	59000	10	6195DB	Y		231	A-142	A-192	A-230
	91100	10300	0.90	-	18900	84100	10	6205DB	Y		231	A-146	A-196	A-232
			1.22	I	23400	104000	10	6215DA	Y	A	231	A-146	A-196	A-232
			1.44	II	31000	138000	10	6225DA	Y	B	231	A-146	A-196	A-232
			1.84	III	38800	173000	10	6235DA	Y	C	231	A-146	A-196	A-236
5.31	70400	7960	-	-	13200	59000	10	6195DB	Y		273	A-142	A-192	A-230
	82000	9270	-	-	18900	84100	10	6205DB	Y		273	A-146	A-196	A-232
	107000	12100	1.03	I	23400	104000	10	6215DA	Y	A	273	A-146	A-196	A-232
			1.22	I	32600	145000	10	6225DA	Y	A	273	A-146	A-196	A-232
			1.56	II	40200	179000	10	6235DA	Y	B	273	A-146	A-196	A-236
			2.13	III	45400	202000	10	6245DA	Y	C	273	A-150	A-200	A-236
4.55	126000	14200	0.89	-	23400	104000	10	6215DA	Y		319	A-146	A-196	A-232
			1.06	I	32600	145000	10	6225DA	Y	A	319	A-146	A-196	A-232
			1.33	II	40200	179000	10	6235DA	Y	B	319	A-146	A-196	A-236
			1.82	III	46700	208000	10	6245DA	Y	C	319	A-150	A-200	A-236

Notes: [1] Refer to Technical Information Section for R1 and R2 Model Overhung Load information.
[2] CNHM, CHHM, CNFM, CHFM, CNVM, CVVM are type designations, see page A-3.
[3] Refer to 60 Hz Selection Tables for inverter duty (AV) selections.
[4] For single phase dimensions, type CNHM, see page A-244; type CNVM, see page A-245.
[5] For type CVFM, single reduction, see page A-219; double reduction, see page A-240.

SELECTION TABLES – 50 Hz

10 HP, 7.5 kW, 50 Hz[3], 1450 RPM

Output Speed	Output Torque		Service Factor		Overhung Load[1]		Selection					Dimension Page[2]		
RPM	in•lb	N•m	SF	AGMA Class	lb	N	HP Symbol	Frame Size	Shaft Spec.	AGMA Class	Ratio	CNHM CHHM[4]	CNVM CVVM[4]	CNFM CHFM[5]
3.85	112000	12700	-	-	23400	104000	10	6215DA	Y		377	A-146	A-196	A-232
	149000	16800	0.90	-	32600	145000	10	6225DA	Y		377	A-146	A-196	A-232
			1.13	I	40200	179000	10	6235DA	Y	A	377	A-146	A-196	A-236
			1.54	II	46700	208000	10	6245DA	Y	B	377	A-150	A-200	A-236
			1.94	III	57900	258000	10	6255DA	Y	C	377	A-150	A-200	A-236
3.07	142000	16000	-	-	32600	145000	10	6225DA	Y		473	A-146	A-196	A-232
	186000	21000	0.97	-	40200	179000	10	6235DA	Y		473	A-146	A-196	A-236
			1.23	I	46700	208000	10	6245DA	Y	A	473	A-150	A-200	A-236
			1.64	III	57900	258000	10	6255DA	Y	C	473	A-150	A-200	A-236
			2.19	III	62000	276000	10	6265DA	Y	C	473	A-150	A-200	A-236
2.59	142000	16000	-	-	32600	145000	10	6225DA	Y		559	A-146	A-196	A-232
	220000	24900	0.82	-	40200	179000	10	6235DA	Y		559	A-146	A-196	A-236
			1.04	I	46700	208000	10	6245DA	Y	A	559	A-150	A-200	A-236
			1.39	II	57900	258000	10	6255DA	Y	B	559	A-150	A-200	A-236
			1.85	III	62000	276000	10	6265DA	Y	C	559	A-150	A-200	A-236
2.23	181000	20500	-	-	40200	179000	10	6235DA	Y		649	A-146	A-196	A-236
	256000	28900	0.89	-	46700	208000	10	6245DA	Y		649	A-150	A-200	A-236
			1.20	I	57900	258000	10	6255DA	Y	A	649	A-150	A-200	A-236
			1.59	II	62000	276000	10	6265DA	Y	B	649	A-150	A-200	A-236
			2.36	III	55700	248000	10	6275DA	Y	C	649	A-150	A-200	[6]
1.98	181000	20500	-	-	40200	179000	10	6235DA	Y		731	A-146	A-196	A-236
	228000	25800	-	-	46700	208000	10	6245DA	Y		731	A-150	A-200	A-236
	288000	32500	1.06	I	57900	258000	10	6255DA	Y	A	731	A-150	A-200	A-236
			1.42	II	62000	276000	10	6265DA	Y	B	731	A-150	A-200	A-236
			2.10	III	55700	248000	10	6275DA	Y	C	731	A-150	A-200	[6]
1.72	228000	25800	-	-	46700	208000	10	6245DA	Y		841	A-150	A-200	A-236
	331000	37400	0.87	-	57900	258000	10	6255DA	Y		841	A-150	A-200	A-236
			1.23	I	62000	276000	10	6265DA	Y	A	841	A-150	A-200	A-236
			1.82	III	55700	248000	10	6275DA	Y	C	841	A-150	A-200	[6]
1.45	305000	34500	-	-	57900	258000	10	6255DA	Y		1003	A-150	A-200	A-236
	395000	44600	1.03	I	62000	276000	10	6265DA	Y	A	1003	A-150	A-200	A-236
			1.53	II	55700	248000	10	6275DA	Y	B	1003	A-150	A-200	[6]
1.16	305000	34500	-	-	57900	258000	10	6255DA	Y		1247	A-150	A-200	A-236
	490000	55400	0.83	-	62000	276000	10	6265DA	Y		1247	A-150	A-200	A-236
			1.23	I	55700	248000	10	6275DA	Y	A	1247	A-150	A-200	[6]
0.980	389000	44000	-	-	62000	276000	10	6265DA	Y		1479	A-150	A-200	A-236
	582000	65800	1.04	I	55500	247000	10	6275DA	Y	A	1479	A-150	A-200	[6]
0.784	727000	82200	0.83	-	55700	248000	10	6275DA	Y		1849	A-150	A-200	[6]
	603000	68200	-	-	55700	248000	10	6275DA	Y		1849	A-150	A-200	[6]
0.702	603000	68200	-	-	55700	248000	10	6275DA	Y		2065	A-150	A-200	[6]
0.572	603000	68200	-	-	55700	248000	10	6275DA	Y		2537	A-150	A-200	[6]
0.476	603000	68200	-	-	55000	245000	10	6275DA	Y		3045	A-150	A-200	[6]
0.417	603000	68200	-	-	55700	248000	10	6275DA	Y		3481	A-150	A-200	[6]
0.327	603000	68200	-	-	55000	245000	10	6275DA	Y		4437	A-150	A-200	[6]
0.282	603000	68200	-	-	55000	245000	10	6275DA	Y		5133	A-150	A-200	[6]
0.235	603000	68200	-	-	55000	245000	10	6275DA	Y		6177	A-150	A-200	[6]
0.192	603000	68200	-	-	55000	245000	10	6275DA	Y		7569	A-150	A-200	[6]

Notes: [1] Refer to Technical Information Section for R1 and R2 Model Overhung Load information.
[2] CNHM, CHHM, CNFM, CHFM, CNVM, CVVM are type designations, see page A-3.
[3] Refer to 60 Hz Selection Tables for inverter duty (AV) selections.
[4] For single phase dimensions, type CNHM, see page A-244; type CNVM, see page A-245.
[5] For type CVFM, single reduction, see page A-219; double reduction, see page A-240.
[6] Consult factory for frame size 6275DA.

15 HP, 11 kW, 50 Hz[3], 1450 RPM

Output Speed	Output Torque		Service Factor		Overhung Load[1]		Selection					Dimension Page[2]		
RPM	in•lb	N•m	SF	AGMA Class	lb	N	HP Symbol	Frame Size	Shaft Spec.	AGMA Class	Ratio	CNHM CHHM[4]	CNVM CVVM[4]	CNFM CHFM[5]
242	3650	413	1.03	I	1310	5840	15	6135	Y	A	6	A-128	A-180	A-208
			1.37	II	2080	9270	15	6145	Y	B	6	A-128	A-180	A-208
			1.85	III	2340	10400	15	6160	Y	C	6	A-128	A-180	A-208
181	4880	551	1.03	I	1450	6480	15	6135	Y	A	8	A-128	A-180	A-208
			1.37	II	2310	10300	15	6145	Y	B	8	A-128	A-180	A-208
			1.79	III	2600	11600	15	6160	Y	C	8	A-128	A-180	A-208
132	6700	757	1.03	I	1650	7360	15	6135	Y	A	11	A-128	A-180	A-208
			1.37	II	2580	11500	15	6145	Y	B	11	A-128	A-180	A-208
			1.79	III	2940	13100	15	6160	Y	C	11	A-128	A-180	A-208
112	7920	895	0.93	-	1710	7630	15	6135	Y		13	A-128	A-180	A-208
			1.18	I	2630	11700	15	6140	Y	A	13	A-128	A-180	A-208
			1.37	II	2630	11700	15	6145	Y	B	13	A-128	A-180	A-208
			1.79	III	3080	13700	15	6160	Y	C	13	A-128	A-180	A-208
96.7	9110	1030	0.82	-	1740	7740	15	6135	Y		15	A-128	A-180	A-208
			1.09	I	2760	12300	15	6140	Y	A	15	A-128	A-180	A-208
			1.32	II	2760	12300	15	6145	Y	B	15	A-128	A-180	A-208
			1.70	III	3260	14500	15	6160	Y	C	15	A-128	A-180	A-208
			2.04	III	3260	14500	15	6165	Y	C	15	A-128	A-180	A-208
85.3	10400	1170	1.09	I	2870	12800	15	6145	Y	A	17	A-128	A-180	A-208
			1.71	III	3350	14900	15	6165	Y	C	17	A-128	A-180	A-208
			1.79	III	3790	16900	15	6170	Y	C	17	A-132	A-180	A-210
69.0	12800	1450	0.86	-	3050	13600	15	6145	Y		21	A-128	A-180	A-208
			1.17	I	3570	15900	15	6160	Y	A	21	A-128	A-180	A-208
			1.45	II	3570	15900	15	6165	Y	B	21	A-128	A-180	A-208
			1.69	III	4090	18200	15	6170	Y	C	21	A-132	A-180	A-210
			2.15	III	4090	18200	15	6175	Y	C	21	A-132	A-180	A-210
58.0	15200	1720	1.22	I	3730	16600	15	6165	Y	A	25	A-128	A-180	A-208
			1.42	II	4220	18800	15	6170	Y	B	25	A-132	A-180	A-210
			1.77	III	4220	18800	15	6175	Y	C	25	A-132	A-180	A-210
50.0	17700	2000	1.04	I	3860	17200	15	6165	Y	A	29	A-128	A-180	A-208
			1.58	II	4450	19800	15	6175	Y	B	29	A-132	A-180	A-210
			1.77	III	5970	26600	15	6180	Y	C	29	A-132	A-180	A-210
41.4	21300	2410	0.87	-	4060	18100	15	6165	Y		35	A-128	A-180	A-208
			1.02	I	4690	20900	15	6170	Y	A	35	A-132	A-180	A-210
			1.31	II	4690	20900	15	6175	Y	B	35	A-132	A-180	A-210
			1.68	III	6380	28400	15	6180	Y	C	35	A-132	A-180	A-210
			2.05	III	6380	28400	15	6185	Y	C	35	A-132	A-180	A-210
33.7	26200	2960	1.03	I	4960	22100	15	6175	Y	A	43	A-132	A-180	A-210
			1.37	II	6800	30300	15	6180	Y	B	43	A-132	A-180	A-210
			1.69	III	6800	30300	15	6185	Y	C	43	A-132	A-180	A-210
			1.90	III	9560	42600	15	6190	Y	C	43	A-132	A-180	A-210
28.4	31100	3510	0.90	-	5140	22900	15	6175	Y		51	A-132	A-180	A-210
			1.09	I	7030	31300	15	6180	Y	A	51	A-132	A-180	A-210
			1.37	II	7030	31300	15	6185	Y	B	51	A-132	A-180	A-210
			1.65	III	9970	44400	15	6190	Y	C	51	A-132	A-180	A-210
			1.90	III	9970	44400	15	6195	Y	C	51	A-132	A-180	A-210

Notes: [1] Refer to Technical Information Section for R1 and R2 Model Overhung Load information.
[2] CNHM, CHHM, CNFM, CHFM, CNVM, CVVM are type designations, see page A-3.
[3] Refer to 60 Hz Selection Tables for inverter duty (AV) selections.
[4] For single phase dimensions, type CNHM, see page A-244; type CNVM, see page A-245.
[5] For type CVFM, single reduction, see page A-219; double reduction, see page A-240.

SELECTION TABLES – 50 Hz

15 HP, 11 kW, 50 Hz[3], 1450 RPM

Output Speed	Output Torque		Service Factor		Overhung Load[1]		Selection					Dimension Page[2]		
RPM	in•lb	N•m	SF	AGMA Class	lb	N	HP Symbol	Frame Size	Shaft Spec.	AGMA Class	Ratio	CNHM CHHM[4]	CNVM CVVM[4]	CNFM CHFM[5]
24.6	35900	4060	1.09	I	7340	32700	15	6185	Y	A	59	A-132	A-180	A-210
			1.39	II	10400	46400	15	6190	Y	B	59	A-132	A-180	A-210
			1.71	III	10400	46400	15	6195	Y	C	59	A-132	A-180	A-210
			2.05	III	18900	84100	15	6205	Y	C	59	A-132	A-184	A-214
20.4	43300	4890	0.89	-	7750	34500	15	6185	Y		71	A-132	A-180	A-210
			1.23	I	11000	49100	15	6190	Y	A	71	A-132	A-180	A-210
			1.42	II	11000	49100	15	6195	Y	B	71	A-132	A-180	A-210
16.7	53000	5990	1.24	I	11800	52700	15	6195	Y	A	87	A-132	A-180	A-210
			1.45	II	18900	84100	15	6205	Y	B	87	A-132	A-184	A-214
			1.79	III	21700	96600	15	6215	Y	C	87	A-136	A-184	A-214
13.9	35900	4060	-	-	9030	40200	15	6180DB	Y		104	A-142	A-192	A-230
	43400	4900	-	-	8960	39900	15	6185DB	Y		104	A-142	A-192	A-230
	60000	6780	1.08	I	12500	55600	15	6195DB	Y	A	104	A-142	A-192	A-230
12.0	42600	4810	-	-	9360	41700	15	6185DB	Y		121	A-142	A-192	A-230
	56500	6380	-	-	13200	59000	15	6190DB	Y		121	A-142	A-192	A-230
	69800	7890	0.96	-	13200	59000	15	6195DB	Y		121	A-142	A-192	A-230
			1.08	I	18900	84100	15	6205DB	Y	A	121	A-146	A-196	A-232
			1.44	II	23400	104000	15	6215DB	Y	B	121	A-146	A-196	A-232
			1.71	III	25600	114000	15	6225DB	Y	C	121	A-146	A-196	A-232
			2.31	III	32100	143000	15	6235DA	Y	C	121	A-146	A-196	A-236
10.1	56500	6380	-	-	13200	58700	15	6190DB	Y		143	A-142	A-192	A-230
	82500	9320	0.82	-	12900	57600	15	6195DB	Y		143	A-142	A-192	A-230
8.79	56500	6380	-	-	13200	58900	15	6190DB	Y		165	A-142	A-192	A-230
	70000	7910	-	-	13100	58300	15	6195DB	Y		165	A-142	A-192	A-230
	95600	10800	0.86	-	18900	84100	15	6205DB	Y		165	A-146	A-196	A-232
			1.13	I	23400	104000	15	6215DA	Y	A	165	A-146	A-196	A-232
			1.35	II	27600	123000	15	6225DB	Y	B	165	A-146	A-196	A-232
			1.82	III	34400	153000	15	6235DA	Y	C	165	A-146	A-196	A-236
7.44	70000	7910	-	-	13100	58300	15	6195DB	Y		195	A-142	A-192	A-230
	82000	9270	-	-	18900	84100	15	6205DB	Y		195	A-146	A-196	A-232
	112000	12700	0.96	-	23400	104000	15	6215DA	Y		195	A-146	A-196	A-232
			1.14	I	29000	129000	15	6225DB	Y	A	195	A-146	A-196	A-232
			1.54	II	36100	161000	15	6235DA	Y	B	195	A-146	A-196	A-236
			2.06	III	40400	180000	15	6245DA	Y	C	195	A-150	A-200	A-236
6.28	82000	9270	-	-	18900	84100	15	6205DB	Y		231	A-146	A-196	A-232
	134000	15100	0.83	-	23400	104000	15	6215DA	Y		231	A-146	A-196	A-232
			1.25	I	38600	172000	15	6235DA	Y	A	231	A-146	A-196	A-236
			1.71	III	42900	191000	15	6245DA	Y	C	231	A-150	A-200	A-236
			2.06	III	52300	233000	15	6255DA	Y	C	231	A-150	A-200	A-236
5.31	111000	12500	-	-	23400	104000	15	6215DA	Y		273	A-146	A-196	A-232
	157000	17800	0.83	-	32300	144000	15	6225DA	Y		273	A-146	A-196	A-232
			1.06	I	40200	179000	15	6235DA	Y	A	273	A-146	A-196	A-236
			1.45	II	45100	201000	15	6245DA	Y	B	273	A-150	A-200	A-236
			1.74	III	55000	245000	15	6255DA	Y	C	273	A-150	A-200	A-236
			2.58	III	62000	276000	15	6265DA	Y	C	273	A-150	A-200	A-236

Notes: [1] Refer to Technical Information Section for R1 and R2 Model Overhung Load information.
[2] CNHM, CHHM, CNFM, CHFM, CNVM, CVVM are type designations, see page A-3.
[3] Refer to 60 Hz Selection Tables for inverter duty (AV) selections.
[4] For single phase dimensions, type CNHM, see page A-244; type CNVM, see page A-245.
[5] For type CVFM, single reduction, see page A-219; double reduction, see page A-240.

15 HP, 11 kW, 50 Hz[3], 1450 RPM

Output Speed	Output Torque		Service Factor		Overhung Load[1]		Selection					Dimension Page[2]		
RPM	in•lb	N•m	SF	AGMA Class	lb	N	HP Symbol	Frame Size	Shaft Spec.	AGMA Class	Ratio	CNHM CHHM[4]	CNVM CVVM[4]	CNFM CHFM[5]
4.55	112000	12700	-	-	23400	104000	15	6215DA	Y		319	A-146	A-196	A-232
	133000	15000	-	-	32600	145000	15	6225DA	Y		319	A-146	A-196	A-232
	184000	20800	0.91	-	40200	179000	15	6235DA	Y		319	A-146	A-196	A-236
			1.24	I	46700	208000	15	6245DA	Y	A	319	A-150	A-200	A-236
			1.56	II	57900	258000	15	6255DA	Y	B	319	A-150	A-200	A-236
			2.21	III	62000	276000	15	6265DA	Y	C	319	A-150	A-200	A-236
3.85	133000	15000	-	-	32600	145000	15	6225DA	Y		377	A-146	A-196	A-232
	167000	18900	-	-	40200	179000	15	6235DA	Y		377	A-146	A-196	A-236
	218000	24600	1.05	I	46700	208000	15	6245DA	Y	A	377	A-150	A-200	A-236
			1.32	II	57900	258000	15	6255DA	Y	B	377	A-150	A-200	A-236
			1.87	III	62000	276000	15	6265DA	Y	C	377	A-150	A-200	A-236
3.07	181000	20500	-	-	40200	179000	15	6235DA	Y		473	A-146	A-196	A-236
	273000	30800	0.84	-	46700	208000	15	6245DA	Y		473	A-150	A-200	A-236
			1.12	I	57900	258000	15	6255DA	Y	A	473	A-150	A-200	A-236
			1.49	II	62000	276000	15	6265DA	Y	B	473	A-150	A-200	A-236
			2.21	III	55700	248000	15	6275DA	Y	C	473	A-150	A-200	[6]
2.59	228000	25800	-	-	46700	208000	15	6245DA	Y		559	A-150	A-200	A-236
	322000	36400	0.95	-	57900	258000	15	6255DA	Y		559	A-150	A-200	A-236
			1.26	I	62000	276000	15	6265DA	Y	A	559	A-150	A-200	A-236
			1.87	III	55700	248000	15	6275DA	Y	C	559	A-150	A-200	[6]
2.23	228000	25800	-	-	46700	208000	15	6245DA	Y		649	A-150	A-200	A-236
	374000	42300	0.82	-	57900	258000	15	6255DA	Y		649	A-150	A-200	A-236
			1.09	I	62000	276000	15	6265DA	Y	A	649	A-150	A-200	A-236
			1.61	III	55700	248000	15	6275DA	Y	C	649	A-150	A-200	[6]
1.98	305000	34500	-	-	57900	258000	15	6255DA	Y		731	A-150	A-200	A-236
	422000	47700	0.97	-	62000	276000	15	6265DA	Y		731	A-150	A-200	A-236
			1.43	II	55700	248000	15	6275DA	Y	B	731	A-150	A-200	[6]
1.72	288000	32500	-	-	57900	258000	15	6255DA	Y		841	A-150	A-200	A-236
	485000	54800	0.84	-	62000	276000	15	6265DA	Y		841	A-150	A-200	A-236
			1.24	I	55700	248000	15	6275DA	Y	A	841	A-150	A-200	[6]
1.45	407000	46000	-	-	62000	276000	15	6265DA	Y		1003	A-150	A-200	A-236
	579000	65400	1.04	I	55700	248000	15	6275DA	Y	A	1003	A-150	A-200	[6]
1.16	719000	81300	0.84	-	55700	248000	15	6275DA	Y		1247	A-150	A-200	[6]
0.980	603000	68200	-	-	55000	245000	15	6275DA	Y		1479	A-150	A-200	[6]

Notes: [1] Refer to Technical Information Section for R1 and R2 Model Overhung Load information.
[2] CNHM, CHHM, CNFM, CHFM, CNVM, CVVM are type designations, see page A-3.
[3] Refer to 60 Hz Selection Tables for inverter duty (AV) selections.
[4] For single phase dimensions, type CNHM, see page A-244; type CNVM, see page A-245.
[5] For type CVFM, single reduction, see page A-219; double reduction, see page A-240.
[6] Consult factory for frame size 6275DA.

SELECTION TABLES – 50 Hz

20 HP, 15 kW, 50 Hz[3], 1450 (980 RPM where noted)

Output Speed	Output Torque		Service Factor		Overhung Load[1]		Selection					Dimension Page[2]		
RPM	in•lb	N•m	SF	AGMA Class	lb	N	HP Symbol	Frame Size[6]	Shaft Spec.	AGMA Class	Ratio	CNHM CHHM[4]	CNVM CVVM[4]	CNFM CHFM[5]
242	4980	563	1.01	I	2070	9200	20	6145[H]	Y	A	6	A-128	A-180	A-208
			1.35	II	2290	10200	20	6160	Y	B	6	A-128	A-180	A-208
			1.61	III	2290	10200	20	6165[H]	Y	C	6	A-128	A-180	A-208
			1.84	III	2600	11600	20	6170	Y	C	6	A-132	A-180	A-210
181	6640	751	1.01	I	2290	10200	20	6145[H]	Y	A	8	A-128	A-180	A-208
			1.31	II	2560	11400	20	6160	Y	B	8	A-128	A-180	A-208
			1.61	III	2560	11400	20	6165[H]	Y	C	8	A-128	A-180	A-208
			1.84	III	2870	12800	20	6170	Y	C	8	A-132	A-180	A-210
132	9110	1030	1.01	I	2560	11400	20	6145[H]	Y	A	11	A-128	A-180	A-208
			1.31	II	2900	12900	20	6160	Y	B	11	A-128	A-180	A-208
			1.61	III	2900	12900	20	6165[H]	Y	C	11	A-128	A-180	A-208
			1.84	III	3300	14700	20	6170	Y	C	11	A-132	A-180	A-210
112	10800	1220	1.01	I	2600	11600	20	6145[H]	Y	A	13	A-128	A-180	A-208
			1.51	II	3030	13500	20	6165[H]	Y	B	13	A-128	A-180	A-208
			1.82	III	3440	15300	20	6170	Y	C	13	A-132	A-180	A-210
96.7	12500	1410	0.97	-	2720	12100	20	6145[H]	Y		15	A-128	A-180	A-208
			1.25	I	3190	14200	20	6160	Y	A	15	A-128	A-180	A-208
			1.49	II	3190	14200	20	6165[H]	Y	B	15	A-128	A-180	A-208
			1.70	III	3610	16100	20	6170	Y	C	15	A-132	A-180	A-210
			2.01	III	3610	16100	20	6175	Y	C	15	A-132	A-180	A-210
85.3	14200	1600	0.80	-	2830	12600	20	6145[H]	Y		17	A-128	A-180	A-208
			1.25	I	3280	14600	20	6165[H]	Y	A	17	A-128	A-180	A-208
			1.31	II	3750	16700	20	6170	Y	B	17	A-132	A-180	A-210
			1.61	III	3750	16700	20	6175	Y	C	17	A-132	A-180	A-210
			2.04	III	5100	22700	20	6180	Y	C	17	A-132	A-180	A-210
69.0	17400	1970	1.07	I	3500	15600	20	6165[H]	Y	A	21	A-128	A-180	A-208
			1.57	II	4020	17900	20	6175	Y	B	21	A-132	A-180	A-210
			2.00	III	5460	24300	20	6180	Y	C	21	A-132	A-180	A-210
58.0	20800	2350	0.89	-	3640	16200	20	6165[H]	Y		25	A-128	A-180	A-208
			1.04	I	4150	18500	20	6170	Y	A	25	A-132	A-180	A-210
			1.30	II	4150	18500	20	6175	Y	B	25	A-132	A-180	A-210
			1.61	III	5680	25300	20	6180	Y	C	25	A-132	A-180	A-210
			2.01	III	5680	25300	20	6185	Y	C	25	A-132	A-180	A-210
50.0	24100	2720	1.16	I	4360	19400	20	6175	Y	A	29	A-132	A-180	A-210
			1.30	II	5930	26400	20	6180	Y	B	29	A-132	A-180	A-210
			1.61	III	5930	26400	20	6185	Y	C	29	A-132	A-180	A-210
			2.05	III	8400	37400	20	6190	Y	C	29	A-132	A-180	A-210
41.4	29000	3280	0.96	-	4580	20400	20	6175	Y		35	A-132	A-180	A-210
			1.23	I	6310	28100	20	6180	Y	A	35	A-132	A-180	A-210
			1.51	II	6310	28100	20	6185	Y	B	35	A-132	A-180	A-210
			1.62	III	8850	39400	20	6190	Y	C	35	A-132	A-180	A-210
			2.01	III	8850	39400	20	6195	Y	C	35	A-132	A-180	A-210
33.7	35700	4040	1.24	I	6710	29900	20	6185	Y	A	43	A-132	A-180	A-210
			1.39	II	9500	42300	20	6190	Y	B	43	A-132	A-180	A-210
			1.81	III	9500	42300	20	6195	Y	C	43	A-132	A-180	A-210
28.4	42400	4790	1.01	I	6940	30900	20	6185	Y	A	51	A-132	A-180	A-210
			1.39	II	9900	44100	20	6195	Y	B	51	A-132	A-180	A-210

Notes: [1] Refer to Technical Information Section for R1 and R2 Model Overhung Load information.
[2] CNHM, CHHM, CNFM, CHFM, CNVM, CVVM are type designations, see page A-3.
[3] Refer to 60 Hz Selection Tables for inverter duty (AV) selections.
[4] For single phase dimensions, type CNHM, see page A-244; type CNVM, see page A-245.
[5] For type CVFM, single reduction, see page A-219; double reduction, see page A-240.
[6] [H] indicates a high center height unit.

20 HP, 15 kW, 50 Hz[3], 1450 (980 RPM where noted)

Output Speed	Output Torque		Service Factor		Overhung Load[1]		Selection					Dimension Page[2]		
RPM	in•lb	N•m	SF	AGMA Class	lb	N	HP Symbol	Frame Size	Shaft Spec.	AGMA Class	Ratio	CNHM CHHM[4]	CNVM CVVM[4]	CNFM CHFM[5]
24.6	49000	5540	0.80	-	7210	32100	20	6185	Y		59	A-132	A-180	A-210
			1.25	I	10300	46000	20	6195	Y	A	59	A-132	A-180	A-210
			1.51	II	18900	84100	20	6205	Y	B	59	A-132	A-184	A-214
			2.26	III	19300	85900	20	6215	Y	C	59	A-136	A-184	A-214
20.4	58900	6660	1.04	I	10900	48600	20	6195	Y	A	71	A-132	A-180	A-210
16.7	72300	8170	0.91	-	11700	52100	20	6195	Y		87	A-132	A-180	A-210
			1.06	I	18900	84100	20	6205	Y	A	87	A-132	A-184	A-214
			1.31	II	21600	96100	20	6215	Y	B	87	A-136	A-184	A-214
16.6	72500	8190	1.13	I	18900	84100	206	6205	Y	A	59	A-132	A-184	A-214
			1.55	II	21600	96200	206	6215	Y	B	59	A-136	A-184	A-214
			1.94	III	22900	102000	206	6225	Y	C	59	A-136	A-184	A-214
13.9	56500	6380	-	-	12500	55800	20	6190DB	Y		104	A-142	A-192	A-230
	81800	9250	0.80	-	12300	54700	20	6195DB	Y		104	A-142	A-192	A-230
12.0	67100	7580	-	-	13200	59000	20	6195DB	Y		121	A-142	A-192	A-230
	95600	10800	0.80	-	18900	84100	20	6205DB	Y		121	A-146	A-196	A-232
			1.06	I	23400	104000	20	6215DB	Y	A	121	A-146	A-196	A-232
			1.25	I	25400	113000	20	6225DB	Y	A	121	A-146	A-196	A-232
			1.69	III	31900	142000	20	6235DA	Y	C	121	A-146	A-196	A-236
			1.91	III	35700	159000	20	6245DB	Y	C	121	A-150	A-200	A-236
11.3	107000	12100	1.25	I	25600	114000	206	6225	Y	A	87	A-136	A-184	A-214
			1.42	II	31900	142000	206	6235	Y	B	87	A-136	A-184	A-214
			1.87	III	35700	159000	206	6245	Y	C	87	A-136	A-188	A-214
8.79	82000	9270	-	-	18900	84100	20	6205DB	Y		165	A-146	A-196	A-232
	130000	14700	0.80	-	23400	104000	20	6215DA	Y		165	A-146	A-196	A-232
			1.34	II	34100	152000	20	6235DA	Y	B	165	A-146	A-196	A-236
			1.69	III	38200	170000	20	6245DA	Y	C	165	A-150	A-200	A-236
			1.79	III	38200	170000	20	6245DB	Y	C	165	A-150	A-200	A-236
7.44	108000	12200	-	-	23400	104000	20	6215DA	Y		195	A-146	A-196	A-232
	111000	12500	-	-	29000	129000	20	6225DA	Y		195	A-146	A-196	A-232
	153000	17300	0.84	-	28700	128000	20	6225DB	Y		195	A-146	A-196	A-232
			1.13	I	35900	160000	20	6235DA	Y	A	195	A-146	A-196	A-236
			1.51	II	40200	179000	20	6245DA	Y	B	195	A-150	A-200	A-236
			1.80	III	49200	219000	20	6255DA	Y	C	195	A-150	A-200	A-236
6.28	131000	14800	-	-	30800	137000	20	6225DA	Y		231	A-146	A-196	A-232
	181000	20500	0.92	-	38400	171000	20	6235DA	Y		231	A-146	A-196	A-236
			1.26	I	42700	190000	20	6245DA	Y	A	231	A-150	A-200	A-236
			1.51	II	52100	232000	20	6255DA	Y	B	231	A-150	A-200	A-236
			2.24	III	62000	276000	20	6265DA	Y	C	231	A-150	A-200	A-236
5.31	167000	18900	-	-	40200	179000	20	6235DA	Y		273	A-146	A-196	A-236
	215000	24300	1.06	I	44900	200000	20	6245DA	Y	A	273	A-150	A-200	A-236
			1.28	I	55500	247000	20	6255DA	Y	A	273	A-150	A-200	A-236
			1.90	III	62000	276000	20	6265DA	Y	C	273	A-150	A-200	A-236
4.55	167000	18900	-	-	40200	179000	20	6235DA	Y		319	A-146	A-196	A-236
	251000	28400	0.91	-	46700	208000	20	6245DA	Y		319	A-150	A-200	A-236
			1.14	I	57500	256000	20	6255DA	Y	A	319	A-150	A-200	A-236
			1.62	III	62000	276000	20	6265DA	Y	C	319	A-150	A-200	A-236
			2.40	III	55700	248000	20	6275DA	Y	C	319	A-150	A-200	[6]

Notes: [1] Refer to Technical Information Section for R1 and R2 Model Overhung Load information.
[2] CNHM, CHHM, CNFM, CHFM, CNVM, CVVM are type designations, see page A-3.
[3] Refer to 60 Hz Selection Tables for inverter duty (AV) selections.
[4] For single phase dimensions, type CNHM, see page A-244; type CNVM, see page A-245.
[5] For type CVFM, single reduction, see page A-219; double reduction, see page A-240.
[6] Consult factory for frame size 6275DA.

25 HP, 18.5 kW, 50 Hz[3], 1450 (980 RPM where noted)

Output Speed	Output Torque		Service Factor		Overhung Load[1]		Selection					Dimension Page[2]		
RPM	in•lb	N•m	SF	AGMA Class	lb	N	HP Symbol	Frame Size	Shaft Spec.	AGMA Class	Ratio	CNHM CHHM[4]	CNVM CVVM[4]	CNFM CHFM[5]
69.0	21500	2430	1.28	I	3970	17700	25	6175	Y	A	21	A-132	A-180	A-210
			1.62	III	5430	24200	25	6180	Y	C	21	A-132	A-180	A-210
			2.06	III	5430	24200	25	6185	Y	C	21	A-132	A-180	A-210
58.0	25600	2890	1.05	I	4090	18200	25	6175	Y	A	25	A-132	A-180	A-210
			1.30	II	5640	25100	25	6180	Y	B	25	A-132	A-180	A-210
			1.63	III	5640	25100	25	6185	Y	C	25	A-132	A-180	A-210
			1.90	III	7950	35400	25	6190	Y	C	25	A-132	A-180	A-210
50.0	29700	3360	0.94	-	4270	19000	25	6175	Y		29	A-132	A-180	A-210
			1.05	I	5860	26100	25	6180	Y	A	29	A-132	A-180	A-210
			1.30	II	5860	26100	25	6185	Y	B	29	A-132	A-180	A-210
			1.66	III	8350	37200	25	6190	Y	C	29	A-132	A-180	A-210
			2.04	III	8350	37200	25	6195	Y	C	29	A-132	A-180	A-210
41.4	35800	4050	1.22	I	6240	27800	25	6185	Y	A	35	A-132	A-180	A-210
			1.31	II	8800	39200	25	6190	Y	B	35	A-132	A-180	A-210
			1.63	III	8800	39200	25	6195	Y	C	35	A-132	A-180	A-210
33.7	44100	4980	1.01	I	6620	29500	25	6185	Y	A	43	A-132	A-180	A-210
			1.46	II	9430	42000	25	6195	Y	B	43	A-132	A-180	A-210
			1.72	III	17400	77300	25	6205	Y	C	43	A-132	A-184	A-214
			2.44	III	17700	78900	25	6215	Y	C	43	A-136	A-184	A-214
28.4	52200	5900	0.82	-	6830	30400	25	6185	Y		51	A-132	A-180	A-210
			1.13	I	9810	43700	25	6195	Y	A	51	A-132	A-180	A-210
24.6	60400	6830	1.02	I	10300	45700	25	6195	Y	A	59	A-132	A-180	A-210
			1.22	I	18700	83500	25	6205	Y	A	59	A-132	A-184	A-214
			1.83	III	19200	85600	25	6215	Y	C	59	A-136	A-184	A-214
22.8	65100	7360	1.08	I	10600	47400	256	6195	Y	A	43	A-132	A-180	A-210
			1.72	III	19800	88400	256	6215	Y	C	43	A-136	A-184	A-214
			2.17	III	21000	93700	256	6225	Y	C	43	A-136	A-184	A-214
20.4	72700	8220	0.84	-	10800	48100	25	6195	Y		71	A-132	A-180	A-210
16.7	89400	10100	1.06	I	21500	95600	25	6215	Y	A	87	A-136	A-184	A-214
			1.44	II	22700	101000	25	6225	Y	B	87	A-136	A-184	A-214
16.6	89400	10100	1.25	I	21500	95700	256	6215	Y	A	59	A-136	A-184	A-214
			1.57	II	22900	102000	256	6225	Y	B	59	A-136	A-184	A-214
			1.87	III	28500	127000	256	6235	Y	C	59	A-136	A-184	A-214
12.0	118000	13300	0.86	-	23400	104000	25	6215DB	Y		121	A-146	A-196	A-232
			1.01	I	25400	113000	25	6225DB	Y	A	121	A-146	A-196	A-232
			1.37	II	31900	142000	25	6235DA	Y	B	121	A-146	A-196	A-236
			2.07	III	43600	194000	25	6255DB	Y	C	121	A-150	A-200	A-236
11.3	132000	14900	1.01	I	25400	113000	256	6225	Y	A	87	A-136	A-184	A-214
			1.52	II	35700	159000	256	6245	Y	B	87	A-136	A-188	A-214
			2.08	III	43800	195000	256	6255	Y	C	87	A-136	A-188	A-218
8.79	160000	18100	0.80	-	27200	121000	25	6225DB	Y		165	A-146	A-196	A-232
			1.08	I	33900	151000	25	6235DA	Y	A	165	A-146	A-196	A-236
			1.37	II	38200	170000	25	6245DA	Y	B	165	A-150	A-200	A-236
			1.72	III	46700	208000	25	6255DB	Y	C	165	A-150	A-200	A-236
			2.42	III	57000	254000	25	6265DA	Y	C	165	A-150	A-200	A-236
7.44	189000	21400	0.92	-	35700	159000	25	6235DA	Y		195	A-150	A-196	A-236
			1.23	I	40000	178000	25	6245DA	Y	A	195	A-150	A-200	A-236
			1.46	II	48900	218000	25	6255DA	Y	B	195	A-150	A-200	A-236
			2.05	III	59900	267000	25	6265DA	Y	C	195	A-150	A-200	A-236

Notes: [1] Refer to Technical Information Section for R1 and R2 Model Overhung Load information.
[2] CNHM, CHHM, CNFM, CHFM, CNVM, CVVM are type designations, see page A-3.
[3] Refer to 60 Hz Selection Tables for inverter duty (AV) selections.
[4] For single phase dimensions, type CNHM, see page A-244; type CNVM, see page A-245.
[5] For type CVFM, single reduction, see page A-219; double reduction, see page A-240.

SELECTION TABLES – 50 Hz

25 HP, 18.5 kW, 50 Hz[3], 1450 (980 RPM where noted)

Output Speed	Output Torque		Service Factor		Overhung Load[1]		Selection					Dimension Page[2]		
RPM	in•lb	N•m	SF	AGMA Class	lb	N	HP Symbol	Frame Size	Shaft Spec.	AGMA Class	Ratio	CNHM CHHM[4]	CNVM CVVM[4]	CNFM CHFM[5]
6.28	167000	18900	-	-	38400	171000	25	6235DA	Y		231	A-146	A-196	A-236
	224000	25300	1.02	I	42400	189000	25	6245DA	Y	A	231	A-150	A-200	A-236
			1.23	I	51900	231000	25	6255DA	Y	A	231	A-150	A-200	A-236
			1.82	III	62000	276000	25	6265DA	Y	C	231	A-150	A-200	A-236
5.31	265000	29900	0.86	-	44500	198000	25	6245DA	Y		273	A-150	A-200	A-236
			1.04	I	54600	243000	25	6255DA	Y	A	273	A-150	A-200	A-236
			1.54	II	62000	276000	25	6265DA	Y	B	273	A-150	A-200	A-236
4.55	228000	25800	-	-	46700	208000	25	6245DA	Y		319	A-150	A-200	A-236
	310000	35000	0.93	-	57300	255000	25	6255DA	Y		319	A-150	A-200	A-236
			1.31	II	62000	276000	25	6265DA	Y	B	319	A-150	A-200	A-236
			1.95	III	55700	248000	25	6275DA	Y	C	319	A-150	A-200	[6]
3.85	288000	32500	-	-	57900	258000	25	6255DA	Y		377	A-150	A-200	A-236
	365000	41300	1.11	I	62000	276000	25	6265DA	Y	A	377	A-150	A-200	A-236
			1.65	III	55700	248000	25	6275DA	Y	C	377	A-150	A-200	[6]
3.07	459000	51900	0.89	-	62000	276000	25	6265DA	Y		473	A-150	A-200	A-236
			1.31	II	55700	248000	25	6275DA	Y	B	473	A-150	A-200	[6]
2.59	407000	46000	-	-	62000	276000	25	6265DA	Y		559	A-150	A-200	A-236
	542000	61300	1.11	I	55700	248000	25	6275DA	Y	A	559	A-150	A-200	[6]
2.23	630000	71200	0.96	-	55700	248000	25	6275DA	Y		649	A-150	A-200	[6]
1.98	710000	80200	0.85	-	55700	248000	25	6275DA	Y		731	A-150	A-200	[6]
1.72	603000	68200	-	-	55700	248000	25	6275DA	Y		841	A-150	A-200	[6]

30 HP, 22 kW, 50 Hz[3], 1450 (980 RPM where noted)

Output Speed	Output Torque		Service Factor		Overhung Load[1]		Selection					Dimension Page[2]		
RPM	in•lb	N•m	SF	AGMA Class	lb	N	HP Symbol	Frame Size[7]	Shaft Spec.	AGMA Class	Ratio	CNHM CHHM[4]	CNVM CVVM[4]	CNFM CHFM[5]
242	7310	826	1.10	I	2270	10100	30	6165[H]	Y	A	6	A-128	A-180	A-208
			1.37	II	2580	11500	30	6175	Y	B	6	A-132	A-180	A-210
181	9730	1100	1.10	I	2510	11200	30	6165[H]	Y	A	8	A-128	A-180	A-208
			1.37	II	2830	12600	30	6175	Y	B	8	A-132	A-180	A-210
132	13400	1510	1.10	I	2830	12600	30	6165[H]	Y	A	11	A-128	A-180	A-208
			1.37	II	3260	14500	30	6175	Y	B	11	A-132	A-180	A-210
			1.60	III	4380	19500	30	6180	Y	C	11	A-132	A-180	A-210
			1.77	III	4380	19500	30	6185	Y	C	11	A-132	A-180	A-210
112	15800	1790	1.03	I	2940	13100	30	6165[H]	Y	A	13	A-128	A-180	A-208
			1.37	II	3370	15000	30	6175	Y	B	13	A-132	A-180	A-210
			1.60	III	4540	20200	30	6180	Y	C	13	A-132	A-180	A-210
			1.77	III	4540	20200	30	6185	Y	C	13	A-132	A-180	A-210
96.7	18200	2060	1.02	I	3100	13800	30	6165[H]	Y	A	15	A-128	A-180	A-208
			1.37	II	3500	15600	30	6175	Y	B	15	A-132	A-180	A-210
			1.77	III	4780	21300	30	6185	Y	C	15	A-132	A-180	A-210
85.3	20700	2340	0.86	-	3170	14100	30	6165[H]	Y		17	A-128	A-180	A-208
			1.10	I	3640	16200	30	6175	Y	A	17	A-132	A-180	A-210
			1.39	II	5030	22400	30	6180	Y	B	17	A-132	A-180	A-210
			1.74	III	5030	22400	30	6185	Y	C	17	A-132	A-180	A-210
			1.86	III	7050	31400	30	6190	Y	C	17	A-132	A-180	A-210

Notes: [1] Refer to Technical Information Section for R1 and R2 Model Overhung Load information.
[2] CNHM, CHHM, CNFM, CHFM, CNVM, CVVM are type designations, see page A-3.
[3] Refer to 60 Hz Selection Tables for inverter duty (AV) selections.
[4] For single phase dimensions, type CNHM, see page A-244; type CNVM, see page A-245.
[5] For type CVFM, single reduction, see page A-219; double reduction, see page A-240.
[6] Consult factory for frame size 6275DA.
[7] [H] indicates a high center height unit.

30 HP, 22 kW, 50 Hz[3], 1450 (980 RPM where noted)

Output Speed	Output Torque		Service Factor		Overhung Load[1]		Selection					Dimension Page[2]		
RPM	in•lb	N•m	SF	AGMA Class	lb	N	HP Symbol	Frame Size	Shaft Spec.	AGMA Class	Ratio	CNHM CHHM[4]	CNVM CVVM[4]	CNFM CHFM[5]
69.0	25600	2890	1.07	I	3930	17500	30	6175	Y	A	21	A-132	A-180	A-210
			1.36	II	5390	24000	30	6180	Y	B	21	A-132	A-180	A-210
			1.73	III	5390	24000	30	6185	Y	C	21	A-132	A-180	A-210
			1.86	III	7570	33700	30	6190	Y	C	21	A-132	A-180	A-210
58.0	30400	3440	0.89	-	4020	17900	30	6175	Y		25	A-132	A-180	A-210
			1.10	I	5590	24900	30	6180	Y	A	25	A-132	A-180	A-210
			1.37	II	5590	24900	30	6185	Y	B	25	A-132	A-180	A-210
			1.60	III	7930	35300	30	6190	Y	C	25	A-132	A-180	A-210
			1.84	III	7930	35300	30	6195	Y	C	25	A-132	A-180	A-210
50.0	35300	3990	1.10	I	5820	25900	30	6185	Y	A	29	A-132	A-180	A-210
			1.40	II	8310	37000	30	6190	Y	B	29	A-132	A-180	A-210
			1.72	III	8310	37000	30	6195	Y	C	29	A-132	A-180	A-210
			2.08	III	15400	68500	30	6205	Y	C	29	A-132	A-184	A-214
41.4	42600	4820	1.03	I	6170	27500	30	6185	Y	A	35	A-132	A-180	A-210
			1.37	II	8760	39000	30	6195	Y	B	35	A-132	A-180	A-210
33.7	52400	5920	0.85	-	6530	29100	30	6185	Y		43	A-132	A-180	A-210
			1.23	I	9390	41800	30	6195	Y	A	43	A-132	A-180	A-210
			1.45	II	17300	77100	30	6205	Y	B	43	A-132	A-184	A-214
			2.05	III	17700	78700	30	6215	Y	C	43	A-136	A-184	A-214
28.4	62100	7020	0.95	-	9740	43400	30	6195	Y		51	A-132	A-180	A-210
24.6	71800	8120	0.86	-	10200	45300	30	6195	Y		59	A-132	A-180	A-210
			1.03	I	18800	83600	30	6205	Y	A	59	A-132	A-184	A-214
			1.54	II	19200	85300	30	6215	Y	B	59	A-136	A-184	A-214
			1.79	III	20300	90500	30	6225	Y	C	59	A-136	A-184	A-214
22.8	77500	8760	1.06	I	18900	84100	306	6205	Y	A	43	A-132	A-184	A-214
			1.45	II	19800	88000	306	6215	Y	B	43	A-136	A-184	A-214
			1.83	III	21000	93400	306	6225	Y	C	43	A-136	A-184	A-214
16.7	106000	12000	1.21	I	22700	101000	30	6225	Y	A	87	A-136	A-184	A-214
16.6	106000	12000	1.05	I	21400	95200	306	6215	Y	A	59	A-136	A-184	A-214
			1.32	II	22700	101000	306	6225	Y	B	59	A-136	A-184	A-214
			2.15	III	31700	141000	306	6245	Y	C	59	A-136	A-188	A-214
12.0	101000	11400	-	-	23400	104000	30	6215DB	Y		121	A-146	A-196	A-232
	140000	15800	0.85	-	25400	113000	30	6225DB	Y		121	A-146	A-196	A-232
			1.15	I	31700	141000	30	6235DA	Y	A	121	A-146	A-196	A-236
			1.30	II	35300	157000	30	6245DB	Y	B	121	A-150	A-200	A-236
			1.74	III	43300	193000	30	6255DB	Y	C	121	A-150	A-200	A-236
			1.99	III	53200	237000	30	6265DA	Y	C	121	A-150	A-200	A-236
11.3	157000	17700	1.28	I	35500	158000	306	6245	Y	A	87	A-136	A-188	A-214
			1.75	III	43800	195000	306	6255	Y	C	87	A-136	A-188	A-218
8.79	190000	21500	0.91	-	33900	151000	30	6235DA	Y		165	A-146	A-196	A-236
			1.15	I	37900	169000	30	6245DA	Y	A	165	A-150	A-200	A-236
			1.45	II	46500	207000	30	6255DB	Y	B	165	A-150	A-200	A-236
			2.03	III	56800	253000	30	6265DA	Y	C	165	A-150	A-200	A-236
7.44	173000	19600	-	-	35700	159000	30	6235DA	Y		195	A-146	A-196	A-236
	225000	25400	1.03	I	39700	177000	30	6245DA	Y	A	195	A-150	A-200	A-236
			1.72	III	59700	266000	30	6265DA	Y	C	195	A-150	A-200	A-236

Notes: [1] Refer to Technical Information Section for R1 and R2 Model Overhung Load information.
[2] CNHM, CHHM, CNFM, CHFM, CNVM, CVVM are type designations, see page A-3.
[3] Refer to 60 Hz Selection Tables for inverter duty (AV) selections.
[4] For single phase dimensions, type CNHM, see page A-244; type CNVM, see page A-245.
[5] For type CVFM, single reduction, see page A-219; double reduction, see page A-240.

SELECTION TABLES – 50 Hz

20 HP, 15 kW, 50 Hz[3], 1450 (980 RPM where noted)

Output Speed	Output Torque		Service Factor		Overhung Load[1]		Selection					Dimension Page[2]		
RPM	in•lb	N•m	SF	AGMA Class	lb	N	HP Symbol	Frame Size	Shaft Spec.	AGMA Class	Ratio	CNHM CHHM[4]	CNVM CVVM[4]	CNFM CHFM[5]
3.85	228000	25800	-	-	46700	208000	20	6245DA	Y		377	A-150	A-200	A-236
	296000	33500	0.97	-	57900	258000	20	6255DA	Y		377	A-150	A-200	A-236
			1.37	II	62000	276000	20	6265DA	Y	B	377	A-150	A-200	A-236
			2.03	III	55700	248000	20	6275DA	Y	C	377	A-150	A-200	[6]
3.07	228000	25800	-	-	46700	208000	20	6245DA	Y		473	A-150	A-200	A-236
	373000	42100	0.82	-	57900	258000	20	6255DA	Y		473	A-150	A-200	A-236
			1.09	I	62000	276000	20	6265DA	Y	A	473	A-150	A-200	A-236
			1.62	III	55700	248000	20	6275DA	Y	C	473	A-150	A-200	[6]
2.59	305000	34500	-	-	57900	258000	20	6255DA	Y		559	A-150	A-200	A-236
	440000	49700	0.93	-	62000	276000	20	6265DA	Y		559	A-150	A-200	A-236
			1.37	II	55700	248000	20	6275DA	Y	B	559	A-150	A-200	[6]
2.23	511000	57700	0.80	-	62000	276000	20	6265DA	Y		649	A-150	A-200	A-236
			1.18	I	55700	248000	20	6275DA	Y	A	649	A-150	A-200	[6]
1.98	407000	46000	-	-	62000	276000	20	6265DA	Y		731	A-150	A-200	A-236
	575000	65000	1.05	I	55700	248000	20	6275DA	Y	A	731	A-150	A-200	[6]
1.72	407000	46000	-	-	62000	276000	20	6265DA	Y		841	A-150	A-200	A-236
	662000	74800	0.91	-	55700	248000	20	6275DA	Y		841	A-150	A-200	[6]
1.45	603000	68200	-	-	55700	248000	20	6275DA	Y		1003	A-150	A-200	[6]
1.16	603000	68200	-	-	55700	248000	20	6275DA	Y		1247	A-150	A-200	[6]

25 HP, 18.5 kW, 50 Hz[3], 1450 (980 RPM where noted)

Output Speed	Output Torque		Service Factor		Overhung Load[1]		Selection					Dimension Page[2]		
RPM	in•lb	N•m	SF	AGMA Class	lb	N	HP Symbol	Frame Size[7]	Shaft Spec.	AGMA Class	Ratio	CNHM CHHM[4]	CNVM CVVM[4]	CNFM CHFM[5]
242	6150	695	1.10	I	2290	10200	25	6160	Y	A	6	A-128	A-180	A-208
			1.30	II	2290	10200	25	6165[H]	Y	B	6	A-128	A-180	A-208
			1.63	III	2580	11500	25	6175	Y	C	6	A-132	A-180	A-210
181	8190	926	1.06	I	2540	11300	25	6160	Y	A	8	A-128	A-180	A-208
			1.30	II	2540	11300	25	6165[H]	Y	B	8	A-128	A-180	A-208
			1.63	III	2850	12700	25	6175	Y	C	8	A-132	A-180	A-210
132	11200	1270	1.06	I	2850	12700	25	6160	Y	A	11	A-128	A-180	A-208
			1.30	II	2850	12700	25	6165[H]	Y	B	11	A-128	A-180	A-208
			1.63	III	3280	14600	25	6175	Y	C	11	A-132	A-180	A-210
			1.90	III	4380	19500	25	6180	Y	C	11	A-132	A-180	A-210
112	13300	1500	1.22	I	2990	13300	25	6165[H]	Y	A	13	A-128	A-180	A-208
			1.48	II	3410	15200	25	6170	Y	B	13	A-132	A-180	A-210
			1.63	III	3410	15200	25	6175	Y	C	13	A-132	A-180	A-210
			1.90	III	4560	20300	25	6180	Y	C	13	A-132	A-180	A-210
96.7	15400	1740	1.21	I	3140	14000	25	6165[H]	Y	A	15	A-128	A-180	A-208
			1.38	II	3550	15800	25	6170	Y	B	15	A-132	A-180	A-210
			1.63	III	3550	15800	25	6175	Y	C	15	A-132	A-180	A-210
			1.75	III	4800	21400	25	6180	Y	C	15	A-132	A-180	A-210
85.3	17400	1970	1.02	I	3230	14400	25	6165[H]	Y	A	17	A-128	A-180	A-208
			1.30	II	3700	16500	25	6175	Y	B	17	A-132	A-180	A-210
			1.65	III	5070	22600	25	6180	Y	C	17	A-132	A-180	A-210
			2.06	III	5070	22600	25	6185	Y	C	17	A-132	A-180	A-210

Notes: [1] Refer to Technical Information Section for R1 and R2 Model Overhung Load information.
[2] CNHM, CHHM, CNFM, CHFM, CNVM, CVVM are type designations, see page A-3.
[3] Refer to 60 Hz Selection Tables for inverter duty (AV) selections.
[4] For single phase dimensions, type CNHM, see page A-244; type CNVM, see page A-245.
[5] For type CVFM, single reduction, see page A-219; double reduction, see page A-240.
[6] Consult factory for frame size 6275DA.
[7] [H] indicates a high center height unit.

SELECTION TABLES – 50 Hz

30 HP, 22 kW, 50 Hz[3], 1450 (980 RPM where noted)

Output Speed	Output Torque		Service Factor		Overhung Load[1]		Selection					Dimension Page[2]		
RPM	in•lb	N•m	SF	AGMA Class	lb	N	HP Symbol	Frame Size	Shaft Spec.	AGMA Class	Ratio	CNHM CHHM[4]	CNVM CVVM[4]	CNFM CHFM[5]
6.28	266000	30100	0.86	-	42200	188000	30	6245DA	Y		231	A-150	A-200	A-236
			1.03	I	51900	231000	30	6255DA	Y	A	231	A-150	A-200	A-236
			1.53	II	62000	276000	30	6265DA	Y	B	231	A-150	A-200	A-236
5.31	228000	25800	-	-	44700	199000	30	6245DA	Y		273	A-150	A-200	A-236
	315000	35600	0.87	-	54300	242000	30	6255DA	Y		273	A-150	A-200	A-236
			1.29	I	62000	276000	30	6265DA	Y	A	273	A-150	A-200	A-236
4.55	288000	32500	-	-	57300	255000	30	6255DA	Y		319	A-150	A-200	A-236
	368000	41600	1.11	I	62000	276000	30	6265DA	Y	A	319	A-150	A-200	A-236
			1.64	III	55700	248000	30	6275DA	Y	C	319	A-150	A-200	[6]
3.85	435000	49200	0.94	-	62000	276000	30	6265DA	Y		377	A-150	A-200	A-236
			1.39	II	55700	248000	30	6275DA	Y	B	377	A-150	A-200	[6]
3.07	407000	46000	-	-	62000	276000	30	6265DA	Y		473	A-150	A-200	A-236
	546000	61700	1.11	I	55700	248000	30	6275DA	Y	A	473	A-150	A-200	[6]
2.59	645000	72900	0.94	-	55700	248000	30	6275DA	Y		559	A-150	A-200	[6]
2.23	749000	84600	0.81	-	55700	248000	30	6275DA	Y		649	A-150	A-200	[6]
1.98	603000	68200	-	-	55700	248000	30	6275DA	Y		731	A-150	A-200	[6]

40 HP, 30 kW, 50 Hz[3], 1450 (980 RPM where noted)

Output Speed	Output Torque		Service Factor		Overhung Load[1]		Selection					Dimension Page[2]		
RPM	in•lb	N•m	SF	AGMA Class	lb	N	HP Symbol	Frame Size	Shaft Spec.	AGMA Class	Ratio	CNHM CHHM[4]	CNVM CVVM[4]	CNFM CHFM[5]
242	10000	1130	1.00	I	2540	11300	40	6175	Y	A	6	A-132	A-180	A-210
181	13300	1500	1.00	I	2780	12400	40	6175	Y	A	8	A-132	A-180	A-210
132	18200	2060	1.00	I	3170	14100	40	6175	Y	A	11	A-132	A-180	A-210
			1.30	II	4310	19200	40	6185	Y	B	11	A-132	A-180	A-210
			1.60	III	6080	27100	40	6195	Y	C	11	A-132	A-180	A-210
			1.99	III	11700	52200	40	6205	Y	C	11	A-132	A-184	A-214
112	21600	2440	1.00	I	3280	14600	40	6175	Y	A	13	A-132	A-180	A-210
			1.30	II	4470	19900	40	6185	Y	B	13	A-132	A-180	A-210
			1.60	III	6330	28200	40	6195	Y	C	13	A-132	A-180	A-210
96.7	25000	2820	1.00	I	3390	15100	40	6175	Y	A	15	A-132	A-180	A-210
			1.30	II	4690	20900	40	6185	Y	B	15	A-132	A-180	A-210
			1.60	III	6620	29500	40	6195	Y	C	15	A-132	A-180	A-210
			1.99	III	12600	56000	40	6205	Y	C	15	A-132	A-184	A-214
85.3	28200	3190	0.80	-	3530	15700	40	6175	Y		17	A-132	A-180	A-210
			1.27	I	4940	22000	40	6185	Y	A	17	A-132	A-180	A-210
			1.60	III	6980	31100	40	6195	Y	C	17	A-132	A-180	A-210
69.0	34900	3940	1.27	I	5300	23600	40	6185	Y	A	21	A-132	A-180	A-210
			1.37	II	7520	33500	40	6190	Y	B	21	A-132	A-180	A-210
			1.60	III	7520	33500	40	6195	Y	C	21	A-132	A-180	A-210
			1.97	III	14100	62700	40	6205	Y	C	21	A-132	A-184	A-214
58.0	41500	4690	1.00	I	5480	24400	40	6185	Y	A	25	A-132	A-180	A-210
			1.35	II	7840	34900	40	6195	Y	B	25	A-132	A-180	A-210
50.0	48100	5440	0.80	-	5680	25300	40	6185	Y		29	A-132	A-180	A-210
			1.26	I	8220	36600	40	6195	Y	A	29	A-132	A-180	A-210
			1.52	II	15300	68200	40	6205	Y	B	29	A-132	A-184	A-214
			1.95	III	15600	69600	40	6215	Y	C	29	A-136	A-184	A-214

Notes: [1] Refer to Technical Information Section for R1 and R2 Model Overhung Load information.
[2] CNHM, CHHM, CNFM, CHFM, CNVM, CVVM are type designations, see page A-3.
[3] Refer to 60 Hz Selection Tables for inverter duty (AV) selections.
[4] For single phase dimensions, type CNHM, see page A-244; type CNVM, see page A-245.
[5] For type CVFM, single reduction, see page A-219; double reduction, see page A-240.
[6] Consult factory for frame size 6275DA.

40 HP, 30 kW, 50 Hz[3], 1450 (980 RPM where noted)

Output Speed	Output Torque		Service Factor		Overhung Load[1]		Selection					Dimension Page[2]		
RPM	in•lb	N•m	SF	AGMA Class	lb	N	HP Symbol	Frame Size	Shaft Spec.	AGMA Class	Ratio	CNHM CHHM[4]	CNVM CVVM[4]	CNFM CHFM[5]
46.7	51600	5830	1.09	I	8460	37700	406	6190	Y	A	21	A-132	A-180	A-210
			1.36	II	8460	37700	406	6195	Y	B	21	A-132	A-180	A-210
			2.14	III	16100	71700	406	6215	Y	C	21	A-136	A-184	A-214
41.4	58100	6570	1.00	I	8620	38400	40	6195	Y	A	35	A-132	A-180	A-210
33.8	71200	8050	1.15	I	17100	76300	406	6205	Y	A	29	A-132	A-184	A-214
			1.57	II	17500	77800	406	6215	Y	B	29	A-136	A-184	A-214
			1.87	III	18500	82500	406	6225	Y	C	29	A-136	A-184	A-214
33.7	71400	8070	0.90	-	9230	41100	40	6195	Y		43	A-132	A-180	A-210
			1.06	I	17200	76600	40	6205	Y	A	43	A-132	A-184	A-214
			1.51	II	17600	78200	40	6215	Y	B	43	A-136	A-184	A-214
			1.88	III	18600	83000	40	6225	Y	C	43	A-136	A-184	A-214
24.6	98200	11100	1.13	I	19000	84600	40	6215	Y	A	59	A-136	A-184	A-214
			1.31	II	20200	89800	40	6225	Y	B	59	A-136	A-184	A-214
22.8	105000	11900	1.06	I	19600	87200	406	6215	Y	A	43	A-136	A-184	A-214
			1.34	II	20800	92600	406	6225	Y	B	43	A-136	A-184	A-214
			2.16	III	29000	129000	406	6245	Y	C	43	A-136	A-188	A-214
16.6	145000	16400	1.15	I	28100	125000	406	6235	Y	A	59	A-136	A-184	A-214
			1.57	II	31400	140000	406	6245	Y	B	59	A-136	A-188	A-214
			1.89	III	38800	173000	406	6255	Y	C	59	A-136	A-188	A-218
12.0	119000	13500	-	-	25400	113000	40	6225DB	Y		121	A-146	A-196	A-232
	190000	21500	0.87	-	31400	140000	40	6235DB	Y		121	A-146	A-196	A-236
			1.06	I	43100	192000	40	6255DA	Y	A	121	A-150	A-200	A-236
			1.46	II	53000	236000	40	6265DA	Y	B	121	A-150	A-200	A-236
11.3	214000	24200	1.28	I	43300	193000	406	6255	Y	A	87	A-136	A-188	A-218
			1.78	III	53000	236000	406	6265	Y	C	87	A-136	A-188	A-218
8.79	173000	19600	-	-	33900	151000	40	6235DB	Y		165	A-146	A-196	A-236
	259000	29300	0.89	-	37500	167000	40	6245DB	Y		165	A-150	A-200	A-236
			1.06	I	46300	206000	40	6255DB	Y	A	165	A-150	A-200	A-236
			1.49	II	56600	252000	40	6265DA	Y	B	165	A-150	A-200	A-236
7.44	232000	26200	-	-	39700	177000	40	6245DB	Y		195	A-150	A-200	A-236
	307000	34700	0.90	-	48500	216000	40	6255DA	Y		195	A-150	A-200	A-236
			1.26	I	59500	265000	40	6265DA	Y	A	195	A-150	A-200	A-236
6.28	228000	25800	-	-	42400	189000	40	6245DB	Y		231	A-150	A-200	A-236
	274000	31000	-	-	51900	231000	40	6255DA	Y		231	A-150	A-200	A-236
	364000	41100	1.12	I	62000	276000	40	6265DA	Y	A	231	A-150	A-200	A-236
5.31	274000	31000	-	-	54600	243000	40	6255DA	Y		273	A-150	A-200	A-236
	429000	48500	0.95	-	62000	276000	40	6265DA	Y		273	A-150	A-200	A-236
4.55	502000	56700	0.81	-	62000	276000	40	6265DA	Y		319	A-150	A-200	A-236
	502000	56700	1.20	I	55700	248000	40	6275DA	Y	A	319	A-150	A-200	[6]
3.85	407000	46000	-	-	62000	276000	40	6265DA	Y		377	A-150	A-200	A-236
	593000	67000	1.02	I	55700	248000	40	6275DA	Y	A	377	A-150	A-200	[6]
3.07	744000	84100	0.81	-	55700	248000	40	6275DA	Y		473	A-150	A-200	[6]
2.59	603000	68200	-	-	55700	248000	40	6275DA	Y		559	A-150	A-200	[6]

Notes: [1] Refer to Technical Information Section for R1 and R2 Model Overhung Load information.
[2] CNHM, CHHM, CNFM, CHFM, CNVM, CVVM are type designations, see page A-3.
[3] Refer to 60 Hz Selection Tables for inverter duty (AV) selections.
[4] For single phase dimensions, type CNHM, see page A-244; type CNVM, see page A-245.
[5] For type CVFM, single reduction, see page A-219; double reduction, see page A-240.
[6] Consult factory for frame size 6275DA.

SELECTION TABLES – 50 Hz

50 HP, 37 kW, 50 Hz[3], 1450 (980 RPM where noted)

Output Speed	Output Torque		Service Factor		Overhung Load[1]		Selection					Dimension Page[2]		
RPM	in•lb	N•m	SF	AGMA Class	lb	N	HP Symbol	Frame Size	Shaft Spec.	AGMA Class	Ratio	CNHM CHHM[4]	CNVM CVVM[4]	CNFM CHFM[5]
132	22600	2550	1.05	I	4270	19000	50	6185	Y	A	11	A-132	A-180	A-210
			1.30	II	6060	27000	50	6195	Y	B	11	A-132	A-180	A-210
			1.61	III	11700	52000	50	6205	Y	C	11	A-132	A-184	A-214
			2.04	III	11800	52700	50	6215	Y	C	11	A-136	A-184	A-214
112	26600	3010	1.05	I	4420	19700	50	6185	Y	A	13	A-132	A-180	A-210
			1.30	II	6290	28000	50	6195	Y	B	13	A-132	A-180	A-210
96.7	30700	3470	1.05	I	4630	20600	50	6185	Y	A	15	A-132	A-180	A-210
			1.30	II	6580	29300	50	6195	Y	B	15	A-132	A-180	A-210
			1.61	III	12600	55900	50	6205	Y	C	15	A-132	A-184	A-214
			2.04	III	12700	56600	50	6215	Y	C	15	A-136	A-184	A-214
85.3	34900	3940	1.03	I	4850	21600	50	6185	Y	A	17	A-132	A-180	A-210
			1.30	II	6940	30900	50	6195	Y	B	17	A-132	A-180	A-210
69.0	43000	4860	1.03	I	5230	23300	50	6185	Y	A	21	A-132	A-180	A-210
			1.30	II	7450	33200	50	6195	Y	B	21	A-132	A-180	A-210
			1.60	III	14000	62500	50	6205	Y	C	21	A-132	A-184	A-214
			2.04	III	14300	63800	50	6215	Y	C	21	A-136	A-184	A-214
65.3	45500	5140	1.11	I	7390	32900	506	6190	Y	A	15	A-132	A-180	A-210
			1.30	II	7390	32900	506	6195	Y	B	15	A-132	A-180	A-210
			1.61	III	14100	62600	506	6205	Y	C	15	A-132	A-184	A-214
			2.04	III	14200	63400	506	6215	Y	C	15	A-136	A-184	A-214
58.0	51200	5790	0.81	-	5370	23900	50	6185	Y		25	A-132	A-180	A-210
			1.09	I	7770	34600	50	6195	Y	A	25	A-132	A-180	A-210
50.0	59400	6710	1.02	I	8130	36200	50	6195	Y	A	29	A-132	A-180	A-210
			1.58	II	15600	69300	50	6215	Y	B	29	A-136	A-184	A-214
			2.04	III	16500	73400	50	6225	Y	C	29	A-136	A-184	A-214
46.7	63600	7190	1.11	I	8370	37300	506	6195	Y	A	21	A-132	A-180	A-210
			1.74	III	16000	71400	506	6215	Y	C	21	A-136	A-184	A-214
			2.06	III	17000	75500	506	6225	Y	C	21	A-136	A-184	A-214
41.4	71700	8100	0.81	-	8530	38000	50	6195	Y		35	A-132	A-180	A-210
33.8	87900	9930	1.27	I	17400	77300	506	6215	Y	A	29	A-136	A-184	A-214
			1.51	II	18400	82000	506	6225	Y	B	29	A-136	A-184	A-214
			1.90	III	23100	103000	506	6235	Y	C	29	A-136	A-184	A-214
33.7	88000	9950	1.22	I	17400	77700	50	6215	Y	A	43	A-136	A-184	A-214
			1.53	II	18500	82500	50	6225	Y	B	43	A-136	A-184	A-214
24.6	121000	13700	1.06	I	20000	89200	50	6225	Y	A	59	A-136	A-184	A-214
22.8	130000	14700	1.09	I	20700	92000	506	6225	Y	A	43	A-136	A-184	A-214
			1.75	III	29000	129000	506	6245	Y	C	43	A-136	A-188	A-214
16.6	179000	20200	1.28	I	31400	140000	506	6245	Y	A	59	A-136	A-188	A-214
			1.54	II	38600	172000	506	6255	Y	B	59	A-136	A-188	A-218
			2.28	III	47400	211000	506	6265	Y	C	59	A-136	A-188	A-218
12.0	165000	18700	-	-	31700	141000	50	6235DB	Y		121	A-146	A-196	A-236
	181000	20500	-	-	35000	156000	50	6245DB	Y		121	A-150	A-200	A-236
	234000	26500	1.04	I	42900	191000	50	6255DB	Y	A	121	A-150	A-200	A-236
11.3	264000	29800	1.04	I	43100	192000	506	6255	Y	A	87	A-136	A-188	A-218
			1.44	II	53000	236000	506	6265	Y	B	87	A-136	A-188	A-218

Notes: [1] Refer to Technical Information Section for R1 and R2 Model Overhung Load information.
[2] CNHM, CHHM, CNFM, CHFM, CNVM, CVVM are type designations, see page A-3.
[3] Refer to 60 Hz Selection Tables for inverter duty (AV) selections.
[4] For single phase dimensions, type CNHM, see page A-244; type CNVM, see page A-245.
[5] For type CVFM, single reduction, see page A-219; double reduction, see page A-240.

50 HP, 37 kW, 50 Hz[3], 1450 (980 RPM where noted)

Output Speed	Output Torque		Service Factor		Overhung Load[1]		Selection					Dimension Page[2]		
RPM	in•lb	N•m	SF	AGMA Class	lb	N	HP Symbol	Frame Size	Shaft Spec.	AGMA Class	Ratio	CNHM CHHM[4]	CNVM CVVM[4]	CNFM CHFM[5]
8.79	232000	26200	-	-	37700	168000	50	6245DB	Y		165	A-150	A-200	A-236
	320000	36200	0.86	-	46000	205000	50	6255DB	Y		165	A-150	A-200	A-236
			1.21	I	56400	251000	50	6265DA	Y	A	165	A-150	A-200	A-236
7.44	276000	31200	-	-	48500	216000	50	6255DB	Y		195	A-150	A-200	A-236
	379000	42800	1.02	I	59100	263000	50	6265DA	Y	A	195	A-150	A-200	A-236
6.28	449000	50700	0.91	-	62000	276000	50	6265DA	Y		231	A-150	A-200	A-236
5.31	407000	46000	-	-	62000	276000	50	6265DA	Y		273	A-150	A-200	A-236
4.55	619000	70000	0.97	-	55700	248000	50	6275DA	Y		319	A-150	A-200	[6]
3.85	732000	82700	0.82	-	55700	248000	50	6275DA	Y		377	A-150	A-200	[6]

60 HP, 45 kW, 50 Hz[3], 1450 (980 RPM where noted)

Output Speed	Output Torque		Service Factor		Overhung Load[1]		Selection					Dimension Page[2]		
RPM	in•lb	N•m	SF	AGMA Class	lb	N	HP Symbol	Frame Size	Shaft Spec.	AGMA Class	Ratio	CNHM CHHM[4]	CNVM CVVM[4]	CNFM CHFM[5]
132	27400	3100	1.07	I	6020	26800	60	6195	Y	A	11	A-132	A-180	A-210
			1.33	II	11700	51900	60	6205	Y	B	11	A-132	A-184	A-214
			1.67	III	11800	52600	60	6215	Y	C	11	A-136	A-184	A-214
			2.21	III	12500	55800	60	6225	Y	C	11	A-136	A-184	A-214
112	32400	3660	1.07	I	6220	27700	60	6195	Y	A	13	A-132	A-180	A-210
96.7	37300	4220	1.07	I	6510	29000	60	6195	Y	A	15	A-132	A-180	A-210
			1.33	II	12500	55700	60	6205	Y	B	15	A-132	A-184	A-214
			1.67	III	12700	56500	60	6215	Y	C	15	A-136	A-184	A-214
			2.21	III	13500	60200	60	6225	Y	C	15	A-136	A-184	A-214
85.3	42400	4790	0.85	-	4760	21200	60	6185	Y		17	A-132	A-180	A-210
			1.07	I	6870	30600	60	6195	Y	A	17	A-132	A-180	A-210
69.0	52300	5910	0.85	-	5120	22800	60	6185	Y		21	A-132	A-180	A-210
			1.07	I	7390	32900	60	6195	Y	A	21	A-132	A-180	A-210
			1.32	II	14000	62200	60	6205	Y	B	21	A-132	A-184	A-214
			1.67	III	14300	63600	60	6215	Y	C	21	A-136	A-184	A-214
			2.09	III	15100	67200	60	6225	Y	C	21	A-136	A-184	A-214
65.3	55300	6250	1.33	II	14000	62300	606	6205	Y	B	15	A-132	A-184	A-214
			1.67	III	14200	63100	606	6215	Y	C	15	A-136	A-184	A-214
			2.21	III	15100	67400	606	6225	Y	C	15	A-136	A-184	A-214
58.0	62300	7040	0.90	-	7680	34200	60	6195	Y		25	A-132	A-180	A-210
50.0	72300	8170	0.84	-	8020	35700	60	6195	Y		29	A-132	A-180	A-210
			1.02	I	15200	67600	60	6205	Y	A	29	A-132	A-184	A-214
			1.30	II	15500	68900	60	6215	Y	B	29	A-136	A-184	A-214
			1.67	III	16400	73100	60	6225	Y	C	29	A-136	A-184	A-214
46.7	77400	8750	1.06	I	15600	69500	606	6205	Y	A	21	A-132	A-184	A-214
			1.43	II	15900	71000	606	6215	Y	B	21	A-136	A-184	A-214
			1.69	III	16900	75100	606	6225	Y	C	21	A-136	A-184	A-214
			2.16	III	21100	94100	606	6235	Y	C	21	A-136	A-184	A-214
33.8	107000	12100	1.05	I	17200	76800	606	6215	Y	A	29	A-136	A-184	A-214
			1.56	II	22900	102000	606	6235	Y	B	29	A-136	A-184	A-214
			2.09	III	25600	114000	606	6245	Y	C	29	A-136	A-188	A-214

Notes: [1] Refer to Technical Information Section for R1 and R2 Model Overhung Load information.
[2] CNHM, CHHM, CNFM, CHFM, CNVM, CVVM are type designations, see page A-3.
[3] Refer to 60 Hz Selection Tables for inverter duty (AV) selections.
[4] For single phase dimensions, type CNHM, see page A-244; type CNVM, see page A-245.
[5] For type CVFM, single reduction, see page A-219; double reduction, see page A-240.
[6] Consult factory for frame size 6275DA.

SELECTION TABLES – 50 Hz

60 HP, 45 kW, 50 Hz[3], 1450 (980 RPM where noted)

Output Speed	Output Torque		Service Factor		Overhung Load[1]		Selection					Dimension Page[2]		
RPM	in•lb	N•m	SF	AGMA Class	lb	N	HP Symbol	Frame Size	Shaft Spec.	AGMA Class	Ratio	CNHM CHHM[4]	CNVM CVVM[4]	CNFM CHFM[5]
33.7	107000	12100	1.00	I	17300	77200	60	6215	Y	A	43	A-136	A-184	A-214
22.8	158000	17900	1.06	I	25600	114000	606	6235	Y	A	43	A-136	A-184	A-214
			1.44	II	28700	128000	606	6245	Y	B	43	A-136	A-188	A-214
			1.73	III	35300	157000	606	6255	Y	C	43	A-136	A-188	A-218
			2.51	III	43300	193000	606	6265	Y	C	43	A-136	A-188	A-218
16.6	218000	24600	1.05	I	31200	139000	606	6245	Y	A	59	A-136	A-188	A-218
			1.87	III	47200	210000	606	6265	Y	C	59	A-136	A-188	A-218
12.0	286000	32300	0.85	-	42700	190000	60	6255DB	Y		121	A-150	A-200	A-236
11.3	320000	36200	1.19	I	52800	235000	606	6265	Y	A	87	A-136	A-188	A-218
8.79	389000	44000	0.98	-	56100	250000	60	6265DA	Y		165	A-150	A-200	A-236
7.44	460000	52000	0.84	-	58800	262000	60	6265DA	Y		195	A-150	A-200	A-236
6.28	407000	46000	-	-	62000	276000	60	6265DA	Y		231	A-150	A-200	A-236
4.55	753000	85100	0.80	-	55700	248000	60	6275DA	Y		319	A-150	A-200	[6]

75 HP, 55 kW, 50 Hz[3], 1450 (980 RPM where noted)

Output Speed	Output Torque		Service Factor		Overhung Load[1]		Selection					Dimension Page[2]		
RPM	in•lb	N•m	SF	AGMA Class	lb	N	HP Symbol	Frame Size	Shaft Spec.	AGMA Class	Ratio	CNHM CHHM[4]	CNVM CVVM[4]	CNFM CHFM[5]
132	33500	3790	1.09	I	11600	51700	75	6205	Y	A	11	A-132	A-184	A-214
			1.37	II	11800	52400	75	6215	Y	B	11	A-136	A-184	A-214
			1.81	III	12500	55600	75	6225	Y	C	11	A-136	A-184	A-214
96.7	45700	5160	1.09	I	12500	55500	75	6205	Y	A	15	A-132	A-184	A-214
			1.37	II	12600	56200	75	6215	Y	B	15	A-136	A-184	A-214
			1.81	III	13500	60000	75	6225	Y	C	15	A-136	A-184	A-214
69.0	64000	7230	1.08	I	13900	61900	75	6205	Y	A	21	A-132	A-184	A-214
			1.37	II	14200	63300	75	6215	Y	B	21	A-136	A-184	A-214
			1.71	III	15000	66900	75	6225	Y	C	21	A-136	A-184	A-214
50.0	88300	9980	1.06	I	15400	68500	75	6215	Y	A	29	A-136	A-184	A-214
			1.37	II	16300	72700	75	6225	Y	B	29	A-136	A-184	A-214
33.8	131000	14800	1.71	III	25600	114000	756	6245	Y	C	29	A-136	A-188	A-214
			2.15	III	31700	141000	756	6255	Y	C	29	A-136	A-188	A-218
33.7	131000	14800	1.03	I	18300	81400	75	6225	Y	A	43	A-136	A-184	A-214
22.8	194000	21900	1.18	I	28500	127000	756	6245	Y	A	43	A-136	A-188	A-214
			1.42	II	35300	157000	756	6255	Y	B	43	A-136	A-188	A-218
			2.05	III	43100	192000	756	6265	Y	C	43	A-136	A-188	A-218
16.6	265000	30000	1.03	I	38200	170000	756	6255	Y	A	59	A-136	A-188	A-218
			1.53	II	46900	209000	756	6265	Y	B	59	A-136	A-188	A-218

Notes: [1] Refer to Technical Information Section for R1 and R2 Model Overhung Load information.
[2] CNHM, CHHM, CNFM, CHFM, CNVM, CVVM are type designations, see page A-3.
[3] Refer to 60 Hz Selection Tables for inverter duty (AV) selections.
[4] For single phase dimensions, type CNHM, see page A-244; type CNVM, see page A-245.
[5] For type CVFM, single reduction, see page A-219; double reduction, see page A-240.
[6] Consult factory for frame size 6275DA.

NOTES

INTEGRAL FOOT MOUNT
SINGLE REDUCTION

CNHM – 606□~610H[1]

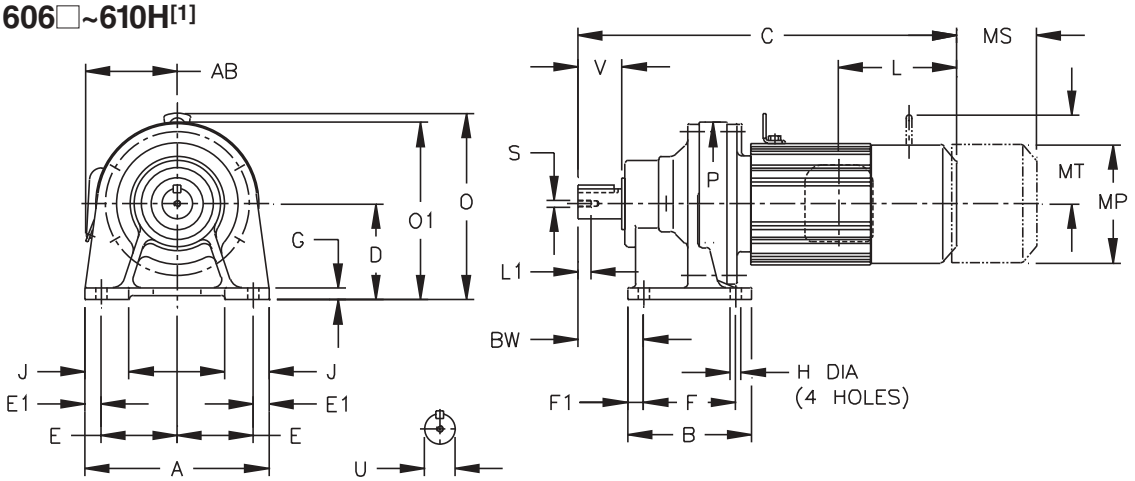

Inch (in)

Model CNHM	A	B	D	E	E1	F	F1	G	H	J	P	BW
606□Y	5.67	3.31	3.15	2.36	0.47	2.36	0.47	0.39	0.35	1.38	4.33	1.61
607□Y	5.67	3.31	3.15	2.36	0.47	2.36	0.47	0.39	0.35	1.38	4.33	1.85
608□Y	5.67	3.90	3.54	2.36	0.47	2.95	0.47	0.51	0.35	1.46	5.28	2.05
609□Y	7.09	5.31	3.94	2.95	0.59	3.54	0.59	0.47	0.43	1.57	5.91	2.36
610□Y	7.09	5.31	3.94	2.95	0.59	3.54	0.59	0.47	0.43	1.57	5.91	2.36
610HY	7.09	5.31	4.72	2.95	0.59	3.54	0.59	0.47	0.43	1.57	5.91	2.36

Model CNHM	Low Speed Shaft				
	U*	V	S	L1	Key
606□Y	0.500	0.98	10-32UNF	0.63	1/8 X 1/8 X 0.79
607□Y	0.750	1.18	12-28UNF	0.63	3/16 X 3/16 X 1.06
608□Y	0.875	1.38	12-28 UNF	0.63	3/16 X 3/16 X 1.18
609□Y	1.125	1.38	5/16-18UNC	0.79	1/4 X 1/4 X 1.18
610□Y	1.125	1.38	5/16-18UNC	0.79	1/4 X 1/4 X 1.18
610HY	1.125	1.38	5/16-18UNC	0.79	1/4 X 1/4 X 1.18

*** Shaft Tolerances:**

Shaft Nominal Diameter (inches)	Tolerances (inches)
0.500 (1/2) through 0.625 (5/8)	+0.0000/-0.0004
0.750 (3/4) through 1.125 (1 1/8)	+0.0000/-0.0005
1.25 (1 1/4) through 1.875 (1 7/8)	+0.0000/-0.0006

Model	Motor		Without Brake						Appx Wt (lb)	With Brake								Appx Wt (lb)
	HP	Pole	C	O	O1	AB	L	MP		C	O	O1	AB	L	MP	MS	MT	
CNHM01-606□Y	1/8	4	8.90	-	5.51	3.35	1.38	4.69	13	10.28	-	5.43	3.50	2.76	4.88	1.93	-	15
CNHM02-606□Y	1/4	4	10.55	-	5.43	3.35	2.32	4.88	15	11.81	-	5.43	3.50	3.58	4.88	2.40	-	18
CNHM03-606□Y	1/3	4	10.55	-	5.43	3.35	2.32	4.88	15	11.81	-	5.43	3.50	3.58	4.88	2.40	-	18
CNHM01-607□Y	1/8	4	9.13	-	5.51	3.35	1.38	4.69	13	10.51	-	5.43	3.50	2.76	4.88	1.93	-	15
CNHM02-607□Y	1/4	4	10.79	-	5.43	3.35	2.32	4.88	15	12.05	-	5.43	3.50	3.58	4.88	2.40	-	18
CNHM03-607□Y	1/3	4	10.79	-	5.43	3.35	2.32	4.88	15	12.05	-	5.43	3.50	3.58	4.88	2.40	-	18
CNHM05-607□Y	1/2	4	11.57	-	5.43	3.35	2.32	4.88	18	12.83	-	5.43	3.50	3.58	4.88	2.40	-	20
CNHM01-608□Y	1/8	4	10.16	-	6.18	3.35	1.38	4.69	20	11.54	-	6.18	3.50	2.76	4.88	1.93	-	22
CNHM02-608□Y	1/4	4	11.81	-	6.18	3.35	2.32	4.88	22	13.07	-	6.18	3.50	3.58	4.88	2.40	-	24
CNHM03-608□Y	1/3	4	11.81	-	6.18	3.35	2.32	4.88	22	13.07	-	6.18	3.50	3.58	4.88	2.40	-	24
CNHM05-608□Y	1/2	4	12.60	-	6.18	3.35	2.32	4.88	26	13.86	-	6.18	3.50	3.58	4.88	2.40	-	29
CNHM08-608□Y	3/4	4	14.21	7.99	-	4.49	3.82	5.83	35	15.91	7.99	-	5.59	5.51	5.83	3.66	4.17	37
CNHM1-608□Y	1	4	14.21	7.99	-	4.49	3.82	5.83	35	15.91	7.99	-	5.59	5.51	5.83	3.66	4.17	37
CNHM01-609□Y	1/8	4	10.87	-	6.89	3.35	1.38	4.69	24	12.24	-	6.89	3.50	2.76	4.88	1.93	-	29
CNHM02-609□Y	1/4	4	12.52	-	6.89	3.35	2.32	4.88	26	13.78	-	6.89	3.50	3.58	4.88	2.40	-	31
CNHM03-609□Y	1/3	4	12.52	-	6.89	3.35	2.32	4.88	26	13.78	-	6.89	3.50	3.58	4.88	2.40	-	31

Note: [1] 0 or 5 replaces □ depending on the model selected for the application. Please refer to the Gearmotor Selection Procedure and Tables in this section.

Dimensions shown are for reference only and are subject to change without notice, unless certified.
Certified prints are available after receipt of an order; consult factory.

CNHM – 606□~610H[1] (con't.)

Inch (in)

Model	Motor		Without Brake						Appx Wt (lb)	With Brake								Appx Wt (lb)
	HP	Pole	C	O	O1	AB	L	MP		C	O	O1	AB	L	MP	MS	MT	
CNHM05-609□Y	1/2	4	13.31	-	6.89	3.35	2.32	4.88	29	14.57	-	6.89	3.50	3.58	4.88	2.40	-	33
CNHM08-609□Y	3/4	4	14.92	8.39	-	4.49	3.82	5.83	37	16.61	8.39	-	5.59	5.51	5.83	3.66	4.17	44
CNHM1-609□Y	1	4	14.92	8.39	-	4.49	3.82	5.83	37	16.61	8.39	-	5.59	5.51	5.83	3.66	4.17	44
CNHM1H-609□Y	1.5	4	16.22	8.66	-	4.69	3.94	6.30	44	18.66	8.66	-	5.79	6.38	6.30	4.53	4.49	55
CNHM2-609□Y	2	4	16.22	8.66	-	4.69	3.94	6.30	44	18.66	8.66	-	5.79	6.38	6.30	4.53	4.49	55
CNHM02-610□Y	1/4	4	13.07	8.15	-	3.35	2.32	4.88	37	14.33	8.15	-	3.50	3.58	4.88	2.40	-	42
CNHM03-610□Y	1/3	4	13.07	8.15	-	3.35	2.32	4.88	37	14.33	8.15	-	3.50	3.58	4.88	2.40	-	42
CNHM05-610□Y	1/2	4	13.86	8.15	-	3.35	2.32	4.88	40	15.12	8.15	-	3.50	3.58	4.88	2.40	-	44
CNHM08-610□Y	3/4	4	15.47	8.39	-	4.49	3.82	5.83	49	17.17	8.39	-	5.59	5.51	5.83	3.66	4.17	55
CNHM1-610□Y	1	4	15.47	8.39	-	4.49	3.82	5.83	49	17.17	8.39	-	5.59	5.51	5.83	3.66	4.17	55
CNHM1H-610□Y	1.5	4	16.77	8.66	-	4.69	3.94	6.30	57	19.21	8.66	-	5.79	6.38	6.30	4.53	4.49	68
CNHM2-610□Y	2	4	16.77	8.66	-	4.69	3.94	6.30	57	19.21	8.66	-	5.79	6.38	6.30	4.53	4.49	68
CNHM3-610□Y	3	4	17.56	8.90	-	4.96	4.13	6.81	66	20.04	8.90	-	6.06	6.61	6.81	4.76	4.88	79
CNHM02-610HY	1/4	4	13.07	8.94	-	3.35	2.32	4.88	40	14.33	8.94	-	3.50	3.58	4.88	2.40	-	44
CNHM03-610HY	1/3	4	13.07	8.94	-	3.35	2.32	4.88	40	14.33	8.94	-	3.50	3.58	4.88	2.40	-	44
CNHM05-610HY	1/2	4	13.86	8.94	-	3.35	2.32	4.88	42	15.12	8.94	-	3.50	3.58	4.88	2.40	-	46
CNHM08-610HY	3/4	4	15.47	9.17	-	4.49	3.82	5.83	51	17.17	9.17	-	5.59	5.51	5.83	3.66	4.17	57
CNHM1-610HY	1	4	15.47	9.17	-	4.49	3.82	5.83	51	17.17	9.17	-	5.59	5.51	5.83	3.66	4.17	57
CNHM1H-610HY	1.5	4	16.77	9.45	-	4.69	3.94	6.30	60	19.21	9.45	-	5.79	6.38	6.30	4.53	4.49	71
CNHM2-610HY	2	4	16.77	9.45	-	4.69	3.94	6.30	60	19.21	9.45	-	5.79	6.38	6.30	4.53	4.49	71
CNHM3-610HY	3	4	17.56	9.69	-	4.96	4.13	6.81	68	20.04	9.69	-	6.06	6.61	6.81	4.76	4.88	82

Note: [1] 0 or 5 replaces □ depending on the model selected for the application. Please refer to the Gearmotor Selection Procedure and Tables in this section.

INTEGRAL FOOT MOUNT
SINGLE REDUCTION

CNHM – 606□~610H[1]

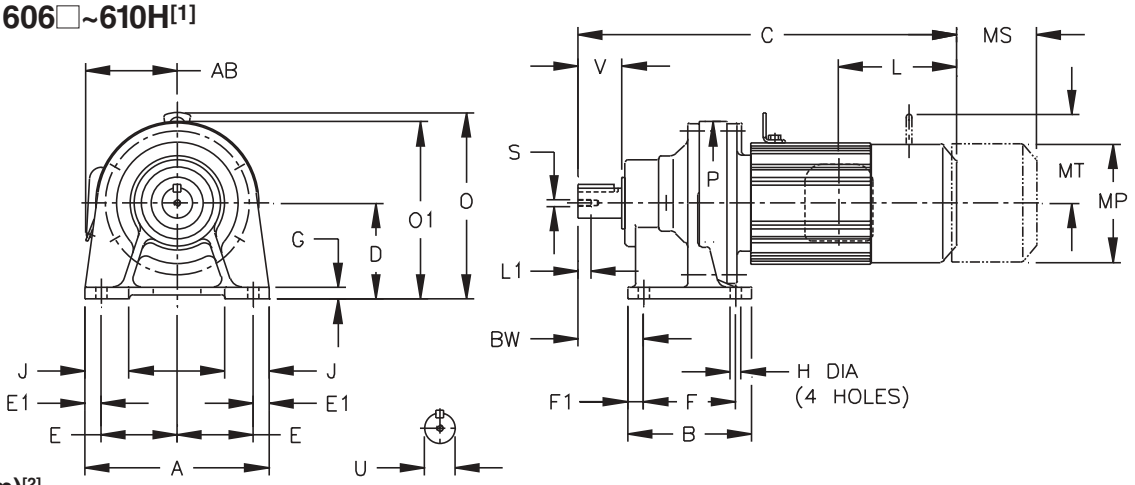

Metric (mm)[2]

Model CNHM	A	B	D	E	E1	F	F1	G	H	J	P	BW
606 □	144	84	80	60	12	60	12	10	9	35	110	41
607 □	144	84	80	60	12	60	12	10	9	35	110	47
608 □	144	99	90	60	12	75	12	13	9	37	134	52
609 □	180	135	100	75	15	90	15	12	11	40	150	60
610 □	180	135	100	75	15	90	15	12	11	40	150	60
610H□	180	135	120	75	15	90	15	12	11	40	150	60

Model CNHM	Low Speed Shaft				
	U h6	V	S	L1	Key
606□	14	25	M5	16	5 X 5 X 20
607□	18	30	M6	16	6 X 6 X 25
608□	22	35	M6	16	6 X 6 X 30
609□	28	35	M8	20	8 X 7 X 32
610□	28	35	M8	20	8 X 7 X 32
610H	28	35	M8	20	8 X 7 X 32

Model	Motor		Without Brake						Appx Wt (lb)	With Brake								Appx Wt (lb)
	kW	Pole	C	O	O1	AB	L	MP		C	O	O1	AB	L	MP	MS	MT	
CNHM01-606□	0.1	4	226	-	140	85	35	119	6	261	-	138	89	70	124	49	-	7
CNHM02-606□	0.2	4	268	-	138	85	59	124	7	300	-	138	89	91	124	61	-	8
CNHM03-606□	0.25	4	268	-	138	85	59	124	7	300	-	138	89	91	124	61	-	8
CNHM01-607□	0.1	4	232	-	140	85	35	119	6	267	-	138	89	70	124	49	-	7
CNHM02-607□	0.2	4	274	-	138	85	59	124	7	306	-	138	89	91	124	61	-	8
CNHM03-607□	0.25	4	274	-	138	85	59	124	7	306	-	138	89	91	124	61	-	8
CNHM05-607□	0.4	4	294	-	138	85	59	124	8	326	-	138	89	91	124	61	-	9
CNHM01-608□	0.1	4	258	-	157	85	35	119	9	293	-	157	89	70	124	49	-	10
CNHM02-608□	0.2	4	300	-	157	85	59	124	10	332	-	157	89	91	124	61	-	11
CNHM03-608□	0.25	4	300	-	157	85	59	124	10	332	-	157	89	91	124	61	-	11
CNHM05-608□	0.4	4	320	-	157	85	59	124	12	352	-	157	89	91	124	61	-	13
CNHM08-608□	0.55	4	361	203	-	114	97	148	16	404	203	-	142	140	148	93	106	17
CNHM1-608□	0.75	4	361	203	-	114	97	148	16	404	203	-	142	140	148	93	106	17
CNHM01-609□	0.1	4	276	-	175	85	35	119	11	311	-	175	89	70	124	49	-	13
CNHM02-609□	0.2	4	318	-	175	85	59	124	12	350	-	175	89	91	124	61	-	14
CNHM03-609□	0.25	4	318	-	175	85	59	124	12	350	-	175	89	91	124	61	-	14

Notes: [1] 0 or 5 replaces □ depending on the model selected for the application. Please refer to the Gearmotor Selection Procedure and Tables in this section.
[2] The shaft dimensions shown above are hard metric sizes with metric keys. Units are available with shafting made to either DIN/ISO or JIS tolerances. Please consult factory for availability.

Dimensions shown are for reference only and are subject to change without notice, unless certified.
Certified prints are available after receipt of an order; consult factory.

CNHM – 606□~610H[1] (con't.)

Metric (mm)

Model	Motor		Without Brake						Appx Wt (kg)	With Brake								Appx Wt (kg)
	kW	Pole	C	O	O1	AB	L	MP		C	O	O1	AB	L	MP	MS	MT	
CNHM05-609□	0.4	4	338	-	175	85	59	124	13	370	-	175	89	91	124	61	-	15
CNHM08-609□	0.55	4	379	213	-	114	97	148	17	422	213	-	142	140	148	93	106	20
CNHM1-609□	0.75	4	379	213	-	114	97	148	17	422	213	-	142	140	148	93	106	20
CNHM1H-609□	1.1	4	412	220	-	119	100	160	20	474	220	-	147	162	160	115	114	25
CNHM2-609□	1.5	4	412	220	-	119	100	160	20	474	220	-	147	162	160	115	114	25
CNHM02-610□	0.2	4	332	207	-	85	59	124	17	364	207	-	89	91	124	61	-	19
CNHM03-610□	0.25	4	332	207	-	85	59	124	17	364	207	-	89	91	124	61	-	19
CNHM05-610□	0.4	4	352	207	-	85	59	124	18	384	207	-	89	91	124	61	-	20
CNHM08-610□	0.55	4	393	213	-	114	97	148	22	436	213	-	142	140	148	93	106	25
CNHM1-610□	0.75	4	393	213	-	114	97	148	22	436	213	-	142	140	148	93	106	25
CNHM1H-610□	1.1	4	426	220	-	119	100	160	26	488	220	-	147	162	160	115	114	31
CNHM2-610□	1.5	4	426	220	-	119	100	160	26	488	220	-	147	162	160	115	114	31
CNHM3-610□	2.2	4	446	226	-	126	105	173	30	509	226	-	154	168	173	121	124	36
CNHM02-610H	0.2	4	332	227	-	85	59	124	18	364	227	-	89	91	124	61	-	20
CNHM03-610H	0.25	4	332	227	-	85	59	124	18	364	227	-	89	91	124	61	-	20
CNHM05-610H	0.4	4	352	227	-	85	59	124	19	384	227	-	89	91	124	61	-	21
CNHM08-610H	0.55	4	393	233	-	114	97	148	23	436	233	-	142	140	148	93	106	26
CNHM1-610H	0.75	4	393	233	-	114	97	148	23	436	233	-	142	140	148	93	106	26
CNHM1H-610H	1.1	4	426	240	-	119	100	160	27	488	240	-	147	162	160	115	114	32
CNHM2-610H	1.5	4	426	240	-	119	100	160	27	488	240	-	147	162	160	115	114	32
CNHM3-610H	2.2	4	446	246	-	126	105	173	31	509	246	-	154	168	173	121	124	37

Note: [1] 0 or 5 replaces □ depending on the model selected for the application. Please refer to the Gearmotor Selection Procedure and Tables in this section.

INTEGRAL FOOT MOUNT
SINGLE REDUCTION

CNHM – 611□~612H[1]

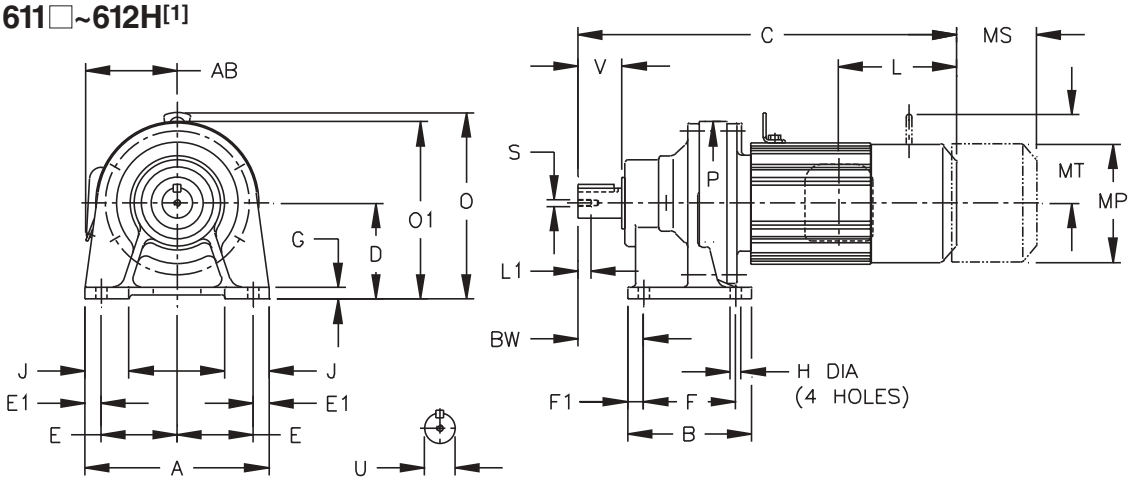

Inch (in)

Model CNHM	A	B	D	E	E1	F	F1	G	H	J	P	BW
611□Y	7.09	5.31	4.724	2.95	0.59	3.54	0.59	0.47	0.43	1.77	6.38	2.76
612□Y	9.06	6.10	4.724	3.74	0.79	4.53	0.79	0.59	0.55	2.17	8.03	3.23
612HY	9.06	6.10	5.512	3.74	0.79	4.53	0.79	0.59	0.55	2.36	8.03	3.23

Model CNHM	Low Speed Shaft				
	U*	V	S	L1	Key
611□Y	1.250	1.77	5/16-18UNC	0.79	1/4 X 1/4 X 1.46
612□Y	1.500	2.17	5/16-18UNC	0.79	3/8 X 3/8 X 1.77
612HY	1.500	2.17	5/16-18UNC	0.79	3/8 X 3/8 X 1.77

*** Shaft Tolerances:**

Shaft Nominal Diameter (inches)	Tolerances (inches)
0.500 (1/2) through 0.625 (5/8)	+0.0000/-0.0004
0.750 (3/4) through 1.125 (1 1/8)	+0.0000/-0.0005
1.25 (1 1/4) through 1.875 (1 7/8)	+0.0000/-0.0006

Model	Motor		Without Brake					Appx Wt (lb)	With Brake							Appx Wt (lb)
	HP	Pole	C	O	AB	L	MP		C	O	AB	L	MP	MS	MT	
CNHM05-611□Y	1/2	4	14.29	9.29	3.35	2.32	4.88	42	15.51	9.29	3.50	3.58	4.88	2.40	-	44
CNHM08-611□Y	3/4	4	15.87	9.29	4.49	3.82	5.83	49	17.80	9.29	5.59	5.51	5.83	3.66	4.17	55
CNHM1-611□Y	1	4	15.87	9.29	4.49	3.82	5.83	49	17.80	9.29	5.59	5.51	5.83	3.66	4.17	55
CNHM1H-611□Y	1.5	4	17.17	9.45	4.69	3.94	6.30	55	19.41	9.45	5.79	6.38	6.30	4.53	4.49	66
CNHM2-611□Y	2	4	17.17	9.45	4.69	3.94	6.30	55	19.41	9.45	5.79	6.38	6.30	4.53	4.49	66
CNHM3-611□Y	3	4	17.95	9.69	4.96	4.13	6.81	64	20.43	9.69	6.06	6.61	6.81	4.76	4.88	77
CNHM5-611□Y	5	4	19.33	10.47	5.79	5.00	8.35	86	22.17	10.47	6.69	7.83	8.35	5.20	6.18	108
CNHM08-612□Y	3/4	4	16.65	9.17	4.49	3.82	5.83	68	18.35	9.17	5.59	5.51	5.83	3.66	4.17	75
CNHM1-612□Y	1	4	16.65	9.17	4.49	3.82	5.83	68	18.35	9.17	5.59	5.51	5.83	3.66	4.17	75
CNHM1H-612□Y	1.5	4	17.95	9.45	4.69	3.94	6.30	77	20.39	9.45	5.79	6.38	6.30	4.53	4.49	88
CNHM2-612□Y	2	4	17.95	9.45	4.69	3.94	6.30	77	20.39	9.45	5.79	6.38	6.30	4.53	4.49	88
CNHM3-612□Y	3	4	18.74	9.69	4.96	4.13	6.81	86	21.22	9.69	6.06	6.61	6.81	4.76	4.88	101
CNHM5-612□Y	5	4	19.65	10.47	5.79	5.00	8.35	108	22.48	10.47	6.69	7.83	8.35	5.20	6.18	130
CNHM8-612□Y	7.5	4	21.38	10.47	5.79	5.00	8.35	123	24.21	10.47	6.69	7.83	8.35	5.20	6.18	146
CNHM08-612HY	3/4	4	16.65	9.96	4.49	3.82	5.83	71	18.35	9.96	5.59	5.51	5.83	3.66	4.17	77
CNHM1-612HY	1	4	16.65	9.96	4.49	3.82	5.83	71	18.35	9.96	5.59	5.51	5.83	3.66	4.17	77
CNHM1H-612HY	1.5	4	17.95	10.24	4.69	3.94	6.30	79	20.39	10.24	5.79	6.38	6.30	4.53	4.49	90
CNHM2-612HY	2	4	17.95	10.24	4.69	3.94	6.30	79	20.39	10.24	5.79	6.38	6.30	4.53	4.49	90
CNHM3-612HY	3	4	18.74	10.47	4.96	4.13	6.81	88	21.22	10.47	6.06	6.61	6.81	4.76	4.88	104
CNHM5-612HY	5	4	19.65	11.26	5.79	5.00	8.35	110	22.48	11.26	6.69	7.83	8.35	5.20	6.18	132
CNHM8-612HY	7.5	4	21.38	11.26	5.79	5.00	8.35	126	24.21	11.26	6.69	7.83	8.35	5.20	6.18	148

Note: [1] 0 or 5 replaces □ depending on the model selected for the application. Please refer to the Gearmotor Selection Procedure and Tables in this section.

Dimensions shown are for reference only and are subject to change without notice, unless certified.
Certified prints are available after receipt of an order; consult factory.

CNHM – 611□~612H[1] (con't.)

Metric (mm)[2]

Model CNHM	A	B	D	E	E1	F	F1	G	H	J	P	BW
611□	180	135	120	75	15	90	15	12	11	45	162	70
612□	230	155	120	95	20	115	20	15	14	55	204	82
612H	230	155	140	95	20	115	20	15	14	60	204	82

Model CNHM	Low Speed Shaft				
	U h6	V	S	L1	Key
611□	32	45	M8	20	10 X 8 X 37
612□	38	55	M8	20	10 X 8 X 50
612H	38	55	M8	20	10 X 8 X 50

Model	Motor		Without Brake					Appx Wt (kg)	With Brake							Appx Wt (kg)
	kW	Pole	C	O	AB	L	MP		C	O	AB	L	MP	MS	MT	
CNHM05-611□	0.4	4	363	236	85	59	124	19	394	236	89	91	124	61	-	20
CNHM08-611□	0.55	4	403	236	114	97	148	22	452	236	142	140	148	93	106	25
CNHM1-611□	0.75	4	403	236	114	97	148	22	452	236	142	140	148	93	106	25
CNHM1H-611□	1.1	4	436	240	119	100	160	25	493	240	147	162	160	115	114	30
CNHM2-611□	1.5	4	436	240	119	100	160	25	493	240	147	162	160	115	114	30
CNHM3-611□	2.2	4	456	246	126	105	173	29	519	246	154	168	173	121	124	35
CNHM5-611□	3.7	4	491	266	147	127	212	39	563	266	170	199	212	132	157	49
CNHM08-612□	0.55	4	423	233	114	97	148	31	466	233	142	140	148	93	106	34
CNHM1-612□	0.75	4	423	233	114	97	148	31	466	233	142	140	148	93	106	34
CNHM1H-612□	1.1	4	456	240	119	100	160	35	518	240	147	162	160	115	114	40
CNHM2-612□	1.5	4	456	240	119	100	160	35	518	240	147	162	160	115	114	40
CNHM3-612□	2.2	4	476	246	126	105	173	39	539	246	154	168	173	121	124	46
CNHM5-612□	3.7	4	499	266	147	127	212	49	571	266	170	199	212	132	157	59
CNHM8-612□	5.5	4	543	266	147	127	212	56	615	266	170	199	212	132	157	66
CNHM08-612H	0.55	4	423	253	114	97	148	32	466	253	142	140	148	93	106	35
CNHM1-612H	0.75	4	423	253	114	97	148	32	466	253	142	140	148	93	106	35
CNHM1H-612H	1.1	4	456	260	119	100	160	36	518	260	147	162	160	115	114	41
CNHM2-612H	1.5	4	456	260	119	100	160	36	518	260	147	162	160	115	114	41
CNHM3-612H	2.2	4	476	266	126	105	173	40	539	266	154	168	173	121	124	47
CNHM5-612H	3.7	4	499	286	147	127	212	50	571	286	170	199	212	132	157	60
CNHM8-612H	5.5	4	543	286	147	127	212	57	615	286	170	199	212	132	157	67

Notes: [1] 0 or 5 replaces □ depending on the model selected for the application. Please refer to the Gearmotor Selection Procedure and Tables in this section.
[2] The shaft dimensions shown above are hard metric sizes with metric keys. Units are available with shafting made to either DIN/ISO or JIS tolerances. Please consult factory for availability.

INTEGRAL FOOT MOUNT
SINGLE REDUCTION

CHHM – 613□~616H[1]

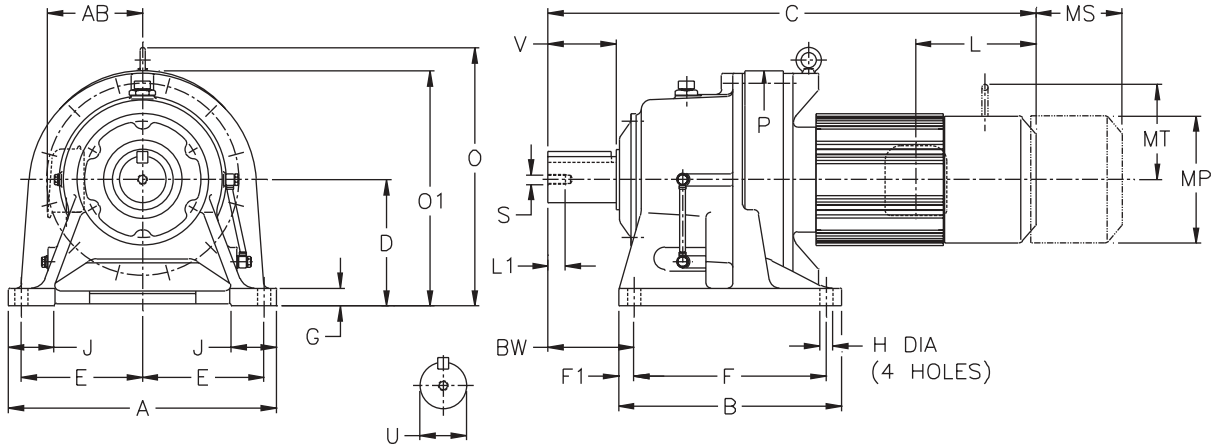

Inch (in)

Model CHHM	A	B	D	E	E1	F	F1	G	H	J	P	BW
613□Y	12.99	7.68	5.906	5.71	0.79	5.71	0.98	0.87	0.71	2.56	9.06	3.94
614□Y	12.99	7.68	5.906	5.71	0.79	5.71	0.98	0.87	0.71	2.56	9.06	4.72
614HY	12.99	7.68	6.299	5.71	0.79	5.71	0.98	0.87	0.71	2.76	9.06	4.72
616□Y	16.14	9.37	6.299	7.28	0.79	5.91	1.73	0.98	0.71	2.95	12.52	5.47
616HY	16.14	9.37	7.874	7.28	0.79	5.91	1.73	0.98	0.71	3.15	12.52	5.47

Model CHHM	Low Speed Shaft				
	U*	V	S	L1	Key
613□Y	1.875	2.76	3/8-16UNC	0.71	1/2 X 1/2 X 2.16
614□Y	1.875	3.54	3/8-16UNC	0.71	1/2 X 1/2 X 2.95
614HY	1.875	3.54	3/8-16UNC	0.71	1/2 X 1/2 X 2.95
616□Y	2.250	3.54	3/8-16UNC	0.71	1/2 X 1/2 X 2.95
616HY	2.250	3.54	3/8-16UNC	0.71	1/2 X 1/2 X 2.95

*** Shaft Tolerances:**

Shaft Nominal Diameter (inches)	Tolerances (inches)
0.500 (1/2) through 0.625 (5/8)	+0.0000/-0.0004
0.750 (3/4) through 1.125 (1 1/8)	+0.0000/-0.0005
1.25 (1 1/4) through 1.875 (1 7/8)	+0.0000/-0.0006
2.000 (2) through 3.125 (3 1/8)	+0.0000/-0.0007
3.250 (3 1/4) through 4.625 (4 5/8)	+0.0000/-0.0009
4.750 (4 3/4) through 7.00 (7)	+0.0000/-0.0010

Model	Motor		Without Brake					Appx Wt (lb)	With Brake							Appx Wt (lb)
	HP	Pole	C	O	AB	L	MP		C	O	AB	L	MP	MS	MT	
CHHM1-613□Y	1	4	18.78	10.43	4.49	3.82	5.83	110	20.47	10.43	5.59	5.51	5.83	3.66	4.17	117
CHHM1H-613□Y	1.5	4	20.08	10.55	4.69	3.94	6.30	119	22.52	10.55	5.79	6.38	6.30	4.53	4.49	130
CHHM2-613□Y	2	4	20.08	10.55	4.69	3.94	6.30	119	22.52	10.55	5.79	6.38	6.30	4.53	4.49	130
CHHM3-613□Y	3	4	20.87	10.79	4.96	4.13	6.81	126	23.35	10.79	6.06	6.61	6.81	4.76	4.88	141
CHHM5-613□Y	5	4	21.77	11.65	5.79	5.00	8.35	148	24.61	11.65	6.69	7.83	8.35	5.20	6.18	170
CHHM8-613□Y	7.5	4	23.50	11.65	5.79	5.00	8.35	163	26.34	11.65	6.69	7.83	8.35	5.20	6.18	185
CHHM10-613□Y	10	4	24.41	12.72	7.40	5.63	9.88	196	28.15	12.72	7.40	9.37	9.88	6.69	7.17	236
CHHM15-613□Y	15	4	26.77	12.72	7.40	5.63	9.88	227	30.51	12.72	7.40	9.37	9.88	6.69	7.17	265

Note: [1] 0 or 5 replaces □ depending on the model selected for the application. Please refer to the Gearmotor Selection Procedure and Tables in this section.

Dimensions shown are for reference only and are subject to change without notice, unless certified.
Certified prints are available after receipt of an order; consult factory.

CHHM – 613□~616H[1] (con't.)

Inch (in)

Model	Motor		Without Brake					Appx Wt (lb)	With Brake							Appx Wt (lb)
	HP	Pole	C	O	AB	L	MP		C	O	AB	L	MP	MS	MT	
CHHM1H-614□Y	1.5	4	20.87	10.55	4.69	3.94	6.30	121	23.31	10.55	5.79	6.38	6.30	4.53	4.49	132
CHHM2-614□Y	2	4	20.87	10.55	4.69	3.94	6.30	121	23.31	10.55	5.79	6.38	6.30	4.53	4.49	132
CHHM3-614□Y	3	4	21.65	10.79	4.96	4.13	6.81	128	24.13	10.79	6.06	6.61	6.81	4.76	4.88	143
CHHM5-614□Y	5	4	22.56	11.65	5.79	5.00	8.35	150	25.39	11.65	6.69	7.83	8.35	5.20	6.18	172
CHHM8-614□Y	7.5	4	24.29	11.65	5.79	5.00	8.35	165	27.13	11.65	6.69	7.83	8.35	5.20	6.18	187
CHHM10-614□Y	10	4	25.20	12.72	7.40	5.63	9.88	198	28.94	12.72	7.40	9.37	9.88	6.69	7.17	238
CHHM15-614□Y	15	4	27.56	12.72	7.40	5.63	9.88	227	31.30	12.72	7.40	9.37	9.88	6.69	7.17	267
CHHM20-614□Y[2]	20	4	31.10	14.09	9.13	11.61	12.76	342	34.65	12.64	9.13	15.16	12.76	8.66	-	415
CHHM1H-614HY	1.5	4	20.87	10.94	4.69	3.94	6.30	126	23.31	10.94	5.79	6.38	6.30	4.53	4.49	137
CHHM2-614HY	2	4	20.87	10.94	4.69	3.94	6.30	126	23.31	10.94	5.79	6.38	6.30	4.53	4.49	137
CHHM3-614HY	3	4	21.65	11.18	4.96	4.13	6.81	132	24.13	11.18	6.06	6.61	6.81	4.76	4.88	148
CHHM5-614HY	5	4	22.56	12.05	5.79	5.00	8.35	154	25.39	12.05	6.69	7.83	8.35	5.20	6.18	176
CHHM8-614HY	7.5	4	24.29	12.05	5.79	5.00	8.35	170	27.13	12.05	6.69	7.83	8.35	5.20	6.18	192
CHHM10-614HY	10	4	25.20	13.11	7.40	5.63	9.88	203	28.94	13.11	7.40	9.37	9.88	6.69	7.17	243
CHHM15-614HY	15	4	27.56	13.11	7.40	5.63	9.88	234	31.30	13.11	7.40	9.37	9.88	6.69	7.17	273
CHHM20-614HY[2]	20	4	31.10	14.49	9.13	11.61	12.76	348	34.65	14.49	9.13	15.16	12.76	8.66	-	421
CHHM2-616□Y	2	4	22.95	12.20	4.69	3.94	6.30	205	25.39	12.20	5.79	6.38	6.30	4.53	4.49	216
CHHM3-616□Y	3	4	23.54	12.20	4.96	4.13	6.81	212	26.02	12.20	6.06	6.61	6.81	4.76	4.88	225
CHHM5-616□Y	5	4	24.45	12.20	5.79	5.00	8.35	232	27.28	12.20	6.69	7.83	8.35	5.20	6.18	254
CHHM8-616□Y	7.5	4	26.18	12.20	5.79	5.00	8.35	247	29.02	12.20	6.69	7.83	8.35	5.20	6.18	269
CHHM10-616□Y	10	4	27.28	13.11	7.40	5.63	9.88	282	31.02	13.11	7.40	9.37	9.88	6.69	7.17	320
CHHM15-616□Y	15	4	29.65	13.11	7.40	5.63	9.88	313	33.39	13.11	7.40	9.37	9.88	6.69	7.17	351
CHHM20-616□Y[2]	20	4	32.99	14.49	9.13	11.61	12.76	430	36.54	14.49	9.13	15.16	12.76	8.66	-	503
CHHM25-616□Y[2]	25	4	36.73	14.49	11.69	13.39	15.51	589	45.00	14.49	11.69	21.65	15.51	14.45	-	701
CHHM30-616□Y[2]	30	4	36.73	14.49	11.69	13.39	15.51	589	45.00	14.49	11.69	21.65	15.51	14.45	-	701
CHHM2-616HY	2	4	22.95	13.78	4.69	3.94	6.30	216	25.39	13.78	5.79	6.38	6.30	4.53	4.49	227
CHHM3-616HY	3	4	23.54	13.78	4.96	4.13	6.81	223	26.02	13.78	6.06	6.61	6.81	4.76	4.88	236
CHHM5-616HY	5	4	24.45	13.78	5.79	5.00	8.35	243	27.28	13.78	6.69	7.83	8.35	5.20	6.18	265
CHHM8-616HY	7.5	4	26.18	13.78	5.79	5.00	8.35	258	29.02	13.78	6.69	7.83	8.35	5.20	6.18	280
CHHM10-616HY	10	4	27.28	14.69	7.40	5.63	9.88	293	31.02	14.69	7.40	9.37	9.88	6.69	7.17	331
CHHM15-616HY	15	4	29.65	14.69	7.40	5.63	9.88	324	33.39	14.69	7.40	9.37	9.88	6.69	7.17	362
CHHM20-616HY	20	4	32.99	16.06	9.13	11.61	12.76	441	36.54	16.06	9.13	15.16	12.76	8.66	-	514
CHHM25-616HY	25	4	36.73	16.06	11.69	13.39	15.51	600	45.00	16.06	11.69	21.65	15.51	14.45	-	712
CHHM30-616HY	30	4	36.73	16.06	11.69	13.39	15.51	600	45.00	16.06	11.69	21.65	15.51	14.45	-	712

Notes: [1] 0 or 5 replaces □ depending on the model selected for the application. Please refer to the Gearmotor Selection Procedure and Tables in this section.
[2] The bottom level of the motor for this model extends lower than the reducer base.

INTEGRAL FOOT MOUNT
SINGLE REDUCTION

CHHM – 613□~616H[1]

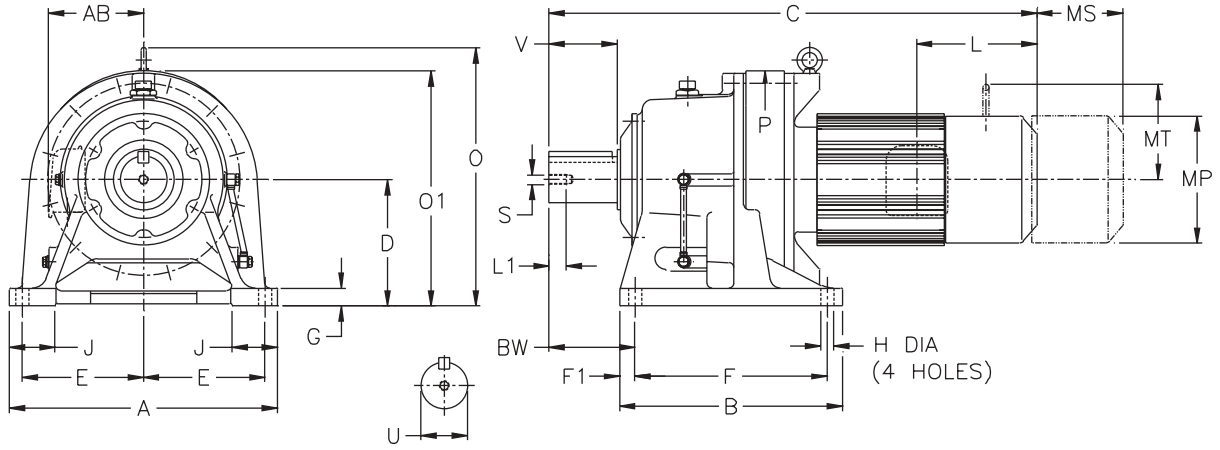

Metric (mm)[2]

Model CHHM	A	B	D	E	E1	F	F1	G	H	J	P	BW
613□	330	195	150	145	20	145	25	22	18	65	230	100
614□	330	195	150	145	20	145	25	22	18	65	230	120
614H	330	195	160	145	20	145	25	22	18	70	230	120
616□	410	238	160	185	20	150	44	25	18	75	318	139
616H	410	238	200	185	20	150	44	25	18	80	318	139

Model CHHM	Low Speed Shaft				
	U h6	V	S	L1	Key
613□	50	70	M10	18	14 X 9 X 56
614□	50	90	M10	18	14 X 9 X 80
614H	50	90	M10	18	14 X 9 X 80
616□	60	90	M10	18	18 X 11 X 80
616H	60	90	M10	18	18 X 11 X 80

Model	Motor		Without Brake					Appx Wt (kg)	With Brake							Appx Wt (kg)
	kW	Pole	C	O	AB	L	MP		C	O	AB	L	MP	MS	MT	
CHHM1-613□	0.75	4	477	265	114	97	148	50	520	265	142	140	148	93	106	53
CHHM1H-613□	1.1	4	510	268	119	100	160	54	572	268	147	162	160	115	114	59
CHHM2-613□	1.5	4	510	268	119	100	160	54	572	268	147	162	160	115	114	59
CHHM3-613□	2.2	4	530	274	126	105	173	57	593	274	154	168	173	121	124	64
CHHM5-613□	3.7	4	553	296	147	127	212	67	625	296	170	199	212	132	157	77
CHHM8-613□	5.5	4	597	296	147	127	212	74	669	296	170	199	212	132	157	84
CHHM10-613□	7.5	4	620	323	188	143	251	89	715	323	188	238	251	170	182	107
CHHM15-613□	11	4	680	323	188	143	251	103	775	323	188	238	251	170	182	120

Notes: [1] 0 or 5 replaces □ depending on the model selected for the application. Please refer to the Gearmotor Selection Procedure and Tables in this section.
[2] The shaft dimensions shown above are hard metric sizes with metric keys. Units are available with shafting made to either DIN/ISO or JIS tolerances. Please consult factory for availability.

Dimensions shown are for reference only and are subject to change without notice, unless certified.
Certified prints are available after receipt of an order; consult factory.

CHHM – 613□~616H[1] (con't.)

Metric (mm)

Model	Motor		Without Brake					Appx Wt (kg)	With Brake							Appx Wt (kg)
	kW	Pole	C	O	AB	L	MP		C	O	AB	L	MP	MS	MT	
CHHM1H-614□	1.1	4	530	268	119	100	160	55	592	268	147	162	160	115	114	60
CHHM2-614□	1.5	4	530	268	119	100	160	55	592	268	147	162	160	115	114	60
CHHM3-614□	2.2	4	550	274	126	105	173	58	613	274	154	168	173	121	124	65
CHHM5-614□	3.7	4	573	296	147	127	212	68	645	296	170	199	212	132	157	78
CHHM8-614□	5.5	4	617	296	147	127	212	75	689	296	170	199	212	132	157	85
CHHM10-614□	7.5	4	640	323	188	143	251	90	735	323	188	238	251	170	182	108
CHHM15-614□	11	4	700	323	188	143	251	103	795	323	188	238	251	170	182	121
CHHM20-614□[2]	15	4	790	358	232	295	324	155	880	321	232	385	324	220	-	188
CHHM1H-614H	1.1	4	530	278	119	100	160	57	592	278	147	162	160	115	114	62
CHHM2-614H	1.5	4	530	278	119	100	160	57	592	278	147	162	160	115	114	62
CHHM3-614H	2.2	4	550	284	126	105	173	60	613	284	154	168	173	121	124	67
CHHM5-614H	3.7	4	573	306	147	127	212	70	645	306	170	199	212	132	157	80
CHHM8-614H	5.5	4	617	306	147	127	212	77	689	306	170	199	212	132	157	87
CHHM10-614H	7.5	4	640	333	188	143	251	92	735	333	188	238	251	170	182	110
CHHM15-614H	11	4	700	333	188	143	251	106	795	333	188	238	251	170	182	124
CHHM20-614H[2]	15	4	790	368	232	295	324	158	880	368	232	385	324	220	-	191
CHHM2-616□	1.5	4	583	310	119	100	160	93	645	310	147	162	160	115	114	98
CHHM3-616□	2.2	4	598	310	126	105	173	96	661	310	154	168	173	121	124	102
CHHM5-616□	3.7	4	621	310	147	127	212	105	693	310	170	199	212	132	157	115
CHHM8-616□	5.5	4	665	310	147	127	212	112	737	310	170	199	212	132	157	122
CHHM10-616□	7.5	4	693	333	188	143	251	128	788	333	188	238	251	170	182	145
CHHM15-616□	11	4	753	333	188	143	251	142	848	333	188	238	251	170	182	159
CHHM20-616□[2]	15	4	838	368	232	295	324	195	928	368	232	385	324	220	-	228
CHHM25-616□[2]	18.5	4	933	368	297	340	394	267	1143	368	297	550	394	367	-	318
CHHM30-616□[2]	22	4	933	368	297	340	394	267	1143	368	297	550	394	367	-	318
CHHM2-616H	1.5	4	583	350	119	100	160	98	645	350	147	162	160	115	114	103
CHHM3-616H	2.2	4	598	350	126	105	173	101	661	350	154	168	173	121	124	107
CHHM5-616H	3.7	4	621	350	147	127	212	110	693	350	170	199	212	132	157	120
CHHM8-616H	5.5	4	665	350	147	127	212	117	737	350	170	199	212	132	157	127
CHHM10-616H	7.5	4	693	373	188	143	251	133	788	373	188	238	251	170	182	150
CHHM15-616H	11	4	753	373	188	143	251	147	848	373	188	238	251	170	182	164
CHHM20-616H	15	4	838	408	232	295	324	200	928	408	232	385	324	220	-	233
CHHM25-616H	18.5	4	933	408	297	340	394	272	1143	408	297	550	394	367	-	323
CHHM30-616H	22	4	933	408	297	340	394	272	1143	408	297	550	394	367	-	323

Notes: [1] 0 or 5 replaces □ depending on the model selected for the application. Please refer to the Gearmotor Selection Procedure and Tables in this section.
[2] The bottom level of the motor for this model extends lower than the reducer base.

INTEGRAL FOOT MOUNT
SINGLE REDUCTION

CHHM – 617□~6205[1]

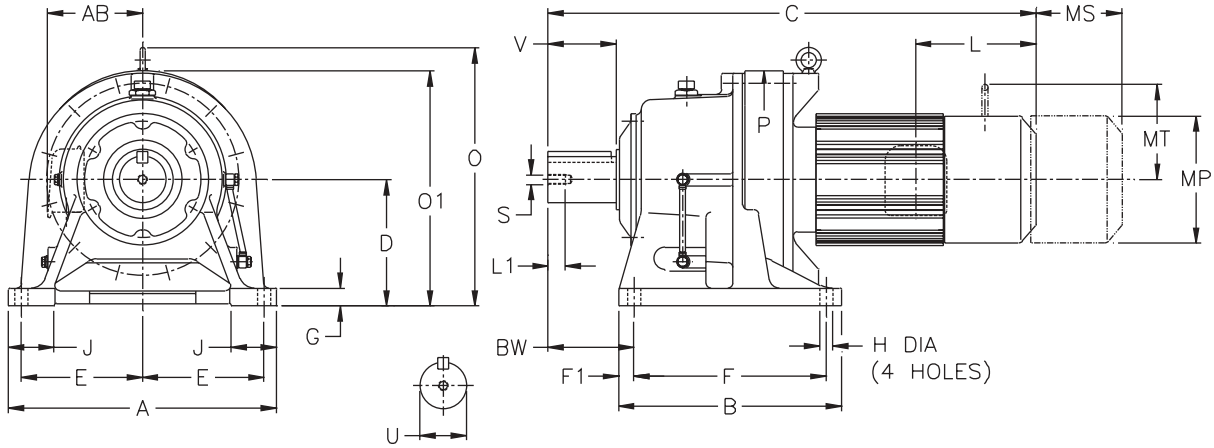

Inch (in)

Model CHHM	A	B	D	E	E1	F	F1	G	H	J	P	BW
617□Y	16.93	13.19	7.874	7.48	0.98	10.83	1.18	1.18	0.87	3.15	14.25	4.92
618□Y	18.50	14.96	8.661	8.27	0.98	12.60	1.18	1.18	0.87	3.35	15.35	5.71
619□Y	20.87	17.32	9.843	9.45	0.98	14.96	1.18	1.38	1.02	3.54	17.76	6.69
6205Y	20.87	17.32	9.843	8.66	1.77	14.17	1.57	1.38	1.02	3.94	18.54	8.46

Model CHHM	Low Speed Shaft				
	U*	V	S	L1	Key
617□Y	2.750	3.54	1/2-13UNC	0.94	5/8 X 5/8 X 3.15
618□Y	3.125	4.33	1/2-13UNC	0.94	3/4 X 3/4 X 3.74
619□Y	3.625	5.31	3/4-10UNC	1.34	7/8 X 7/8 X 4.92
6205Y	3.875	6.50	3/4-10UNC	1.34	1 X 1 X 6.50

*** Shaft Tolerances:**

Shaft Nominal Diameter (inches)	Tolerances (inches)
0.500 (1/2) through 0.625 (5/8)	+0.0000/-0.0004
0.750 (3/4) through 1.125 (1 1/8)	+0.0000/-0.0005
1.25 (1 1/4) through 1.875 (1 7/8)	+0.0000/-0.0006
2.000 (2) through 3.125 (3 1/8)	+0.0000/-0.0007
3.250 (3 1/4) through 4.625 (4 5/8)	+0.0000/-0.0009
4.750 (4 3/4) through 7.00 (7)	+0.0000/-0.0010

Model	Motor		Without Brake					Appx Wt (lb)	With Brake							Appx Wt (lb)
	HP	Pole	C	O	AB	L	MP		C	O	AB	L	MP	MS	MT	
CHHM5-617□Y	5	4	26.77	15.87	5.79	5.00	8.35	322	29.61	15.87	6.69	7.83	8.35	5.20	6.18	344
CHHM8-617□Y	7.5	4	28.50	15.87	5.79	5.00	8.35	337	31.34	15.87	6.69	7.83	8.35	5.20	6.18	359
CHHM10-617□Y	10	4	29.21	15.87	7.40	5.63	9.88	370	32.95	15.87	7.40	9.37	9.88	6.69	7.17	410
CHHM15-617□Y	15	4	31.57	15.87	7.40	5.63	9.88	401	35.31	15.87	7.40	9.37	9.88	6.69	7.17	441
CHHM20-617□Y	20	4	34.72	16.26	9.13	11.61	12.76	520	38.27	16.26	9.13	15.16	12.76	8.66	-	593
CHHM25-617□Y	25	4	38.46	16.81	11.69	13.39	15.51	670	46.73	16.81	11.69	21.65	15.51	14.45	-	783
CHHM30-617□Y	30	4	38.46	16.81	11.69	13.39	15.51	670	46.73	16.81	11.69	21.65	15.51	14.45	-	783
CHHM40-617□Y	40	4	38.46	16.85	11.69	13.39	15.51	708	46.73	16.81	11.69	21.65	15.51	14.57	-	803

Note: [1] 0 or 5 replaces □ depending on the model selected for the application. Please refer to the Gearmotor Selection Procedure and Tables in this section.

Dimensions shown are for reference only and are subject to change without notice, unless certified. Certified prints are available after receipt of an order; consult factory.

CHHM – 617□~6205[1] (con't.)

Inch (in)

Model	Motor		Without Brake					Appx Wt (lb)	With Brake							Appx Wt (lb)
	HP	Pole	C	O	AB	L	MP		C	O	AB	L	MP	MS	MT	
CHHM5-618□Y	5	4	28.23	17.24	5.79	5.00	8.35	404	31.06	17.24	6.69	7.83	8.35	5.20	6.18	426
CHHM8-618□Y	7.5	4	29.96	17.24	5.79	5.00	8.35	421	32.80	17.24	6.69	7.83	8.35	5.20	6.18	443
CHHM10-618□Y	10	4	30.67	17.24	7.40	5.63	9.88	454	34.41	17.24	7.40	9.37	9.88	6.69	7.17	494
CHHM15-618□Y	15	4	33.03	17.24	7.40	5.63	9.88	485	36.77	17.24	7.40	9.37	9.88	6.69	7.17	525
CHHM20-618□Y	20	4	36.18	17.24	9.13	11.61	12.76	617	39.72	17.24	9.13	15.16	12.76	8.66	-	679
CHHM25-618□Y	25	4	39.92	17.64	11.69	13.39	15.51	754	48.19	17.64	11.69	21.65	15.51	14.45	-	867
CHHM30-618□Y	30	4	39.92	17.64	11.69	13.39	15.51	754	48.19	17.64	11.69	21.65	15.51	14.45	-	867
CHHM40-618□Y	40	4	39.92	17.64	11.69	13.39	15.51	792	48.19	17.64	11.69	21.65	15.51	14.57	-	886
CHHM50-618□Y	50	4	44.45	18.94	11.69	16.93	15.51	897	52.91	18.94	11.69	25.39	15.51	17.52	-	1111
CHHM60-618□Y	60	4	44.45	18.94	11.69	16.93	15.51	897	52.91	18.94	11.69	25.39	15.51	17.52	-	1111
CHHM8-619□Y	7.5	4	33.74	20.12	5.79	5.00	8.35	584	36.57	20.12	6.69	7.83	8.35	5.20	6.18	606
CHHM10-619□Y	10	4	34.25	20.12	7.40	5.63	9.88	613	37.99	20.12	7.40	9.37	9.88	6.69	7.17	653
CHHM15-619□Y	15	4	36.61	20.12	7.40	5.63	9.88	644	40.35	20.12	7.40	9.37	9.88	6.69	7.17	684
CHHM20-619□Y	20	4	39.17	18.39	9.13	11.61	12.76	761	42.72	18.39	9.13	15.16	12.76	8.66	-	836
CHHM25-619□Y	25	4	42.91	20.12	11.69	13.39	15.51	919	51.18	20.12	11.69	21.65	15.51	14.45	-	1019
CHHM256-619□Y	25	6	42.91	20.12	11.69	13.39	15.51	953	51.18	20.12	11.69	21.65	15.51	14.45	-	1047
CHHM30-619□Y	30	4	42.91	20.12	11.69	13.39	15.51	919	51.18	20.12	11.69	21.65	15.51	14.45	-	1019
CHHM40-619□Y	40	4	42.91	20.12	11.69	13.39	15.51	953	51.18	20.12	11.69	21.65	15.51	14.57	-	1047
CHHM406-619□Y	40	6	47.44	20.12	11.69	16.93	15.51	1036	55.91	20.12	11.69	25.39	15.51	17.52	-	1250
CHHM50-619□Y	50	4	47.44	20.12	11.69	16.93	15.51	1036	55.91	20.12	11.69	25.39	15.51	17.52	-	1250
CHHM506-619□Y	50	6	47.44	20.12	11.69	16.93	15.51	1036	55.91	20.12	11.69	25.39	15.51	17.52	-	1250
CHHM60-619□Y	60	4	47.44	20.12	11.69	16.93	15.51	1036	55.91	20.12	11.69	25.39	15.51	17.52	-	1250
CHHM15-6205Y	15	4	38.27	20.87	7.40	5.63	9.88	690	42.01	20.87	7.40	9.37	9.88	6.69	7.17	730
CHHM20-6205Y	20	4	41.02	20.87	9.13	11.61	12.76	809	44.57	20.87	9.13	15.16	12.76	8.66	-	886
CHHM206-6205Y	20	6	44.37	20.87	11.69	13.39	15.51	966	52.64	20.87	11.69	21.65	15.51	14.45	-	1065
CHHM25-6205Y	25	4	44.37	20.87	11.69	13.39	15.51	966	52.64	20.87	11.69	21.65	15.51	14.45	-	1065
CHHM30-6205Y	30	4	44.37	20.87	11.69	13.39	15.51	966	52.64	20.87	11.69	21.65	15.51	14.45	-	1065
CHHM306-6205Y	30	6	44.37	20.87	11.69	13.39	15.51	994	52.64	20.87	11.69	21.65	15.51	14.57	-	1094
CHHM40-6205Y	40	4	44.37	20.87	11.69	13.39	15.51	994	52.64	20.87	11.69	21.65	15.51	14.57	-	1094
CHHM406-6205Y	40	6	48.90	20.87	11.69	16.93	15.51	1078	57.36	20.87	11.69	25.39	15.51	17.52	-	1286
CHHM50-6205Y	50	4	48.90	20.87	11.69	16.93	15.51	1078	57.36	20.87	11.69	25.39	15.51	17.52	-	1286
CHHM506-6205Y	50	6	48.90	20.87	11.69	16.93	15.51	1078	57.36	20.87	11.69	25.39	15.51	17.52	-	1286
CHHM60-6205Y	60	4	48.90	20.87	11.69	16.93	15.51	1078	57.36	20.87	11.69	25.39	15.51	17.52	-	1286
CHHM606-6205Y	60	6	51.06	22.64	16.22	18.31	19.06	1283	-	-	-	-	-	-	-	-
CHHM75-6205Y	75	4	51.06	22.64	16.22	18.31	19.06	1283	-	-	-	-	-	-	-	-

Note: [1] 0 or 5 replaces □ depending on the model selected for the application. Please refer to the Gearmotor Selection Procedure and Tables in this section.

INTEGRAL FOOT MOUNT
SINGLE REDUCTION

CHHM – 617□~6205[1]

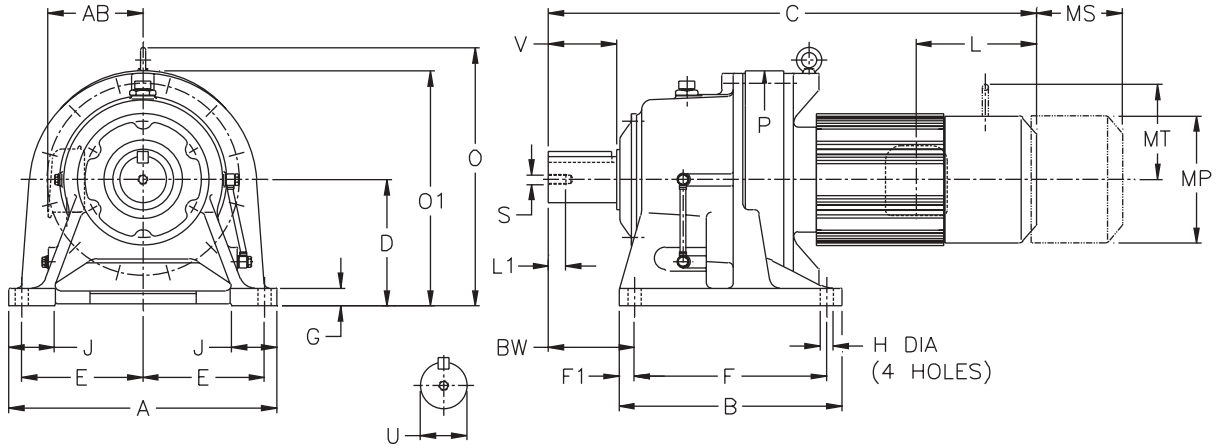

Metric (mm)[2]

Model CHHM	A	B	D	E	E1	F	F1	G	H	J	P	BW
617□	430	335	200	190	25	275	30	30	22	80	362	125
618□	470	380	220	210	25	320	30	30	22	85	390	145
619□	530	440	250	240	25	380	30	35	26	90	451	170
6205	530	440	250	220	45	360	40	35	26	100	471	215

Model CHHM	Low Speed Shaft				
	U h6	V	S	L1	Key
617□	70	90	M12	24	20 X 12 X 80
618□	80	110	M12	24	22 X 14 X 100
619□	95	135	M20	34	25 X 14 X 125
6205	100	165	M20	34	28 X 16 X 165

Model	Motor		Without Brake					Appx Wt (kg)	With Brake							Appx Wt (kg)
	kW	Pole	C	O	AB	L	MP		C	O	AB	L	MP	MS	MT	
CHHM5-617□	3.7	4	680	403	147	127	212	146	752	403	170	199	212	132	157	156
CHHM8-617□	5.5	4	724	403	147	127	212	153	796	403	170	199	212	132	157	163
CHHM10-617□	7.5	4	742	403	188	143	251	168	837	403	188	238	251	170	182	186
CHHM15-617□	11	4	802	403	188	143	251	182	897	403	188	238	251	170	182	200
CHHM20-617□	15	4	882	413	232	295	324	236	972	413	232	385	324	220	-	269
CHHM25-617□	18.5	4	977	427	297	340	394	304	1187	427	297	550	394	367	-	355
CHHM30-617□	22	4	977	427	297	340	394	304	1187	427	297	550	394	367	-	355
CHHM40-617□	30	4	977	428	297	340	394	321	1187	427	297	550	394	370	-	364

Notes: [1] 0 or 5 replaces □ depending on the model selected for the application. Please refer to the Gearmotor Selection Procedure and Tables in this section.
[2] The shaft dimensions shown above are hard metric sizes with metric keys. Units are available with shafting made to either DIN/ISO or JIS tolerances. Please consult factory for availability.

Dimensions shown are for reference only and are subject to change without notice, unless certified.
Certified prints are available after receipt of an order; consult factory.

CHHM – 617□~6205[1] (con't.)

Metric (mm)

Model	Motor		Without Brake					Appx Wt (kg)	With Brake							Appx Wt (kg)
	kW	Pole	C	O	AB	L	MP		C	O	AB	L	MP	MS	MT	
CHHM5-618□	3.7	4	717	438	147	127	212	183	789	438	170	199	212	132	157	193
CHHM8-618□	5.5	4	761	438	147	127	212	191	833	438	170	199	212	132	157	201
CHHM10-618□	7.5	4	779	438	188	143	251	206	874	438	188	238	251	170	182	224
CHHM15-618□	11	4	839	438	188	143	251	220	934	438	188	238	251	170	182	238
CHHM20-618□	15	4	919	438	232	295	324	280	1009	438	232	385	324	220	-	308
CHHM25-618□	18.5	4	1014	448	297	340	394	342	1224	448	297	550	394	367	-	393
CHHM30-618□	22	4	1014	448	297	340	394	342	1224	448	297	550	394	367	-	393
CHHM40-618□	30	4	1014	448	297	340	394	359	1224	448	297	550	394	370	-	402
CHHM50-618□	37	4	1129	481	297	430	394	407	1344	481	297	645	394	445	-	504
CHHM60-618□	45	4	1129	481	297	430	394	407	1344	481	297	645	394	445	-	504
CHHM8-619□	5.5	4	857	511	147	127	212	265	929	511	170	199	212	132	157	275
CHHM10-619□	7.5	4	870	511	188	143	251	278	965	511	188	238	251	170	182	296
CHHM15-619□	11	4	930	511	188	143	251	292	1025	511	188	238	251	170	182	310
CHHM20-619□	15	4	995	467	232	295	324	345	1085	467	232	385	324	220	-	379
CHHM25-619□	18.5	4	1090	511	297	340	394	417	1300	511	297	550	394	367	-	462
CHHM256-619□	18.5	6	1090	511	297	340	394	432	1300	511	297	550	394	367	-	475
CHHM30-619□	22	4	1090	511	297	340	394	417	1300	511	297	550	394	367	-	462
CHHM40-619□	30	4	1090	511	297	340	394	432	1300	511	297	550	394	370	-	475
CHHM406-619□	30	6	1205	511	297	430	394	470	1420	511	297	645	394	445	-	567
CHHM50-619□	37	4	1205	511	297	430	394	470	1420	511	297	645	394	445	-	567
CHHM506-619□	37	6	1205	511	297	430	394	470	1420	511	297	645	394	445	-	567
CHHM60-619□	45	4	1205	511	297	430	394	470	1420	511	297	645	394	445	-	567
CHHM15-6205	11	4	972	530	188	143	251	313	1067	530	188	238	251	170	182	331
CHHM20-6205	15	4	1042	530	232	295	324	367	1132	530	232	385	324	220	-	402
CHHM206-6205	15	6	1127	530	297	340	394	438	1337	530	297	550	394	367	-	483
CHHM25-6205	18.5	4	1127	530	297	340	394	438	1337	530	297	550	394	367	-	483
CHHM30-6205	22	4	1127	530	297	340	394	438	1337	530	297	550	394	367	-	483
CHHM306-6205	22	6	1127	530	297	340	394	451	1337	530	297	550	394	370	-	496
CHHM40-6205	30	4	1127	530	297	340	394	451	1337	530	297	550	394	370	-	496
CHHM406-6205	30	6	1242	530	297	430	394	489	1457	530	297	645	394	445	-	583
CHHM50-6205	37	4	1242	530	297	430	394	489	1457	530	297	645	394	445	-	583
CHHM506-6205	37	6	1242	530	297	430	394	489	1457	530	297	645	394	445	-	583
CHHM60-6205	45	4	1242	530	297	430	394	489	1457	530	297	645	394	445	-	583
CHHM606-6205	45	6	1297	575	412	465	484	582	-	-	-	-	-	-	-	-
CHHM75-6205	55	4	1297	575	412	465	484	582	-	-	-	-	-	-	-	-

Note: [1] 0 or 5 replaces □ depending on the model selected for the application. Please refer to the Gearmotor Selection Procedure and Tables in this section.

INTEGRAL FOOT MOUNT
SINGLE REDUCTION

CHHM – 6215~6265

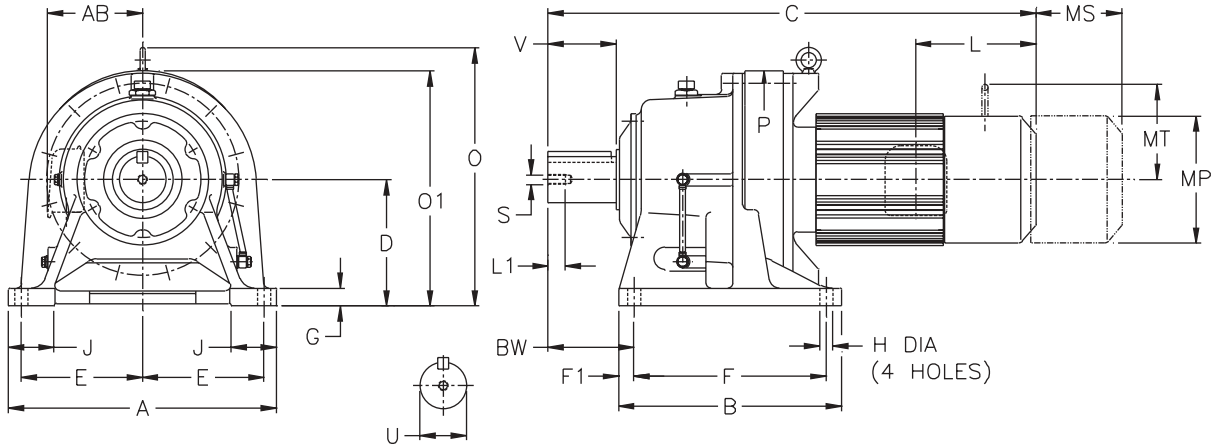

Inch (in)

Model CHHM	A	B	D	E	E1	F	F1	G	H	J	P	BW
6215Y	22.83	18.70	10.433	9.45	1.97	15.55	1.57	1.57	1.02	4.33	19.96	8.27
6225Y	24.41	20.47	11.024	10.63	1.57	16.54	1.97	1.57	1.30	4.53	21.61	9.06
6235Y	26.38	22.05	11.811	11.42	1.77	18.11	1.97	1.77	1.30	4.72	23.27	10.24
6245Y	28.35	22.83	13.189	12.40	1.77	18.90	1.97	1.77	1.54	5.04	25.08	10.35
6255Y	30.71	24.80	14.764	13.19	2.17	20.47	2.17	1.97	1.54	5.51	27.68	12.60
6265Y	34.65	27.56	15.748	15.16	2.17	23.23	2.17	2.17	1.77	6.30	30.39	15.35

Model CHHM	Low Speed Shaft				
	U*	V	S	L1	Key
6215Y	4.250	6.50	3/4-10UNC	1.34	1 X 1 X 6.50
6225Y	4.625	6.50	3/4-10UNC	1.34	1-1/4 X 7/8 X 6.5
6235Y	5.000	7.87	1-8UNC	1.61	1-1/4 X 7/8 X 7.87
6245Y	5.500	7.87	1-8UNC	1.61	1-1/4 X 7/8 X 7.87
6255Y	6.250	9.45	1-1/4-7UNC	1.93	1-1/2 X 1 X 9.45
6265Y	6.625	11.81	1-1/4-7UNC	1.93	1-3/4 X 1-1/4 X 11.8

*** Shaft Tolerances:**

Shaft Nominal Diameter (inches)	Tolerances (inches)
0.500 (1/2) through 0.625 (5/8)	+0.0000/-0.0004
0.750 (3/4) through 1.125 (1 1/8)	+0.0000/-0.0005
1.25 (1 1/4) through 1.875 (1 7/8)	+0.0000/-0.0006
2.000 (2) through 3.125 (3 1/8)	+0.0000/-0.0007
3.250 (3 1/4) through 4.625 (4 5/8)	+0.0000/-0.0009
4.750 (4 3/4) through 7.00 (7)	+0.0000/-0.0010

Model	Motor		Without Brake					Appx Wt (lb)	With Brake							Appx Wt (lb)
	HP	Pole	C	O	AB	L	MP		C	O	AB	L	MP	MS	MT	
CHHM15Y-6215Y	15	4	39.21	22.64	7.40	5.63	9.88	871	42.95	22.64	7.40	9.37	9.88	6.69	7.17	911
CHHM20-6215Y	20	4	41.97	22.64	9.13	11.61	12.76	992	45.51	22.64	9.13	15.16	12.76	8.66	-	1067
CHHM206-6215Y	20	6	45.31	22.64	11.69	13.39	15.51	1136	53.58	22.64	11.69	21.65	15.51	14.45	-	1235
CHHM25-6215Y	25	4	45.31	22.64	11.69	13.39	15.51	1136	53.58	22.64	11.69	21.65	15.51	14.45	-	1235
CHHM256-6215Y	25	6	45.31	22.64	11.69	13.39	15.51	1164	53.58	22.64	11.69	21.65	15.51	14.45	-	1263
CHHM30-6215Y	30	4	45.31	22.64	11.69	13.39	15.51	1136	53.58	22.64	11.69	21.65	15.51	14.45	-	1235
CHHM306-6215Y	30	6	45.31	22.64	11.69	13.39	15.51	1164	53.58	22.64	11.69	21.65	15.51	14.57	-	1263
CHHM40-6215Y	40	4	45.31	22.64	11.69	13.39	15.51	1164	53.58	22.64	11.69	21.65	15.51	14.57	-	1263
CHHM406-6215Y	40	6	49.84	22.64	11.69	16.93	15.51	1248	58.31	22.64	11.69	25.39	15.51	17.52	-	1458
CHHM50-6215Y	50	4	49.84	22.64	11.69	16.93	15.51	1248	58.31	22.64	11.69	25.39	15.51	17.52	-	1458
CHHM506-6215Y	50	6	49.84	22.64	11.69	16.93	15.51	1248	58.31	22.64	11.69	25.39	15.51	17.52	-	1458
CHHM60-6215Y	60	4	49.84	22.64	11.69	16.93	15.51	1248	58.31	22.64	11.69	25.39	15.51	17.52	-	1458
CHHM606-6215Y	60	6	52.01	22.64	16.22	18.31	19.06	1491	-	-	-	-	-	-	-	-
CHHM75-6215Y	75	4	52.01	22.64	16.22	18.31	19.06	1491	-	-	-	-	-	-	-	-1910

Dimensions shown are for reference only and are subject to change without notice, unless certified.
Certified prints are available after receipt of an order; consult factory.

CHHM – 6215~6265 (con't.)

Inch (in)

Model	Motor		Without Brake					Appx Wt (lb)	With Brake							Appx Wt (lb)
	HP	Pole	C	O	AB	L	MP		C	O	AB	L	MP	MS	MT	
CHHM206-6225Y	20	6	46.89	24.02	11.69	13.39	15.51	1323	55.16	24.02	11.69	21.65	15.51	14.45	-	1422
CHHM25Y-6225Y	25	4	46.89	24.02	11.69	13.39	15.51	1323	55.16	24.02	11.69	21.65	15.51	14.45	-	1422
CHHM25Y6-6225Y	25	6	46.89	24.02	11.69	13.39	15.51	1352	55.16	24.02	11.69	21.65	15.51	14.45	-	1451
CHHM30-6225Y	30	4	46.89	24.02	11.69	13.39	15.51	1323	55.16	24.02	11.69	21.65	15.51	14.45	-	1422
CHHM306-6225Y	30	6	46.89	24.02	11.69	13.39	15.51	1352	55.16	24.02	11.69	21.65	15.51	14.57	-	1451
CHHM40-6225Y	40	4	46.89	24.02	11.69	13.39	15.51	1352	55.16	24.02	11.69	21.65	15.51	14.57	-	1451
CHHM406-6225Y	40	6	51.42	24.02	11.69	16.93	15.51	1435	59.88	24.02	11.69	25.39	15.51	17.52	-	1645
CHHM50-6225Y	50	4	51.42	24.02	11.69	16.93	15.51	1435	59.88	24.02	11.69	25.39	15.51	17.52	-	1645
CHHM506-6225Y	50	6	51.42	24.02	11.69	16.93	15.51	1435	59.88	24.02	11.69	25.39	15.51	17.52	-	1645
CHHM60-6225Y	60	4	51.42	24.02	11.69	16.93	15.51	1435	59.88	24.02	11.69	25.39	15.51	17.52	-	1645
CHHM606-6225Y	60	6	53.58	24.02	16.22	18.31	19.06	1654	-	-	-	-	-	-	-	-
CHHM75-6225Y	75	4	53.58	24.02	16.22	18.31	19.06	1654	-	-	-	-	-	-	-	-
CHHM206-6235Y	20	6	49.33	26.26	11.69	13.39	15.51	1539	57.60	26.26	11.69	21.65	15.51	14.45	-	1607
CHHM256-6235Y	25	6	49.33	26.26	11.69	13.39	15.51	1539	57.60	26.26	11.69	21.65	15.51	14.45	-	1638
CHHM306-6235Y	30	6	49.33	26.26	11.69	13.39	15.51	1539	57.60	26.26	11.69	21.65	15.51	14.57	-	1638
CHHM406-6235Y	40	6	53.86	26.26	11.69	16.93	15.51	1641	62.32	26.26	11.69	25.39	15.51	17.52	-	1835
CHHM506-6235Y	50	6	53.86	26.26	11.69	16.93	15.51	1641	62.32	26.26	11.69	25.39	15.51	17.52	-	1835
CHHM606-6235Y	60	6	56.02	26.26	16.22	18.31	19.06	1837	-	-	-	-	-	-	-	-
CHHM756-6235Y	75	6	59.17	26.26	16.22	19.88	19.09	1956	-	-	-	-	-	-	-	-
CHHM206-6245Y	20	6	50.47	28.70	11.69	13.39	15.51	1806	58.74	28.70	11.69	21.65	15.51	14.45	-	1879
CHHM256-6245Y	25	6	50.47	28.70	11.69	13.39	15.51	1806	58.74	28.70	11.69	21.65	15.51	14.45	-	1910
CHHM306-6245Y	30	6	50.47	28.70	11.69	13.39	15.51	1806	58.74	28.70	11.69	21.65	15.51	14.57	-	1910
CHHM406-6245Y	40	6	55.00	28.70	11.69	16.93	15.51	1907	63.46	28.70	11.69	25.39	15.51	17.52	-	2101
CHHM506-6245Y	50	6	55.00	28.70	11.69	16.93	15.51	1907	63.46	28.70	11.69	25.39	15.51	17.52	-	2101
CHHM606-6245Y	60	6	57.17	28.70	16.22	18.31	19.06	2108	-	-	-	-	-	-	-	-
CHHM756-6245Y	75	6	60.31	28.70	16.22	19.88	19.09	2216	-	-	-	-	-	-	-	-
CHHM256-6255Y	25	6	55.12	32.09	11.69	13.39	15.51	2536	63.39	32.09	11.69	21.65	15.51	14.45	-	2639
CHHM306-6255Y	30	6	55.12	32.09	11.69	13.39	15.51	2536	63.39	32.09	11.69	21.65	15.51	14.57	-	2639
CHHM406-6255Y	40	6	59.65	32.09	11.69	16.93	15.51	2635	68.11	32.09	11.69	25.39	15.51	17.52	-	2829
CHHM506-6255Y	50	6	59.65	32.09	11.69	16.93	15.51	2635	68.11	32.09	11.69	25.39	15.51	17.52	-	2829
CHHM606-6255Y	60	6	61.81	32.09	16.22	18.31	19.06	2811	-	-	-	-	-	-	-	-
CHHM756-6255Y	75	6	64.96	32.09	16.22	19.88	19.09	2933	-	-	-	-	-	-	-	-
CHHM406-6265Y	40	6	64.25	34.41	11.69	16.93	15.51	3175	72.72	34.41	11.69	25.39	15.51	17.52	-	3369
CHHM506-6265Y	50	6	64.25	34.41	11.69	16.93	15.51	3175	72.72	34.41	11.69	25.39	15.51	17.52	-	3369
CHHM606-6265Y	60	6	66.42	34.41	16.22	18.31	19.06	3385	-	-	-	-	-	-	-	-

Dimensions shown are for reference only and are subject to change without notice, unless certified.
Certified prints are available after receipt of an order; consult factory.

INTEGRAL FOOT MOUNT
SINGLE REDUCTION

CHHM – 6215~6265 (con't.)

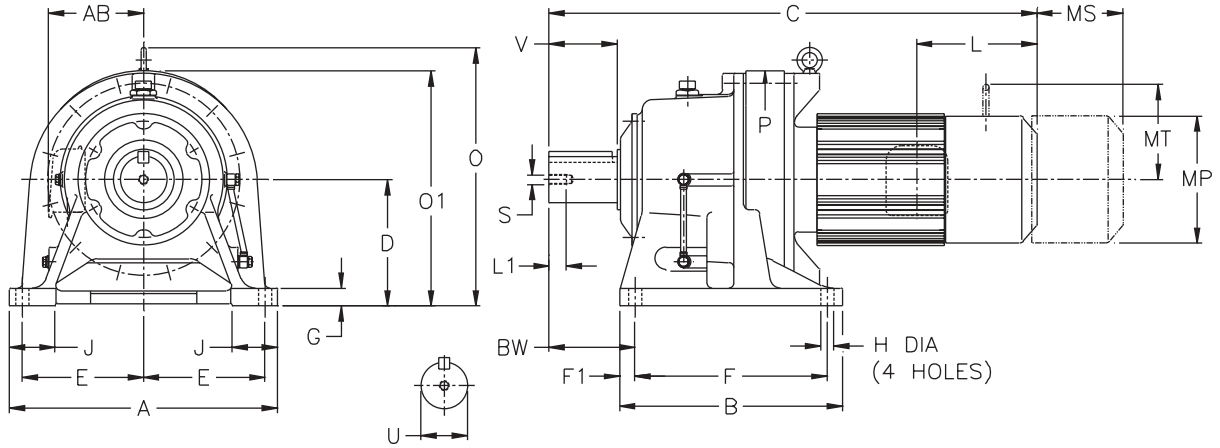

Metric (mm)[1]

Model CHHM	A	B	D	E	E1	F	F1	G	H	J	P	BW
6215	580	475	265	240	50	395	40	40	26	110	507	210
6225	620	520	280	270	40	420	50	40	33	115	549	230
6235	670	560	300	290	45	460	50	45	33	120	591	260
6245	720	580	335	315	45	480	50	45	39	128	637	263
6255	780	630	375	335	55	520	55	50	39	140	703	320
6265	880	700	400	385	55	590	55	55	45	160	772	390

Model CHHM	Low Speed Shaft				
	U h6	V	S	L1	Key
6215	110	165	M20	34	28 X 16 X 165
6225	120	165	M20	34	32 X 18 X 165
6235	130	200	M24	41	32 X 18 X 200
6245	140	200	M24	41	36 X 20 X 200
6255	160	240	M30	49	40 X 22 X 240
6265	170	300	M30	49	40 X 22 X 300

Model	Motor		Without Brake					Appx Wt (kg)	With Brake							Appx Wt (kg)
	kW	Pole	C	O	AB	L	MP		C	O	AB	L	MP	MS	MT	
CHHM15Y-6215	11	4	996	575	188	143	251	395	1091	575	188	238	251	170	182	413
CHHM20-6215	15	4	1066	575	232	295	324	450	1156	575	232	385	324	220	-	484
CHHM206-6215	15	6	1151	575	297	340	394	515	1361	575	297	550	394	367	-	560
CHHM25-6215	18.5	4	1151	575	297	340	394	515	1361	575	297	550	394	367	-	560
CHHM256-6215	18.5	6	1151	575	297	340	394	528	1361	575	297	550	394	367	-	573
CHHM30-6215	22	4	1151	575	297	340	394	515	1361	575	297	550	394	367	-	560
CHHM306-6215	22	6	1151	575	297	340	394	528	1361	575	297	550	394	370	-	573
CHHM40-6215	30	4	1151	575	297	340	394	528	1361	575	297	550	394	370	-	573
CHHM406-6215	30	6	1266	575	297	430	394	566	1481	575	297	645	394	445	-	661
CHHM50-6215	37	4	1266	575	297	430	394	566	1481	575	297	645	394	445	-	661
CHHM506-6215	37	6	1266	575	297	430	394	566	1481	575	297	645	394	445	-	661
CHHM60-6215	45	4	1266	575	297	430	394	566	1481	575	297	645	394	445	-	661
CHHM606-6215	45	6	1321	575	412	465	484	676	-	-	-	-	-	-	-	-
CHHM75-6215	55	4	1321	575	412	465	484	676	-	-	-	-	-	-	-	-

Note: [1] The shaft dimensions shown above are hard metric sizes with metric keys. Units are available with shafting made to either DIN/ISO or JIS tolerances. Please consult factory for availability.

Dimensions shown are for reference only and are subject to change without notice, unless certified. Certified prints are available after receipt of an order; consult factory.

CHHM – 6215~6265 (con't.)

Metric (mm)

Model	Motor		Without Brake					Appx Wt (kg)	With Brake							Appx Wt (kg)
	kW	Pole	C	O	AB	L	MP		C	O	AB	L	MP	MS	MT	
CHHM206-6225	15	6	1191	610	297	340	394	600	1401	610	297	550	394	367	-	645
CHHM25-6225	18.5	4	1191	610	297	340	394	600	1401	610	297	550	394	367	-	645
CHHM256-6225	18.5	6	1191	610	297	340	394	613	1401	610	297	550	394	367	-	658
CHHM30-6225	22	4	1191	610	297	340	394	600	1401	610	297	550	394	367	-	645
CHHM306-6225	22	6	1191	610	297	340	394	613	1401	610	297	550	394	370	-	658
CHHM40-6225	30	4	1191	610	297	340	394	613	1401	610	297	550	394	370	-	658
CHHM406-6225	30	6	1306	610	297	430	394	651	1521	610	297	645	394	445	-	746
CHHM50-6225	37	4	1306	610	297	430	394	651	1521	610	297	645	394	445	-	746
CHHM506-6225	37	6	1306	610	297	430	394	651	1521	610	297	645	394	445	-	746
CHHM60-6225	45	4	1306	610	297	430	394	651	1521	610	297	645	394	445	-	746
CHHM606-6225	45	6	1361	610	412	465	484	750	-	-	-	-	-	-	-	-
CHHM75-6225	55	4	1361	610	412	465	484	750	-	-	-	-	-	-	-	-
CHHM206-6235	15	6	1253	667	297	340	394	698	1463	667	297	550	394	367	-	729
CHHM256-6235	18.5	6	1253	667	297	340	394	698	1463	667	297	550	394	367	-	743
CHHM306-6235	22	6	1253	667	297	340	394	698	1463	667	297	550	394	370	-	743
CHHM406-6235	30	6	1368	667	297	430	394	744	1583	667	297	645	394	445	-	832
CHHM506-6235	37	6	1368	667	297	430	394	744	1583	667	297	645	394	445	-	832
CHHM606-6235	45	6	1423	667	412	465	484	833	-	-	-	-	-	-	-	-
CHHM756-6235	55	6	1503	667	412	505	485	887	-	-	-	-	-	-	-	-
CHHM206-6245	15	6	1282	729	297	340	394	819	1492	729	297	550	394	367	-	852
CHHM256-6245	18.5	6	1282	729	297	340	394	819	1492	729	297	550	394	367	-	866
CHHM306-6245	22	6	1282	729	297	340	394	819	1492	729	297	550	394	370	-	866
CHHM406-6245	30	6	1397	729	297	430	394	865	1612	729	297	645	394	445	-	953
CHHM506-6245	37	6	1397	729	297	430	394	865	1612	729	297	645	394	445	-	953
CHHM606-6245	45	6	1452	729	412	465	484	956	-	-	-	-	-	-	-	-
CHHM756-6245	55	6	1532	729	412	505	485	1005	-	-	-	-	-	-	-	-
CHHM256-6255	18.5	6	1400	815	297	340	394	1150	1610	815	297	550	394	367	-	1197
CHHM306-6255	22	6	1400	815	297	340	394	1150	1610	815	297	550	394	370	-	1197
CHHM406-6255	30	6	1515	815	297	430	394	1195	1730	815	297	645	394	445	-	1283
CHHM506-6255	37	6	1515	815	297	430	394	1195	1730	815	297	645	394	445	-	1283
CHHM606-6255	45	6	1570	815	412	465	484	1275	-	-	-	-	-	-	-	-
CHHM756-6255	55	6	1650	815	412	505	485	1330	-	-	-	-	-	-	-	-
CHHM406-6265	30	6	1632	874	297	430	394	1440	1847	874	297	645	394	445	-	1528
CHHM506-6265	37	6	1632	874	297	430	394	1440	1847	874	297	645	394	445	-	1528
CHHM606-6265	45	6	1687	874	412	465	484	1535	-	-	-	-	-	-	-	-

INTEGRAL FOOT MOUNT
DOUBLE REDUCTION

CNHM – 606□DA~612□DB[1]

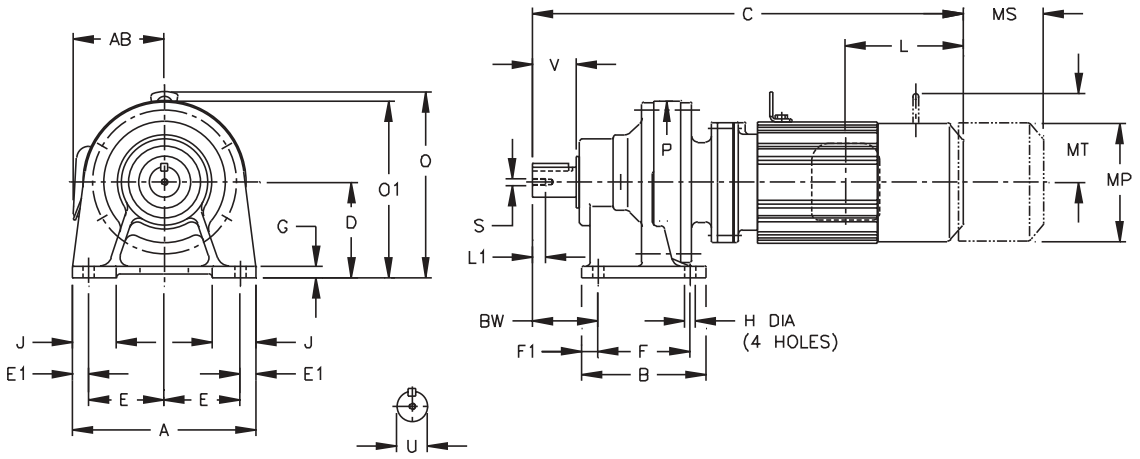

Inch (in)

Model CNHM	A	B	D	E	E1	F	F1	G	H	J	P	BW
606□DAY	5.67	3.31	3.150	2.36	0.47	2.36	0.47	0.39	0.35	1.38	4.33	1.61
607□DAY	5.67	3.31	3.150	2.36	0.47	2.36	0.47	0.39	0.35	1.38	4.33	1.85
609□DAY	7.09	5.31	3.937	2.95	0.59	3.54	0.59	0.47	0.43	1.57	5.91	2.36
610□DAY	7.09	5.31	3.937	2.95	0.59	3.54	0.59	0.47	0.43	1.57	5.91	2.36
612□DBY	9.06	6.10	4.724	3.74	0.79	4.53	0.79	0.59	0.55	2.17	8.03	3.23

Model CNHM	Low Speed Shaft				
	U*	V	L1	S	Key
606□DAY	0.500	0.98	0.63	10-32UNF	1/8 X 1/8 X .79
607□DAY	0.750	1.18	0.63	12-28UNF	3/16 X 3/16 X 1.06
609□DAY	1.125	1.38	0.79	5/16-18UNC	1/4 X 1/4 X 1.18
610□DAY	1.125	1.38	0.79	5/16-18UNC	1/4 X 1/4 X 1.18
612□DBY	1.500	2.17	0.79	5/16-18UNC	3/8 X 3/8 X 1.77

*** Shaft Tolerances:**

Shaft Nominal Diameter (inches)	Tolerances (inches)
0.500 (1/2) through 0.625 (5/8)	+0.0000/-0.0004
0.750 (3/4) through 1.125 (1 1/8)	+0.0000/-0.0005
1.25 (1 1/4) through 1.875 (1 7/8)	+0.0000/-0.0006

Model	Motor		Without Brake						Appx Wt (lb)	With Brake								Appx Wt (lb)
	HP	Pole	C	O	O1	AB	L	MP		C	O	O1	AB	L	MP	MS	MT	
CNHM01-606□DAY	1/8	4	10.20	-	5.51	3.35	1.38	4.69	18	11.57	-	5.43	3.50	2.76	4.88	1.93	-	20
CNHM01-607□DAY	1/8	4	10.43	-	5.51	3.35	1.38	4.69	18	11.81	-	5.43	3.50	2.76	4.88	1.93	-	20
CNHM02-607□DAY	1/4	4	12.09	-	5.51	3.35	2.32	4.88	20	13.35	-	5.43	3.50	3.58	4.88	2.40	-	22
CNHM01-609□DAY	1/8	4	12.76	8.15	-	3.35	1.38	4.69	35	14.13	8.15	-	3.50	2.76	4.88	1.93	-	37
CNHM02-609□DAY	1/4	4	14.41	8.15	-	3.35	2.32	4.88	37	15.67	8.15	-	3.50	3.58	4.88	2.40	-	40
CNHM03-609□DAY	1/3	4	14.41	8.15	-	3.35	2.32	4.88	37	15.67	8.15	-	3.50	3.58	4.88	2.40	-	40
CNHM05-609□DAY	1/2	4	15.20	8.15	-	3.35	2.32	4.88	40	16.46	8.15	-	3.50	3.58	4.88	2.40	-	42
CNHM01-610□DAY	1/8	4	13.31	8.15	-	3.35	1.38	4.69	40	14.69	8.15	-	3.50	2.76	4.88	1.93	-	42
CNHM02-610□DAY	1/4	4	14.96	8.15	-	3.35	2.32	4.88	42	16.22	8.15	-	3.50	3.58	4.88	2.40	-	44
CNHM03-610□DAY	1/3	4	14.96	8.15	-	3.35	2.32	4.88	42	16.22	8.15	-	3.50	3.58	4.88	2.40	-	44
CNHM05-610□DAY	1/2	4	15.75	8.15	-	3.35	2.32	4.88	44	17.01	8.15	-	3.50	3.58	4.88	2.40	-	46
CNHM01-612□DBY	1/8	4	15.20	10.12	-	3.35	1.38	4.69	71	16.57	10.12	-	3.50	2.76	4.88	1.93	-	75
CNHM03-612□DBY	1/3	4	16.85	10.12	-	3.35	2.32	4.88	73	18.62	10.12	-	3.50	3.58	4.88	2.40	-	77
CNHM05-612□DBY	1/2	4	17.64	10.12	-	3.35	2.32	4.88	75	18.62	10.12	-	3.50	3.58	4.88	2.40	-	79
CNHM08-612□DBY	3/4	4	19.25	10.12	-	4.49	3.82	5.83	84	20.94	10.12	-	5.59	5.51	5.83	3.66	4.17	90
CNHM1-612□DBY	1	4	19.25	10.12	-	4.49	3.82	5.83	84	20.94	10.12	-	5.59	5.51	5.83	3.66	4.17	90
CNHM1H-612□DBY	1.5	4	20.31	10.12	-	4.69	3.94	6.30	90	22.76	10.12	-	5.79	6.38	6.30	4.53	4.49	101
CNHM2-612□DBY	2	4	20.31	10.12	-	4.69	3.94	6.30	90	22.76	10.12	-	5.79	6.38	6.30	4.53	4.49	101

Note: [1] 0 or 5 replaces □ depending on the model selected for the application. Please refer to the Gearmotor Selection Procedure and Tables in this section.

Dimensions shown are for reference only and are subject to change without notice, unless certified.
Certified prints are available after receipt of an order; consult factory.

CNHM – 606□DA~612□DB[1] (con't.)

Metric (mm)[2]

Model CNHM	A	B	D	E	E1	F	F1	G	H	J	P	BW
606□DA	144	84	80	60	12	60	12	10	9	35	110	41
607□DA	144	84	80	60	12	60	12	10	9	35	110	47
609□DA	180	135	100	75	15	90	15	12	11	40	150	60
610□DA	180	135	100	75	15	90	15	12	11	40	150	60
612□DB	230	155	120	95	20	115	20	15	14	55	204	82

Model CNHM	Low Speed Shaft				
	U h6	V	S	L1	Key
606□DA	14	25	M5	16	5 X 5 X 20
607□DA	18	30	M6	16	6 X 6 X 25
609□DA	28	35	M8	20	8 X 7 X 32
610□DA	28	35	M8	20	8 X 7 X 32
612□DB	38	55	M8	20	10 X 8 X 50

Model	Motor		Without Brake						Appx Wt (kg)	With Brake								Appx Wt (kg)
	kW	Pole	C	O	O1	AB	L	MP		C	O	O1	AB	L	MP	MS	MT	
CNHM01-606□DA	0.1	4	259	-	140	85	35	119	8	294	-	138	89	70	124	49	-	9
CNHM01-607□DA	0.1	4	265	-	140	85	35	119	8	300	-	138	89	70	124	49	-	9
CNHM02-607□DA	0.2	4	307	-	140	85	59	124	9	339	-	138	89	91	124	61	-	10
CNHM01-609□DA	0.1	4	324	207	-	85	35	119	16	359	207	-	89	70	124	49	-	17
CNHM02-609□DA	0.2	4	366	207	-	85	59	124	17	398	207	-	89	91	124	61	-	18
CNHM03-609□DA	0.25	4	366	207	-	85	59	124	17	398	207	-	89	91	124	61	-	18
CNHM05-609□DA	0.4	4	386	207	-	85	59	124	18	418	207	-	89	91	124	61	-	19
CNHM01-610□DA	0.1	4	338	207	-	85	35	119	18	373	207	-	89	70	124	49	-	19
CNHM02-610□DA	0.2	4	380	207	-	85	59	124	19	412	207	-	89	91	124	61	-	20
CNHM03-610□DA	0.25	4	380	207	-	85	59	124	19	412	207	-	89	91	124	61	-	20
CNHM05-610□DA	0.4	4	400	207	-	85	59	124	20	432	207	-	89	91	124	61	-	21
CNHM01-612□DB	0.1	4	386	257	-	85	35	119	32	421	257	-	89	70	124	49	-	34
CNHM03-612□DB	0.25	4	428	257	-	85	59	124	33	473	257	-	89	91	124	61	-	35
CNHM05-612□DB	0.4	4	448	257	-	85	59	124	34	473	257	-	89	91	124	61	-	36
CNHM08-612□DB	0.55	4	489	257	-	114	97	148	38	532	257	-	142	140	148	93	106	41
CNHM1-612□DB	0.75	4	489	257	-	114	97	148	38	532	257	-	142	140	148	93	106	41
CNHM1H-612□DB	1.1	4	516	257	-	119	100	160	41	578	257	-	147	162	160	115	114	46
CNHM2-612□DB	1.5	4	516	257	-	119	100	160	41	578	257	-	147	162	160	115	114	46

Notes: [1] 0 or 5 replaces □ depending on the model selected for the application. Please refer to the Gearmotor Selection Procedure and Tables in this section.
[2] The shaft dimensions shown above are hard metric sizes with metric keys. Units are available with shafting made to either DIN/ISO or JIS tolerances. Please consult factory for availability.

INTEGRAL FOOT MOUNT
DOUBLE REDUCTION

CHHM – 613□DC~619□DB[1]

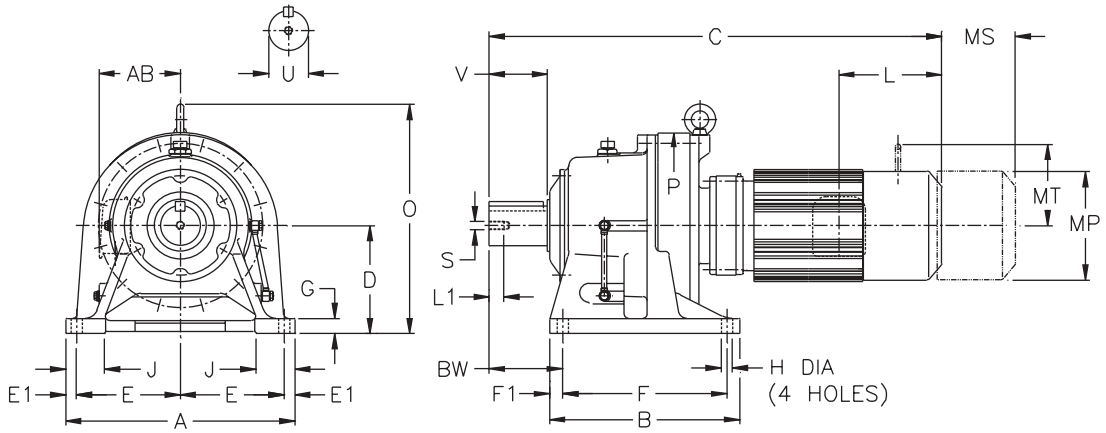

Inch (in)

Model CHHM	A	B	D	E	E1	F	F1	G	H	J	P	BW
613□DCY	12.99	7.68	5.906	5.71	0.79	5.71	0.98	0.87	0.71	2.56	9.06	3.94
614□DBY	12.99	7.68	5.906	5.71	0.79	5.71	0.98	0.87	0.71	2.56	9.06	4.72
616□DCY	16.14	9.37	6.299	7.28	0.79	5.91	1.73	0.98	0.71	2.95	11.81	5.47
617□DCY	16.93	13.19	7.874	7.48	0.98	10.83	1.18	1.18	0.87	3.15	13.39	4.92
618□DBY	18.50	14.96	8.661	8.27	0.98	12.60	1.18	1.18	0.87	3.35	14.57	5.71
619□DAY	20.87	17.32	9.843	9.45	0.98	14.96	1.18	1.38	1.02	3.54	16.93	6.69
619□DBY	20.87	17.32	9.843	9.45	0.98	14.96	1.18	1.38	1.02	3.54	16.93	6.69

Model CHHM	Low Speed Shaft				
	U*	V	S	L1	Key
613□DCY	1.875	2.76	3/8-16UNC	0.71	1/2 X 1/2 X 2.16
614□DBY	1.875	3.54	3/8-16UNC	0.71	1/2 X 1/2 X 2.95
616□DCY	2.250	3.54	3/8-16UNC	0.71	1/2 X 1/2 X 2.95
617□DCY	2.750	3.54	1/2-13UNC	0.94	5/8 X 5/8 X 3.15
618□DBY	3.125	4.33	1/2-13UNC	0.94	3/4 X 3/4 X 3.74
619□DAY	3.625	5.31	3/4-10UNC	1.34	7/8 X 7/8 X 4.92
619□DBY	3.625	5.31	3/4-10UNC	1.34	7/8 X 7/8 X 4.92

*** Shaft Tolerances:**

Shaft Nominal Diameter (inches)	Tolerances (inches)
0.500 (1/2) through 0.625 (5/8)	+0.0000/-0.0004
0.750 (3/4) through 1.125 (1 1/8)	+0.0000/-0.0005
1.25 (1 1/4) through 1.875 (1 7/8)	+0.0000/-0.0006
2.000 (2) through 3.125 (3 1/8)	+0.0000/-0.0007
3.250 (3 1/4) through 4.625 (4 5/8)	+0.0000/-0.0009
4.750 (4 3/4) through 7.00 (7)	+0.0000/-0.0010

Model	Motor		Without Brake					Appx Wt (lb)	With Brake							Appx Wt (lb)
	HP	Pole	C	O	AB	L	MP		C	O	AB	L	MP	MS	MT	
CHHM02-613□DCY	1/4	4	19.41	11.81	3.35	2.32	4.88	110	20.67	11.81	3.50	3.58	4.88	2.40	-	115
CHHM03-613□DCY	1/3	4	19.41	11.81	3.35	2.32	4.88	110	20.67	11.81	3.50	3.58	4.88	2.40	-	115
CHHM05-613□DCY	1/2	4	20.20	11.81	3.35	2.32	4.88	112	21.46	11.81	3.50	3.58	4.88	2.40	-	117
CHHM08-613□DCY	3/4	4	21.81	10.35	4.49	3.82	5.83	121	23.50	10.35	5.59	5.51	5.83	3.66	4.17	128
CHHM1-613□DCY	1	4	21.81	10.35	4.49	3.82	5.83	121	23.50	10.35	5.59	5.51	5.83	3.66	4.17	128
CHHM1H-613□DCY	1.5	4	23.11	10.63	4.69	3.94	6.30	130	25.55	10.63	5.79	6.38	6.30	4.53	4.49	141
CHHM2-613□DCY	2	4	23.11	10.63	4.69	3.94	6.30	130	25.55	10.63	5.79	6.38	6.30	4.53	4.49	141
CHHM3-613□DCY	3	4	23.90	10.87	4.96	4.13	6.81	139	26.38	10.87	6.06	6.61	6.81	4.76	4.88	152

Note: [1] 0 or 5 replaces □ depending on the model selected for the application. Please refer to the Gearmotor Selection Procedure and Tables in this section.

Dimensions shown are for reference only and are subject to change without notice, unless certified.
Certified prints are available after receipt of an order; consult factory.

CHHM – 613□DC~619□DB[1] (con't.)

Inch (in)

Model	Motor		Without Brake					Appx Wt (lb)	With Brake							Appx Wt (lb)
	HP	Pole	C	O	AB	L	MP		C	O	AB	L	MP	MS	MT	
CHHM01-614□DBY	1/8	4	17.99	11.81	3.35	1.38	4.69	104	19.37	11.81	3.50	2.76	4.88	1.93	-	108
CHHM02-614□DBY	1/4	4	19.65	11.81	3.35	2.32	4.88	106	20.91	11.81	3.50	3.58	4.88	2.40	-	110
CHHM03-614□DBY	1/3	4	19.65	11.81	3.35	2.32	4.88	106	20.91	11.81	3.50	3.58	4.88	2.40	-	110
CHHM05-614□DBY	1/2	4	20.43	11.81	3.35	2.32	4.88	108	21.69	11.81	3.50	3.58	4.88	2.40	-	112
CHHM08-614□DBY	3/4	4	22.05	10.35	4.49	3.82	5.83	117	23.74	10.35	5.59	5.51	5.83	3.66	4.17	123
CHHM1-614□DBY	1	4	22.05	10.35	4.49	3.82	5.83	117	23.74	10.35	5.59	5.51	5.83	3.66	4.17	123
CHHM1H-614□DBY	1.5	4	23.35	10.63	4.69	3.94	6.30	123	25.79	10.63	5.79	6.38	6.30	4.53	4.49	135
CHHM2-614□DBY	2	4	23.35	10.63	4.69	3.94	6.30	123	25.79	10.63	5.79	6.38	6.30	4.53	4.49	135
CHHM05-616□DCY	1/2	4	23.07	13.74	3.35	2.32	4.88	216	24.49	13.74	3.50	3.58	4.88	2.40	-	221
CHHM08-616□DCY	3/4	4	24.65	13.74	4.49	3.82	5.83	225	26.34	13.74	5.59	5.51	5.83	3.66	4.17	232
CHHM1-616□DCY	1	4	24.65	13.74	4.49	3.82	5.83	225	26.34	13.74	5.59	5.51	5.83	3.66	4.17	232
CHHM1H-616□DCY	1.5	4	25.94	13.74	4.69	3.94	6.30	234	28.39	13.74	5.79	6.38	6.30	4.53	4.49	245
CHHM2-616□DCY	2	4	25.94	13.74	4.69	3.94	6.30	234	28.39	13.74	5.79	6.38	6.30	4.53	4.49	245
CHHM3-616□DCY	3	4	26.73	13.74	4.96	4.13	6.81	243	29.21	13.74	6.06	6.61	6.81	4.76	4.88	258
CHHM5-616□DCY	5	4	27.64	13.74	5.79	5.00	8.35	265	30.47	13.74	6.69	7.83	8.35	5.20	6.18	287
CHHM8-616□DCY	7.5	4	29.37	13.74	5.79	5.00	8.35	280	32.20	13.74	6.69	7.83	8.35	5.20	6.18	302
CHHM05-617□DCY	1/2	4	24.92	16.38	3.35	2.32	4.88	291	26.34	16.38	3.50	3.58	4.88	2.40	-	295
CHHM08-617□DCY	3/4	4	26.50	16.38	4.49	3.82	5.83	300	28.19	16.38	5.59	5.51	5.83	3.66	4.17	306
CHHM1-617□DCY	1	4	26.50	16.38	4.49	3.82	5.83	300	28.19	16.38	5.59	5.51	5.83	3.66	4.17	306
CHHM1H-617□DCY	1.5	4	27.80	16.38	4.69	3.94	6.30	309	30.24	16.38	5.79	6.38	6.30	4.53	4.49	320
CHHM2-617□DCY	2	4	27.80	16.38	4.69	3.94	6.30	309	30.24	16.38	5.79	6.38	6.30	4.53	4.49	320
CHHM3-617□DCY	3	4	28.58	16.38	4.96	4.13	6.81	318	31.06	16.38	6.06	6.61	6.81	4.76	4.88	333
CHHM5-617□DCY	5	4	29.49	16.38	5.79	5.00	8.35	340	32.32	16.38	6.69	7.83	8.35	5.20	6.18	362
CHHM8-617□DCY	7.5	4	31.22	16.38	5.79	5.00	8.35	355	34.06	16.38	6.69	7.83	8.35	5.20	6.18	377
CHHM1-618□DBY	1	4	28.86	17.76	4.49	3.82	5.83	417	30.55	17.76	5.59	5.51	5.83	3.66	4.17	423
CHHM1H-618□DBY	1.5	4	30.16	17.76	4.69	3.94	6.30	426	32.60	17.76	5.79	6.38	6.30	4.53	4.49	437
CHHM2-618□DBY	2	4	30.16	17.76	4.69	3.94	6.30	426	32.60	17.76	5.79	6.38	6.30	4.53	4.49	437
CHHM3-618□DBY	3	4	30.94	17.76	4.96	4.13	6.81	432	33.43	17.76	6.06	6.61	6.81	4.76	4.88	448
CHHM5-618□DBY	5	4	31.85	17.76	5.79	5.00	8.35	454	34.69	17.76	6.69	7.83	8.35	5.20	6.18	476
CHHM8-618□DBY	7.5	4	33.58	17.76	5.79	5.00	8.35	470	36.42	17.76	6.69	7.83	8.35	5.20	6.18	492
CHHM10-618□DBY	10	4	34.49	17.76	7.40	5.63	9.88	503	38.23	17.76	7.40	9.37	9.88	6.69	7.17	542
CHHM15-618□DBY	15	4	36.85	17.76	7.40	5.63	9.88	534	40.59	17.76	7.40	9.37	9.88	6.69	7.17	573
CHHM1-619□DAY	1	4	31.22	20.91	4.49	3.82	5.83	549	32.91	20.91	5.59	5.51	5.83	3.66	4.17	556
CHHM1H-619□DAY	1.5	4	32.52	20.91	4.69	3.94	6.30	558	34.96	20.91	5.79	6.38	6.30	4.53	4.49	569
CHHM2-619□DAY	2	4	32.52	20.91	4.69	3.94	6.30	558	34.96	20.91	5.79	6.38	6.30	4.53	4.49	569
CHHM3-619□DAY	3	4	33.31	20.91	4.96	4.13	6.81	567	35.79	20.91	6.06	6.61	6.81	4.76	4.88	582
CHHM5-619□DAY	5	4	34.21	20.91	5.79	5.00	8.35	589	37.05	20.91	6.69	7.83	8.35	5.20	6.18	611
CHHM8-619□DAY	7.5	4	35.94	20.91	5.79	5.00	8.35	604	38.78	20.91	6.69	7.83	8.35	5.20	6.18	626
CHHM5-6195DBY	5	4	34.84	20.91	5.79	5.00	8.35	604	37.68	20.91	6.69	7.83	8.35	5.20	6.18	626
CHHM8-6195DBY	7.5	4	36.57	20.91	5.79	5.00	8.35	620	39.41	20.91	6.69	7.83	8.35	5.20	6.18	642
CHHM10-6195DBY	10	4	37.48	20.91	7.40	5.63	9.88	653	41.22	20.91	7.40	9.37	9.88	6.69	7.17	692
CHHM15-6195DBY	15	4	39.84	20.91	7.40	5.63	9.88	684	43.58	20.91	7.40	9.37	9.88	6.69	7.17	723
CHHM20-6195DBY	20	4	43.39	20.91	9.13	11.61	12.76	798	46.93	20.91	9.13	15.16	12.76	8.66	-	871

Note: [1] 0 or 5 replaces □ depending on the model selected for the application. Please refer to the Gearmotor Selection Procedure and Tables in this section.

Dimensions shown are for reference only and are subject to change without notice, unless certified.
Certified prints are available after receipt of an order; consult factory.

INTEGRAL FOOT MOUNT
DOUBLE REDUCTION

CHHM – 613□DC~619□DB[1]

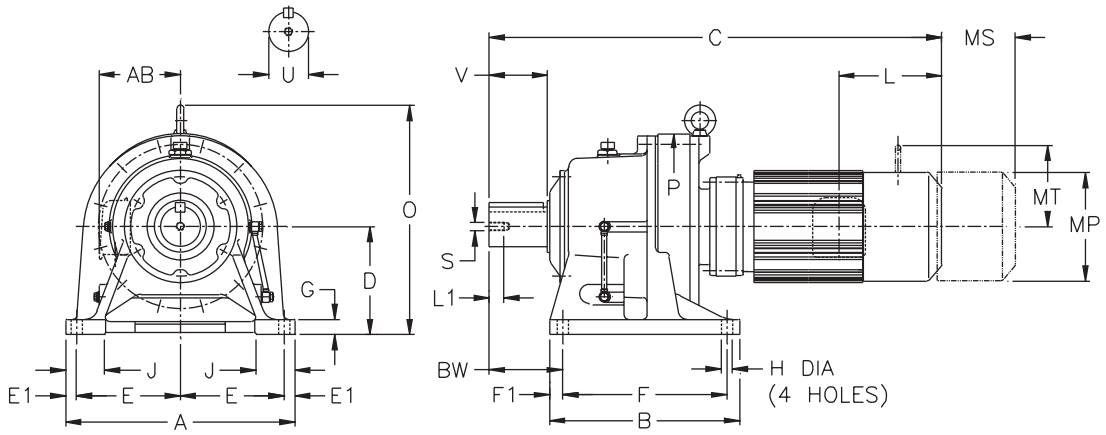

Metric (mm)[2]

Model CHHM	A	B	D	E	E1	F	F1	G	H	J	P	BW
613□DC	330	195	150	145	20	145	25	22	18	65	230	100
614□DB	330	195	150	145	20	145	25	22	18	65	230	120
616□DC	410	238	160	185	20	150	44	25	18	75	300	139
617□DC	430	335	200	190	25	275	30	30	22	80	340	125
618□DB	470	380	220	210	25	320	30	30	22	85	370	145
619□DA	530	440	250	240	25	380	30	35	26	90	430	170
619□DB	530	440	250	240	25	380	30	35	26	90	430	170

Model	Low Speed Shaft				
	U h6	V	S	L1	Key
613□DC	50	70	M10	18	14 X 9 X 56
614□DB	50	90	M10	18	14 X 9 X 80
616□DC	60	90	M10	18	18 X 11 X 80
617□DC	70	90	M12	24	20 X 12 X 80
618□DB	80	110	M12	24	22 X 14 X 100
619□DA	95	135	M20	34	25 X 14 X 125
619□DB	95	135	M20	34	25 X 14 X 125

Model	Motor		Without Brake					Appx Wt (kg)	With Brake							Appx Wt (kg)
	kW	Pole	C	O	AB	L	MP		C	O	AB	L	MP	MS	MT	
CHHM02-613□DC	0.2	4	493	300	85	59	124	50	525	300	89	91	124	61	-	52
CHHM03-613□DC	0.25	4	493	300	85	59	124	50	525	300	89	91	124	61	-	52
CHHM05-613□DC	0.4	4	513	300	85	59	124	51	545	300	89	91	124	61	-	53
CHHM08-613□DC	0.55	4	554	263	114	97	148	55	597	263	142	140	148	93	106	58
CHHM1-613□DC	0.75	4	554	263	114	97	148	55	597	263	142	140	148	93	106	58
CHHM1H-613□DC	1.1	4	587	270	119	100	160	59	649	270	147	162	160	115	114	64
CHHM2-613□DC	1.5	4	587	270	119	100	160	59	649	270	147	162	160	115	114	64
CHHM3-613□DC	2.2	4	607	276	126	105	173	63	670	276	154	168	173	121	124	69

Notes: [1] 0 or 5 replaces □ depending on the model selected for the application. Please refer to the Gearmotor Selection Procedure and Tables in this section.
[2] The shaft dimensions shown above are hard metric sizes with metric keys. Units are available with shafting made to either DIN/ISO or JIS tolerances. Please consult factory for availability.

Dimensions shown are for reference only and are subject to change without notice, unless certified.
Certified prints are available after receipt of an order; consult factory.

CHHM – 613□DC~619□DB[1] (con't.)

Metric (mm)

Model	Motor		Without Brake					Appx Wt (kg)	With Brake							Appx Wt (kg)
	kW	Pole	C	O	AB	L	MP		C	O	AB	L	MP	MS	MT	
CHHM01-614□DB	0.1	4	457	300	85	35	119	47	492	300	89	70	124	49	-	49
CHHM02-614□DB	0.2	4	499	300	85	59	124	48	531	300	89	91	124	61	-	50
CHHM03-614□DB	0.25	4	499	300	85	59	124	48	531	300	89	91	124	61	-	50
CHHM05-614□DB	0.4	4	519	300	85	59	124	49	551	300	89	91	124	61	-	51
CHHM08-614□DB	0.55	4	560	263	114	97	148	53	603	263	142	140	148	93	106	56
CHHM1-614□DB	0.75	4	560	263	114	97	148	53	603	263	142	140	148	93	106	56
CHHM1H-614□DB	1.1	4	593	270	119	100	160	56	655	270	147	162	160	115	114	61
CHHM2-614□DB	1.5	4	593	270	119	100	160	56	655	270	147	162	160	115	114	61
CHHM05-616□DC	0.4	4	586	349	85	59	124	98	622	349	89	91	124	61	-	100
CHHM08-616□DC	0.55	4	626	349	114	97	148	102	669	349	142	140	148	93	106	105
CHHM1-616□DC	075	4	626	349	114	97	148	102	669	349	142	140	148	93	106	105
CHHM1H-616□DC	1.1	4	659	349	119	100	160	106	721	349	147	162	160	115	114	111
CHHM2-616□DC	1.5	4	659	349	119	100	160	106	721	349	147	162	160	115	114	111
CHHM3-616□DC	2.2	4	679	349	126	105	173	110	742	349	154	168	173	121	124	117
CHHM5-616□DC	3.7	4	702	349	147	127	212	120	774	349	170	199	212	132	157	130
CHHM8-616□DC	5.5	4	746	349	147	127	212	127	818	349	170	199	212	132	157	137
CHHM05-617□DC	0.4	4	633	416	85	59	124	132	669	416	89	91	124	61	-	134
CHHM08-617□DC	0.55	4	673	416	114	97	148	136	716	416	142	140	148	93	106	139
CHHM1-617□DC	075	4	673	416	114	97	148	136	716	416	142	140	148	93	106	139
CHHM1H-617□DC	1.1	4	706	416	119	100	160	140	768	416	147	162	160	115	114	145
CHHM2-617□DC	1.5	4	706	416	119	100	160	140	768	416	147	162	160	115	114	145
CHHM3-617□DC	2.2	4	726	416	126	105	173	144	789	416	154	168	173	121	124	151
CHHM5-617□DC	3.7	4	749	416	147	127	212	154	821	416	170	199	212	132	157	164
CHHM8-617□DC	5.5	4	793	416	147	127	212	161	865	416	170	199	212	132	157	171
CHHM1-618□DB	075	4	733	451	114	97	148	189	776	451	142	140	148	93	106	192
CHHM1H-618□DB	1.1	4	766	451	119	100	160	193	828	451	147	162	160	115	114	198
CHHM2-618□DB	1.5	4	766	451	119	100	160	193	828	451	147	162	160	115	114	198
CHHM3-618□DB	2.2	4	786	451	126	105	173	196	849	451	154	168	173	121	124	203
CHHM5-618□DB	3.7	4	809	451	147	127	212	206	881	451	170	199	212	132	157	216
CHHM8-618□DB	5.5	4	853	451	147	127	212	213	925	451	170	199	212	132	157	223
CHHM10-618□DB	7.5	4	876	451	188	143	251	228	971	451	188	238	251	170	182	246
CHHM15-618□DB	11	4	936	451	188	143	251	242	1031	451	188	238	251	170	182	260
CHHM1-619□DA	0.75	4	793	531	114	97	148	249	836	531	142	140	148	93	106	252
CHHM1H-619□DA	1.1	4	826	531	119	100	160	253	888	531	147	162	160	115	114	258
CHHM2-619□DA	1.5	4	826	531	119	100	160	253	888	531	147	162	160	115	114	258
CHHM3-619□DA	2.2	4	846	531	126	105	173	257	909	531	154	168	173	121	124	264
CHHM5-619□DA	3.7	4	869	531	147	127	212	267	941	531	170	199	212	132	157	277
CHHM8-619□DA	5.5	4	913	531	147	127	212	274	985	531	170	199	212	132	157	284
CHHM5-619□DB	3.7	4	885	531	147	127	212	274	957	531	170	199	212	132	157	284
CHHM8-619□DB	5.5	4	929	531	147	127	212	281	1001	531	170	199	212	132	157	291
CHHM10-619□DB	7.5	4	952	531	188	143	251	296	1047	531	188	238	251	170	182	314
CHHM15-619□DB	11	4	1012	531	188	143	251	310	1107	531	188	238	251	170	182	328
CHHM20-619□DB	15	4	1102	531	232	295	324	362	1192	531	232	385	324	220	-	395

Note: [1] 0 or 5 replaces □ depending on the model selected for the application. Please refer to the Gearmotor Selection Procedure and Tables in this section.

Dimensions shown are for reference only and are subject to change without notice, unless certified.
Certified prints are available after receipt of an order; consult factory.

INTEGRAL FOOT MOUNT
DOUBLE REDUCTION

CHHM – 6205DA~6235DB

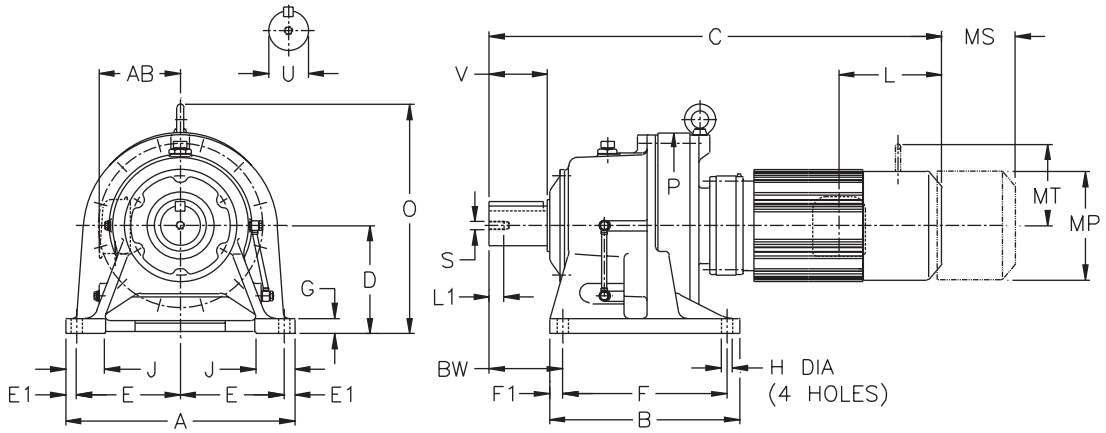

Inch (in)

Model CHHM	A	B	D	E	E1	F	F1	G	H	J	P	BW
6205DAY	20.87	17.32	9.843	8.66	1.77	14.17	1.57	1.38	1.02	3.94	17.64	8.46
6205DBY	20.87	17.32	9.843	8.66	1.77	14.17	1.57	1.38	1.02	3.94	17.64	8.46
6215DAY	22.83	18.70	10.433	9.45	1.97	15.55	1.57	1.57	1.02	4.33	19.09	8.27
6215DBY	22.83	18.70	10.433	9.45	1.97	15.55	1.57	1.57	1.02	4.33	19.09	8.27
6225DAY	24.41	20.47	11.024	10.63	1.57	16.54	1.97	1.57	1.30	4.53	20.71	9.06
6225DBY	24.41	20.47	11.024	10.63	1.57	16.54	1.97	1.57	1.30	4.53	20.71	9.06
6235DAY	26.38	22.05	11.811	11.42	1.77	18.11	1.97	1.77	1.30	4.72	22.13	10.24
6235DBY	26.38	22.05	11.811	11.42	1.77	18.11	1.97	1.77	1.30	4.72	22.13	10.24

Model CHHM	Low Speed Shaft				
	U*	V	S	L1	Key
6205DAY	3.875	6.50	3/4-10UNC	1.34	1 X 1 X 6.50
6205DBY	3.875	6.50	3/4-10UNC	1.34	1 X 1 X 6.50
6215DAY	4.250	6.50	3/4-10UNC	1.34	1 X 1 X 6.50
6215DBY	4.250	6.50	3/4-10UNC	1.34	1 X 1 X 6.50
6225DAY	4.625	6.50	3/4-10UNC	1.34	1-1/4 X 7/8 X 6.5
6225DBY	4.625	6.50	3/4-10UNC	1.34	1-1/4 X 7/8 X 6.5
6235DAY	5.000	7.87	1-8UNC	1.61	1-1/4 X 7/8 X 7.87
6235DBY	5.000	7.87	1-8UNC	1.61	1-1/4 X 7/8 X 7.87

*** Shaft Tolerances:**

Shaft Nominal Diameter (inches)	Tolerances (inches)
0.500 (1/2) through 0.625 (5/8)	+0.0000/-0.0004
0.750 (3/4) through 1.125 (1 1/8)	+0.0000/-0.0005
1.25 (1 1/4) through 1.875 (1 7/8)	+0.0000/-0.0006
2.000 (2) through 3.125 (3 1/8)	+0.0000/-0.0007
3.250 (3 1/4) through 4.625 (4 5/8)	+0.0000/-0.0009
4.750 (4 3/4) through 7.00 (7)	+0.0000/-0.0010

Model	Motor		Without Brake					Appx Wt (lb)	With Brake							Appx Wt (lb)
	HP	Pole	C	O	AB	L	MP		C	O	AB	L	MP	MS	MT	
CHHM1-6205DAY	1	4	32.83	20.87	4.49	3.82	5.83	591	34.53	20.87	5.59	5.51	5.83	3.66	4.17	598
CHHM2-6205DAY	2	4	34.13	20.87	4.69	3.94	6.30	600	36.57	20.87	5.79	6.38	6.30	4.53	4.49	611
CHHM3-6205DAY	3	4	34.92	20.87	4.96	4.13	6.81	609	37.36	20.87	6.06	6.61	6.81	4.76	4.88	624
CHHM5-6205DAY	5	4	35.83	20.87	5.79	5.00	8.35	631	38.66	20.87	6.69	7.83	8.35	5.20	6.18	653
CHHM8-6205DAY	7.5	4	37.56	20.87	5.79	5.00	8.35	646	40.39	20.87	6.69	7.83	8.35	5.20	6.18	668
CHHM3-6205DBY	3	4	35.98	20.87	4.96	4.13	6.81	635	38.46	20.87	6.06	6.61	6.81	4.76	4.88	650
CHHM5-6205DBY	5	4	36.89	20.87	5.79	5.00	8.35	657	39.72	20.87	6.69	7.83	8.35	5.20	6.18	679
CHHM8-6205DBY	7.5	4	38.62	20.87	5.79	5.00	8.35	673	41.46	20.87	6.69	7.83	8.35	5.20	6.18	695
CHHM10-6205DBY	10	4	39.53	20.87	7.40	5.63	9.88	706	43.27	20.87	7.40	9.37	9.88	6.69	7.17	745
CHHM15-6205DBY	15	4	41.89	20.87	7.40	5.63	9.88	734	45.63	20.87	7.40	9.37	9.88	6.69	7.17	774
CHHM20-6205DBY	20	4	45.43	20.87	9.13	11.61	12.76	849	48.58	20.87	9.13	15.16	12.76	8.66	-	919

Dimensions shown are for reference only and are subject to change without notice, unless certified.
Certified prints are available after receipt of an order; consult factory.

CHHM – 6205DA~6235DB (con't.)

Inch (in)

Model	Motor		Without Brake					Appx Wt (lb)	With Brake							Appx Wt (lb)
	HP	Pole	C	O	AB	L	MP		C	O	AB	L	MP	MS	MT	
CHHM2-6215DAY	2	4	36.22	22.64	4.69	3.94	6.30	807	38.66	22.64	5.79	6.38	6.30	4.53	4.49	818
CHHM3-6215DAY	3	4	37.01	22.64	4.96	4.13	6.81	814	39.49	22.64	6.06	6.61	6.81	4.76	4.88	829
CHHM5-6215DAY	5	4	37.91	22.64	5.79	5.00	8.35	836	40.75	22.64	6.69	7.83	8.35	5.20	6.18	858
CHHM8-6215DAY	7.5	4	39.65	22.64	5.79	5.00	8.35	851	42.48	22.64	6.69	7.83	8.35	5.20	6.18	873
CHHM10-6215DAY	10	4	40.55	22.64	7.40	5.63	9.88	884	44.29	22.64	7.40	9.37	9.88	6.69	7.17	924
CHHM15-6215DAY	15	4	42.91	22.64	7.40	5.63	9.88	913	46.65	22.64	7.40	9.37	9.88	6.69	7.17	953
CHHM20-6215DAY	20	4	46.46	22.64	9.13	11.61	12.76	1028	50.00	22.64	9.13	15.16	12.76	8.66	-	1100
CHHM10-6215DBY	10	4	41.73	22.64	7.40	5.63	9.88	928	45.47	22.64	7.40	9.37	9.88	6.69	7.17	966
CHHM15-6215DBY	15	4	44.09	22.64	7.40	5.63	9.88	959	47.83	22.64	7.40	9.37	9.88	6.69	7.17	997
CHHM20-6215DBY	20	4	47.44	22.64	9.13	11.61	12.76	1076	50.98	22.64	9.13	15.16	12.76	8.66	-	1149
CHHM25-6215DBY	25	4	51.18	22.64	11.69	13.39	15.51	1233	59.45	22.64	11.69	21.65	15.51	14.45	-	1345
CHHM30-6215DBY	30	4	51.18	22.64	11.69	13.39	15.51	1233	59.45	22.64	11.69	21.65	15.51	14.45	-	1345
CHHM2-6225DAY	2	4	37.87	24.02	4.69	3.94	6.30	970	40.31	24.02	5.79	6.38	6.30	4.53	4.49	981
CHHM3-6225DAY	3	4	38.66	24.02	4.96	4.13	6.81	977	41.14	24.02	6.06	6.61	6.81	4.76	4.88	992
CHHM5-6225DAY	5	4	39.57	24.02	5.79	5.00	8.35	999	42.40	24.02	6.69	7.83	8.35	5.20	6.18	1021
CHHM8-6225DAY	7.5	4	41.30	24.02	5.79	5.00	8.35	1014	44.13	24.02	6.69	7.83	8.35	5.20	6.18	1036
CHHM10-6225DAY	10	4	42.20	24.02	7.40	5.63	9.88	1047	45.94	24.02	7.40	9.37	9.88	6.69	7.17	1087
CHHM15-6225DAY	15	4	44.57	24.02	7.40	5.63	9.88	1078	48.31	24.02	7.40	9.37	9.88	6.69	7.17	1118
CHHM20-6225DAY	20	4	48.11	24.02	9.13	11.61	12.76	1193	51.65	24.02	9.13	15.16	12.76	8.66	-	1266
CHHM10-6225DBY	10	4	44.29	24.02	7.40	5.63	9.88	1147	48.03	24.02	7.40	9.37	9.88	6.69	7.17	1186
CHHM15-6225DBY	15	4	46.65	24.02	7.40	5.63	9.88	1177	50.39	24.02	7.40	9.37	9.88	6.69	7.17	1217
CHHM20-6225DBY	20	4	49.80	24.02	9.13	11.61	12.76	1297	53.35	24.02	9.13	15.16	12.76	8.66	-	1369
CHHM25-6225DBY	25	4	53.54	24.02	11.69	13.39	15.51	1446	61.81	24.02	11.69	21.65	15.51	14.45	-	1559
CHHM30-6225DBY	30	4	53.54	24.02	11.69	13.39	15.51	1446	61.81	24.02	11.69	21.65	15.51	14.45	-	1559
CHHM40-6225DBY	40	4	53.54	24.02	11.69	13.39	15.51	1484	61.81	24.02	11.69	21.65	15.51	14.57	-	1596
CHHM3-6235DAY	3	4	42.05	26.26	4.96	4.13	6.81	1235	44.53	26.26	6.06	6.61	6.81	4.76	4.88	1248
CHHM5-6235DAY	5	4	42.95	26.26	5.79	5.00	8.35	1255	45.79	26.26	6.69	7.83	8.35	5.20	6.18	1277
CHHM8-6235DAY	7.5	4	44.69	26.26	5.79	5.00	8.35	1270	47.52	26.26	6.69	7.83	8.35	5.20	6.18	1292
CHHM10-6235DAY	10	4	45.79	26.26	7.40	5.63	9.88	1305	49.53	26.26	7.40	9.37	9.88	6.69	7.17	1343
CHHM15-6235DAY	15	4	48.15	26.26	7.40	5.63	9.88	1336	51.89	26.26	7.40	9.37	9.88	6.69	7.17	1374
CHHM20-6235DAY	20	4	51.50	26.26	9.13	11.61	12.76	1453	55.04	26.26	9.13	15.16	12.76	8.66	-	1526
CHHM25-6235DAY	25	4	55.24	26.26	11.69	13.39	15.51	1614	63.50	26.26	11.69	21.65	15.51	14.45	-	1727
CHHM30-6235DAY	30	4	55.24	26.26	11.69	13.39	15.51	1614	63.50	26.26	11.69	21.65	15.51	14.45	-	1727
CHHM40-6235DBY	40	4	56.10	26.26	11.69	13.39	15.51	1713	64.37	26.26	11.69	21.65	15.51	14.57	-	1808
CHHM50-6235DBY	50	4	60.63	26.26	11.69	16.93	15.51	1797	69.09	26.26	11.69	25.39	15.51	17.52	-	2011

INTEGRAL FOOT MOUNT
DOUBLE REDUCTION

CHHM – 6205DA~6235DB

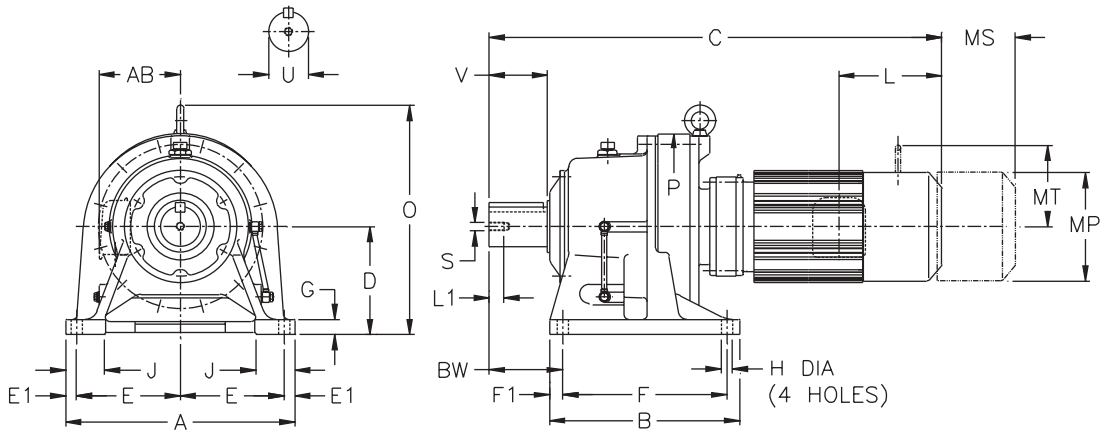

Metric (mm)[1]

Model CHHM	A	B	D	E	E1	F	F1	G	H	J	P	BW
6205DA	530	440	250	220	45	360	40	35	26	100	448	215
6205DB	530	440	250	220	45	360	40	35	26	100	448	215
6215DA	580	475	265	240	50	395	40	40	26	110	485	210
6215DB	580	475	265	240	50	395	40	40	26	110	485	210
6225DA	620	520	280	270	40	420	50	40	33	115	526	230
6225DB	620	520	280	270	40	420	50	40	33	115	526	230
6235DA	670	560	300	290	45	460	50	45	33	120	562	260
6235DB	670	560	300	290	45	460	50	45	33	120	562	260

Model CHHM	Low Speed Shaft				
	U h6	V	S	L1	Key
6205DA	100	165	M20	34	28 X 16 X 165
6205DB	100	165	M20	34	28 X 16 X 165
6215DA	110	165	M20	34	28 X 16 X 165
6215DB	110	165	M20	34	28 X 16 X 165
6225DA	120	165	M20	34	32 X 18 X 165
6225DB	120	165	M20	34	32 X 18 X 165
6235DA	130	200	M24	41	32 X 18 X 200
6235DB	130	200	M24	41	32 X 18 X 200

Model	Motor		Without Brake					Appx Wt (kg)	With Brake							Appx Wt (kg)
	kW	Pole	C	O	AB	L	MP		C	O	AB	L	MP	MS	MT	
CHHM1-6205DA	0.75	4	834	530	114	97	148	268	877	530	142	140	148	93	106	271
CHHM2-6205DA	1.5	4	867	530	119	100	160	272	929	530	147	162	160	115	114	277
CHHM3-6205DA	2.2	4	887	530	126	105	173	276	949	530	154	168	173	121	124	283
CHHM5-6205DA	3.7	4	910	530	147	127	212	286	982	530	170	199	212	132	157	296
CHHM8-6205DA	5.5	4	954	530	147	127	212	293	1026	530	170	199	212	132	157	303
CHHM3-6205DB	2.2	4	914	530	126	105	173	288	977	530	154	168	173	121	124	295
CHHM5-6205DB	3.7	4	937	530	147	127	212	298	1009	530	170	199	212	132	157	308
CHHM8-6205DB	5.5	4	981	530	147	127	212	305	1053	530	170	199	212	132	157	315
CHHM10-6205DB	7.5	4	1004	530	188	143	251	320	1099	530	188	238	251	170	182	338
CHHM15-6205DB	11	4	1064	530	188	143	251	333	1159	530	188	238	251	170	182	351
CHHM20-6205DB	15	4	1154	530	232	295	324	385	1234	530	232	385	324	220	-	417

Notes: [1] The shaft dimensions shown above are hard metric sizes with metric keys. Units are available with shafting made to either DIN/ISO or JIS tolerances. Please consult factory for availability.

Dimensions shown are for reference only and are subject to change without notice, unless certified.
Certified prints are available after receipt of an order; consult factory.

CHHM – 6205DA~6235DB (con't.)

Metric (mm)

Model	Motor		Without Brake					Appx Wt (kg)	With Brake							Appx Wt (kg)
	kW	Pole	C	O	AB	L	MP		C	O	AB	L	MP	MS	MT	
CHHM2-6215DA	1.5	4	920	575	119	100	160	366	982	575	147	162	160	115	114	371
CHHM3-6215DA	2.2	4	940	575	126	105	173	369	1003	575	154	168	173	121	124	376
CHHM5-6215DA	3.7	4	963	575	147	127	212	379	1035	575	170	199	212	132	157	389
CHHM8-6215DA	5.5	4	1007	575	147	127	212	386	1079	575	170	199	212	132	157	396
CHHM10-6215DA	7.5	4	1030	575	188	143	251	401	1125	575	188	238	251	170	182	419
CHHM15-6215DA	11	4	1090	575	188	143	251	414	1185	575	188	238	251	170	182	432
CHHM20-6215DA	15	4	1180	575	232	295	324	466	1270	575	232	385	324	220	-	499
CHHM10-6215DB	7.5	4	1060	575	188	143	251	421	1155	575	188	238	251	170	182	438
CHHM15-6215DB	11	4	1120	575	188	143	251	435	1215	575	188	238	251	170	182	452
CHHM20-6215DB	15	4	1205	575	232	295	324	488	1295	575	232	385	324	220	-	521
CHHM25-6215DB	18.5	4	1300	575	297	340	394	559	1510	575	297	550	394	367	-	610
CHHM30-6215DB	22	4	1300	575	297	340	394	559	1510	575	297	550	394	367	-	610
CHHM2-6225DA	1.5	4	962	610	119	100	160	440	1024	610	147	162	160	115	114	445
CHHM3-6225DA	2.2	4	982	610	126	105	173	443	1045	610	154	168	173	121	124	450
CHHM5-6225DA	3.7	4	1005	610	147	127	212	453	1077	610	170	199	212	132	157	463
CHHM8-6225DA	5.5	4	1049	610	147	127	212	460	1121	610	170	199	212	132	157	470
CHHM10-6225DA	7.5	4	1072	610	188	143	251	475	1167	610	188	238	251	170	182	493
CHHM15-6225DA	11	4	1132	610	188	143	251	489	1227	610	188	238	251	170	182	507
CHHM20-6225DA	15	4	1222	610	232	295	324	541	1312	610	232	385	324	220	-	-
CHHM10-6225DB	7.5	4	1125	610	188	143	251	520	1220	610	188	238	251	170	182	538
CHHM15-6225DB	11	4	1185	610	188	143	251	534	1280	610	188	238	251	170	182	552
CHHM20-6225DB	15	4	1265	610	232	295	324	588	1355	610	232	385	324	220	-	621
CHHM25-6225DB	18.5	4	1360	610	297	340	394	656	1570	610	297	550	394	367	-	707
CHHM30-6225DB	22	4	1360	610	297	340	394	656	1570	610	297	550	394	367	-	707
CHHM40-6225DB	30	4	1360	610	297	340	394	673	1570	610	297	550	394	370	-	724
CHHM3-6235DA	2.2	4	1068	667	126	105	173	560	1131	667	154	168	173	121	124	566
CHHM5-6235DA	3.7	4	1091	667	147	127	212	569	1163	667	170	199	212	132	157	579
CHHM8-6235DA	5.5	4	1135	667	147	127	212	576	1207	667	170	199	212	132	157	586
CHHM10-6235DA	7.5	4	1163	667	188	143	251	592	1258	667	188	238	251	170	182	609
CHHM15-6235DA	11	4	1223	667	188	143	251	606	1318	667	188	238	251	170	182	623
CHHM20-6235DA	15	4	1308	667	232	295	324	659	1398	667	232	385	324	220	-	692
CHHM25-6235DA	18.5	4	1403	667	297	340	394	732	1613	667	297	550	394	367	-	783
CHHM30-6235DA	22	4	1403	667	297	340	394	732	1613	667	297	550	394	367	-	783
CHHM40-6235DB	30	4	1425	667	297	340	394	777	1635	667	297	550	394	370	-	820
CHHM50-6235DB	37	4	1540	667	297	430	394	815	1755	667	297	645	394	445	-	912

Dimensions shown are for reference only and are subject to change without notice, unless certified.
Certified prints are available after receipt of an order; consult factory.

INTEGRAL FOOT MOUNT
DOUBLE REDUCTION

CHHM – 6245DA~6275DA

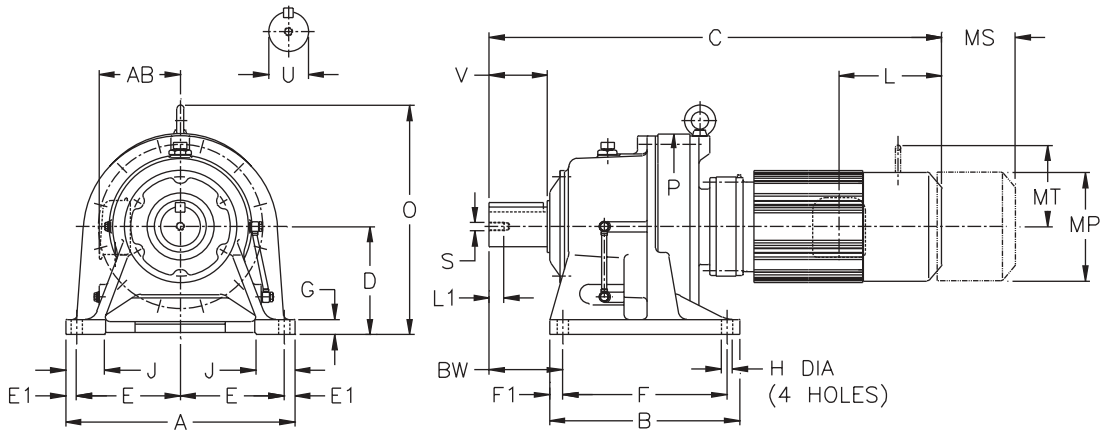

Inch (in)

Model CHHM	A	B	D	E	E1	F	F1	G	H	J	P	BW
6245DAY	28.35	22.83	13.189	12.40	1.77	18.90	1.97	1.77	1.54	5.04	24.17	10.35
6245DBY	28.35	22.83	13.189	12.40	1.77	18.90	1.97	1.77	1.54	5.04	24.17	10.35
6255DAY	30.71	24.80	14.764	13.19	2.17	20.47	2.17	1.97	1.54	5.51	26.38	12.60
6255DBY	30.71	24.80	14.764	13.19	2.17	20.47	2.17	1.97	1.54	5.51	26.38	12.60
6265DAY	34.65	27.56	15.748	15.16	2.17	23.23	2.17	2.17	1.77	6.30	28.98	15.35
6275DAY	45.67	40.94	21.260	20.67	2.17	16.54	3.94	2.36	1.77	7.87	37.40	19.09

Model CHHM	Low Speed Shaft				
	U*	V	S	L1	Key
6245DAY	5.500	7.87	1-8UNC	1.61	1-1/4 X 7/8 X 7.87
6245DBY	5.500	7.87	1-8UNC	1.61	1-1/4 X 7/8 X 7.87
6255DAY	6.250	9.45	1-1/4-7UNC	1.93	1-1/2 X 1 X 9.45
6255DBY	6.250	9.45	1-1/4-7UNC	1.93	1-1/2 X 1 X 9.45
6265DAY	6.625	11.81	1-1/4-7UNC	1.93	1-3/4 X 1-1/4 X 11.8
6275DAY	7.000	13.00	1-1/4-7UNC	2.05	1-3/4 X 1-1/4 X 13

*** Shaft Tolerances:**

Shaft Nominal Diameter (inches)	Tolerances (inches)
0.500 (1/2) through 0.625 (5/8)	+0.0000/-0.0004
0.750 (3/4) through 1.125 (1 1/8)	+0.0000/-0.0005
1.25 (1 1/4) through 1.875 (1 7/8)	+0.0000/-0.0006
2.000 (2) through 3.125 (3 1/8)	+0.0000/-0.0007
3.250 (3 1/4) through 4.625 (4 5/8)	+0.0000/-0.0009
4.750 (4 3/4) through 7.00 (7)	+0.0000/-0.0010

Model	Motor		Without Brake					Appx Wt (lb)	With Brake							Appx Wt (lb)
	HP	Pole	C	O	AB	L	MP		C	O	AB	L	MP	MS	MT	
CHHM3-6245DAY	3	4	43.54	28.70	4.96	4.13	6.81	1475	46.02	28.70	6.06	6.61	6.81	4.76	4.88	1488
CHHM5-6245DAY	5	4	44.45	28.70	5.79	5.00	8.35	1495	47.28	28.70	6.69	7.83	8.35	5.20	6.18	1517
CHHM8-6245DAY	7.5	4	46.18	28.70	5.79	5.00	8.35	1510	49.02	28.70	6.69	7.83	8.35	5.20	6.18	1532
CHHM10-6245DAY	10	4	47.28	28.70	7.40	5.63	9.88	1546	51.02	28.70	7.40	9.37	9.88	6.69	7.17	1583
CHHM15-6245DAY	15	4	49.65	28.70	7.40	5.63	9.88	1577	53.39	28.70	7.40	9.37	9.88	6.69	7.17	1614
CHHM20-6245DAY	20	4	52.99	28.70	9.13	11.61	12.76	1693	56.54	28.70	9.13	15.16	12.76	8.66	-	1766
CHHM25-6245DAY	25	4	56.73	28.70	11.69	13.39	15.51	1841	65.00	28.70	11.69	21.65	15.51	14.45	-	1954
CHHM30-6245DAY	30	4	56.73	28.70	11.69	13.39	15.51	1841	65.00	28.70	11.69	21.65	15.51	14.45	-	1954
CHHM20-6245DBY	20	4	53.82	28.70	9.13	11.61	12.76	1762	57.36	28.70	9.13	15.16	12.76	8.66	-	1824
CHHM30-6245DBY	30	4	57.56	28.70	11.69	13.39	15.51	1899	65.83	28.70	11.69	21.65	15.51	14.45	-	2011
CHHM40-6245DBY	40	4	57.56	28.70	11.69	13.39	15.51	1936	65.83	28.70	11.69	21.65	15.51	14.57	-	2031
CHHM50-6245DBY	50	4	62.09	28.70	11.69	16.93	15.51	2051	70.55	28.70	11.69	25.39	15.51	17.52	-	2265

Dimensions shown are for reference only and are subject to change without notice, unless certified.
Certified prints are available after receipt of an order; consult factory.

CHHM – 6245DA~6275DA (con't.)

Inch (in)

Model	Motor		Without Brake					Appx Wt (lb)	With Brake							Appx Wt (lb)
	HP	Pole	C	O	AB	L	MP		C	O	AB	L	MP	MS	MT	
CHHM5-6255DAY	5	4	50.55	32.09	5.79	5.00	8.35	2271	53.39	32.09	6.69	7.83	8.35	5.20	6.18	2293
CHHM8-6255DAY	7.5	4	52.28	32.09	5.79	5.00	8.35	2293	55.12	32.09	6.69	7.83	8.35	5.20	6.18	2315
CHHM10-6255DAY	10	4	52.99	32.09	7.40	5.63	9.88	2326	56.73	32.09	7.40	9.37	9.88	6.69	7.17	2359
CHHM15-6255DAY	15	4	55.35	32.09	7.40	5.63	9.88	2359	59.09	32.09	7.40	9.37	9.88	6.69	7.17	2392
CHHM20-6255DAY	20	4	58.50	32.09	9.13	11.61	12.76	2470	62.05	32.09	9.13	15.16	12.76	8.66	-	2547
CHHM25-6255DAY	25	4	62.24	32.09	11.69	13.39	15.51	2624	70.51	32.09	11.69	21.65	15.51	14.45	-	2736
CHHM30-6255DAY	30	4	62.24	32.09	11.69	13.39	15.51	2624	70.51	32.09	11.69	21.65	15.51	14.45	-	2736
CHHM40-6255DAY	40	4	62.24	32.09	11.69	13.39	15.51	2668	70.51	32.09	11.69	21.65	15.51	14.57	-	2763
CHHM25-6255DBY	25	4	63.11	32.09	11.69	13.39	15.51	2789	71.38	32.09	11.69	21.65	15.51	14.45	-	2902
CHHM30-6255DBY	30	4	63.11	32.09	11.69	13.39	15.51	2789	71.38	32.09	11.69	21.65	15.51	14.45	-	2902
CHHM40-6255DBY	40	4	63.11	32.09	11.69	13.39	15.51	2822	71.38	32.09	11.69	21.65	15.51	14.57	-	2917
CHHM50-6255DBY	50	4	67.64	32.09	11.69	16.93	15.51	2906	75.91	32.09	11.69	25.39	15.51	17.52	-	3120
CHHM60-6255DBY	60	4	67.64	32.09	11.69	16.93	15.51	2906	75.91	32.09	11.69	25.39	15.51	17.52	-	3120
CHHM8-6265DAY	7.5	4	58.27	34.41	5.79	5.00	8.35	3010	61.10	34.41	6.69	7.83	8.35	5.20	6.18	3032
CHHM10-6265DAY	10	4	58.78	34.41	7.40	5.63	9.88	3043	62.52	34.41	7.40	9.37	9.88	6.69	7.17	3087
CHHM15-6265DAY	15	4	61.14	34.41	7.40	5.63	9.88	3076	64.88	34.41	7.40	9.37	9.88	6.69	7.17	3109
CHHM20-6265DAY	20	4	63.70	34.41	9.13	11.61	12.76	3186	67.24	34.41	9.13	15.16	12.76	8.66	-	3263
CHHM25-6265DAY	25	4	67.44	34.41	11.69	13.39	15.51	3352	75.71	34.41	11.69	21.65	15.51	14.45	-	3451
CHHM30-6265DAY	30	4	67.44	34.41	11.69	13.39	15.51	3352	75.71	34.41	11.69	21.65	15.51	14.45	-	3451
CHHM40-6265DAY	40	4	67.44	34.41	11.69	13.39	15.51	3385	75.71	34.41	11.69	21.65	15.51	14.57	-	3479
CHHM50-6265DAY	50	4	71.97	34.41	11.69	16.93	15.51	3462	80.43	34.41	11.69	25.39	15.51	17.52	-	3676
CHHM60-6265DAY	60	4	71.97	34.41	11.69	16.93	15.51	3462	80.43	34.41	11.69	25.39	15.51	17.52	-	3676
CHHM10-6275DAY	10	4	69.06	45.71	7.40	5.63	9.88	5546	72.80	45.71	7.40	9.37	9.88	6.69	7.17	5590
CHHM15-6275DAY	15	4	71.42	45.71	7.40	5.63	9.88	5579	75.16	45.71	7.40	9.37	9.88	6.69	7.17	5612
CHHM20-6275DAY	20	4	73.98	45.71	9.13	11.61	12.76	5689	77.52	45.71	9.13	15.16	12.76	8.66	-	5766
CHHM25-6275DAY	25	4	77.72	45.71	11.69	13.39	15.51	5854	85.98	45.71	11.69	21.65	15.51	14.45	-	5954
CHHM30-6275DAY	30	4	77.72	45.71	11.69	13.39	15.51	5854	85.98	45.71	11.69	21.65	15.51	14.45	-	5954
CHHM40-6275DAY	40	4	77.72	45.71	11.69	13.39	15.51	5887	85.98	45.71	11.69	21.65	15.51	14.57	-	5982
CHHM50-6275DAY	50	4	82.24	45.71	11.69	16.93	15.51	5971	90.71	45.71	11.69	25.39	15.51	17.52	-	6185
CHHM60-6275DAY	60	4	82.24	45.71	11.69	16.93	15.51	5971	90.71	45.71	11.69	25.39	15.51	17.52	-	6185

INTEGRAL FOOT MOUNT
DOUBLE REDUCTION

CHHM – 6245DA~6275DA (con't.)

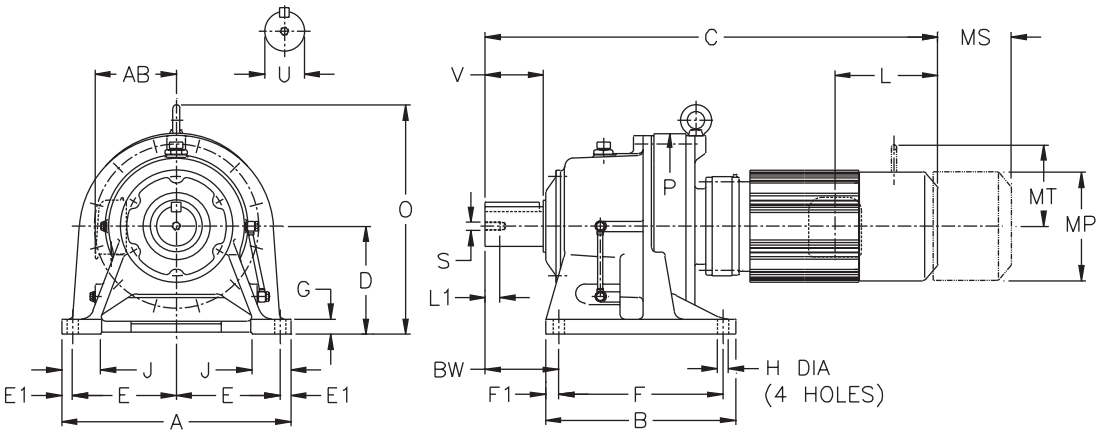

Metric (mm)[1]

Model CHHM	A	B	D	E	E1	F	F1	G	H	J	P	BW
6245DA	720	580	335	315	45	480	50	45	39	128	614	263
6245DB	720	580	335	315	45	480	50	45	39	128	614	263
6255DA	780	630	375	335	55	520	55	50	39	140	670	320
6255DB	780	630	375	335	55	520	55	50	39	140	670	320
6265DA	880	700	400	385	55	590	55	55	45	160	736	390
6275DA	1160	1040	540	525	55	420	100	60	45	200	950	485

Model CHHM	Low Speed Shaft				
	U h6	V	S	L1	Key
6245DA	140	200	M24	41	36 X 20 X 200
6245DB	140	200	M24	41	36 X 20 X 200
6255DA	160	240	M30	49	40 X 22 X 240
6255DB	160	240	M30	49	40 X 22 X 240
6265DA	170	300	M30	49	40 X 22 X 300
6275DA	180	330	M30	52	45 X 25 X 330

Model	Motor		Without Brake					Appx Wt (kg)	With Brake							Appx Wt (kg)
	kW	Pole	C	O	AB	L	MP		C	O	AB	L	MP	MS	MT	
CHHM3-6245DA	2.2	4	1106	729	126	105	173	669	1169	729	154	168	173	121	124	675
CHHM5-6245DA	3.7	4	1129	729	147	127	212	678	1201	729	170	199	212	132	157	688
CHHM8-6245DA	5.5	4	1173	729	147	127	212	685	1245	729	170	199	212	132	157	695
CHHM10-6245DA	7.5	4	1201	729	188	143	251	701	1296	729	188	238	251	170	182	718
CHHM15-6245DA	11	4	1261	729	188	143	251	715	1356	729	188	238	251	170	182	732
CHHM20-6245DA	15	4	1346	729	232	295	324	768	1436	729	232	385	324	220	-	801
CHHM25-6245DA	18.5	4	1441	729	297	340	394	835	1651	729	297	550	394	367	-	886
CHHM30-6245DA	22	4	1441	729	297	340	394	835	1651	729	297	550	394	367	-	886
CHHM20-6245DB	15	4	1367	729	232	295	324	799	1457	729	232	385	324	220	-	827
CHHM30-6245DB	22	4	1462	729	297	340	394	861	1672	729	297	550	394	367	-	912
CHHM40-6245DB	30	4	1462	729	297	340	394	878	1672	729	297	550	394	370	-	921
CHHM50-6245DB	37	4	1577	729	297	430	394	930	1792	729	297	645	394	445	-	1027

Note: [1] The shaft dimensions shown above are hard metric sizes with metric keys. Units are available with shafting made to either DIN/ISO or JIS tolerances. Please consult factory for availability.

Dimensions shown are for reference only and are subject to change without notice, unless certified.
Certified prints are available after receipt of an order; consult factory.

CHHM – 6245DA~6275DA (con't.)

Metric (mm)

Model	Motor		Without Brake					Appx Wt (kg)	With Brake							Appx Wt (kg)
	kW	Pole	C	O	AB	L	MP		C	O	AB	L	MP	MS	MT	
CHHM5-6255DA	3.7	4	1284	815	147	127	212	1030	1356	815	170	199	212	132	157	1040
CHHM8-6255DA	5.5	4	1328	815	147	127	212	1040	1400	815	170	199	212	132	157	1050
CHHM10-6255DA	7.5	4	1346	815	188	143	251	1055	1441	815	188	238	251	170	182	1070
CHHM15-6255DA	11	4	1406	815	188	143	251	1070	1501	815	188	238	251	170	182	1085
CHHM20-6255DA	15	4	1486	815	232	295	324	1120	1576	815	232	385	324	220	-	1155
CHHM25-6255DA	18.5	4	1581	815	297	340	394	1190	1791	815	297	550	394	367	-	1241
CHHM30-6255DA	22	4	1581	815	297	340	394	1190	1791	815	297	550	394	367	-	1241
CHHM40-6255DA	30	4	1581	815	297	340	394	1210	1791	815	297	550	394	370	-	1253
CHHM25-6255DB	18.5	4	1603	815	297	340	394	1265	1813	815	297	550	394	367	-	1316
CHHM30-6255DB	22	4	1603	815	297	340	394	1265	1813	815	297	550	394	367	-	1316
CHHM40-6255DB	30	4	1603	815	297	340	394	1280	1813	815	297	550	394	370	-	1323
CHHM50-6255DB	37	4	1718	815	297	430	394	1318	1928	815	297	645	394	445	-	1415
CHHM60-6255DB	45	4	1718	815	297	430	394	1318	1928	815	297	645	394	445	-	1415
CHHM8-6265DA	5.5	4	1480	874	147	127	212	1365	1552	874	170	199	212	132	157	1375
CHHM10-6265DA	7.5	4	1493	874	188	143	251	1380	1588	874	188	238	251	170	182	1400
CHHM15-6265DA	11	4	1553	874	188	143	251	1395	1648	874	188	238	251	170	182	1410
CHHM20-6265DA	15	4	1618	874	232	295	324	1445	1708	874	232	385	324	220	-	1480
CHHM25-6265DA	18.5	4	1713	874	297	340	394	1520	1923	874	297	550	394	367	-	1565
CHHM30-6265DA	22	4	1713	874	297	340	394	1520	1923	874	297	550	394	367	-	1565
CHHM40-6265DA	30	4	1713	874	297	340	394	1535	1923	874	297	550	394	370	-	1578
CHHM50-6265DA	37	4	1828	874	297	430	394	1570	2043	874	297	645	394	445	-	1667
CHHM60-6265DA	45	4	1828	874	297	430	394	1570	2043	874	297	645	394	445	-	1667
CHHM10-6275DA	7.5	4	1754	1161	188	143	251	2515	1849	1161	188	238	251	170	182	2535
CHHM15-6275DA	11	4	1814	1161	188	143	251	2530	1909	1161	188	238	251	170	182	2545
CHHM20-6275DA	15	4	1879	1161	232	295	324	2580	1969	1161	232	385	324	220	-	2615
CHHM25-6275DA	18.5	4	1974	1161	297	340	394	2655	2184	1161	297	550	394	367	-	2700
CHHM30-6275DA	22	4	1974	1161	297	340	394	2655	2184	1161	297	550	394	367	-	2700
CHHM40-6275DA	30	4	1974	1161	297	340	394	2670	2184	1161	297	550	394	370	-	2713
CHHM50-6275DA	37	4	2089	1161	297	430	394	2708	2304	1161	297	645	394	445	-	2805
CHHM60-6275DA	45	4	2089	1161	297	430	394	2708	2304	1161	297	645	394	445	-	2805

INVERTER DUTY, INTEGRAL FOOT MOUNT
SINGLE REDUCTION

CNHM-606□~612□[1]-AV

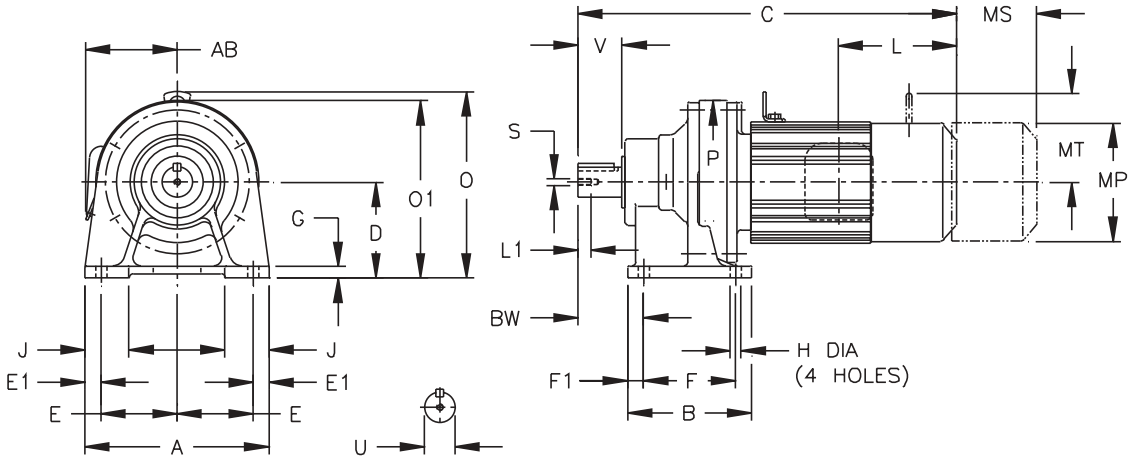

Inch (in)

Model CNHM	A	B	D	E	E1	F	F1	G	H	J	P	BW
606□Y	5.67	3.31	3.150	2.36	0.47	2.36	0.47	0.39	0.35	1.38	4.33	1.61
607□Y	5.67	3.31	3.150	2.36	0.47	2.36	0.47	0.39	0.35	1.38	4.33	1.85
608□Y	5.67	3.90	3.543	2.36	0.47	2.95	0.47	0.51	0.35	1.46	5.28	2.05
609□Y	7.09	5.31	3.937	2.95	0.59	3.54	0.59	0.47	0.43	1.57	5.91	2.36
610□Y	7.09	5.31	3.937	2.95	0.59	3.54	0.59	0.47	0.43	1.57	5.91	2.36
610HY	7.09	5.31	4.724	2.95	0.59	3.54	0.59	0.47	0.43	1.57	5.91	2.36
611□Y	7.09	5.31	4.724	2.95	0.59	3.54	0.59	0.47	0.43	1.77	6.38	2.76
612□Y	9.06	6.10	4.724	3.74	0.79	4.53	0.79	0.59	0.55	2.17	8.03	3.23
612HY	9.06	6.10	5.512	3.74	0.79	4.53	0.79	0.59	0.55	2.36	8.03	3.23

Model CNHM	Low Speed Shaft				
	U*	V	S	L1	Key
606□Y	0.500	0.98	10-32UNF	0.63	1/8 X 1/8 X .79
607□Y	0.750	1.18	12-28UNF	0.63	3/16 X 3/16 X 1.06
608□Y	0.875	1.38	12-28UNF	0.63	3/16 X 3/16 X 1.18
609□Y	1.125	1.38	5/16-18UNC	0.79	1/4 X 1/4 X 1.18
610□Y	1.125	1.38	5/16-18UNC	0.79	1/4 X 1/4 X 1.18
610HY	1.125	1.38	5/16-18UNC	0.79	1/4 X 1/4 X 1.18
611□Y	1.250	1.77	5/16-18UNC	0.79	1/4 X 1/4 X 1.46
612□Y	1.500	2.17	5/16-18UNC	0.79	3/8 X 3/8 X 1.77
612HY	1.500	2.17	5/16-18UNC	0.79	3/8 X 3/8 X 1.77

*** Shaft Tolerances:**

Shaft Nominal Diameter (inches)	Tolerances (inches)
0.500 (1/2) through 0.625 (5/8)	+0.0000/-0.0004
0.750 (3/4) through 1.125 (1 1/8)	+0.0000/-0.0005
1.25 (1 1/4) through 1.875 (1 7/8)	+0.0000/-0.0006

Model	Motor		Without Brake						Appx Wt (lb)	With Brake								Appx Wt (lb)
	HP	Pole	C	O	O1	AB	L	MP		C	O	O1	AB	L	MP	MS	MT	
CNHM01-606□Y-AV	1/8	4	10.55	-	5.43	3.35	2.32	4.88	15	11.81	-	5.43	3.50	3.58	4.88	2.40	-	18
CNHM02-606□Y-AV	1/4	4	11.34	-	5.43	3.35	2.32	4.88	18	12.83	-	5.43	3.50	3.58	4.88	2.40	-	20
CNHM01-607□Y-AV	1/8	4	10.79	-	5.43	3.35	2.32	4.88	15	12.05	-	5.43	3.50	3.58	4.88	2.40	-	18
CNHM02-607□Y-AV	1/4	4	11.57	-	5.43	3.35	2.32	4.88	18	12.83	-	5.43	3.50	3.58	4.88	2.40	-	20
CNHM03-607□Y-AV	1/3	4	11.57	-	5.43	3.35	2.32	4.88	18	12.83	-	5.43	3.50	3.58	4.88	2.40	-	20
CNHM01-608□Y-AV	1/8	4	11.81	-	6.18	3.35	2.32	4.88	22	13.07	-	6.18	3.50	3.58	4.88	2.40	-	24
CNHM02-608□Y-AV	1/4	4	12.60	-	6.18	3.35	2.32	4.88	26	13.86	-	6.18	3.50	3.58	4.88	2.40	-	29
CNHM03-608□Y-AV	1/3	4	12.60	-	6.18	3.35	2.32	4.88	26	13.86	-	6.18	3.50	3.58	4.88	2.40	-	29
CNHM05-608□Y-AV	1/2	4	14.21	7.99	-	4.49	3.82	5.83	35	15.91	7.99	-	5.59	5.51	5.83	3.66	4.17	37

Note: [1] 0 or 5 replaces □ depending on the model selected for the application. Please refer to the Gearmotor Selection Procedure and Tables in this section.

Dimensions shown are for reference only and are subject to change without notice, unless certified.
Certified prints are available after receipt of an order; consult factory.

CNHM-606□~612□[1]-AV (con't.)

Inch (in)

Model	Motor		Without Brake						Appx Wt (lb)	With Brake								Appx Wt (lb)
	HP	Pole	C	O	O1	AB	L	MP		C	O	O1	AB	L	MP	MS	MT	
CNHM02-609□Y-AV	1/4	4	13.31	-	6.89	3.35	2.32	4.88	29	14.57	-	6.89	3.50	3.58	4.88	2.40	-	33
CNHM03-609□Y-AV	1/3	4	13.31	-	6.89	3.35	2.32	4.88	29	14.57	-	6.89	3.50	3.58	4.88	2.40	-	33
CNHM05-609□Y-AV	1/2	4	14.92	8.39	-	4.49	3.82	5.83	37	16.61	8.39	-	5.59	5.51	5.83	3.66	4.17	44
CNHM08-609□Y-AV	3/4	4	16.22	8.66	-	4.69	3.94	6.30	44	18.66	8.66	-	5.79	6.38	6.30	4.53	4.49	55
CNHM1-609□Y-AV	1	4	16.22	8.66	-	4.69	3.94	6.30	44	18.66	8.66	-	5.79	6.38	6.30	4.53	4.49	55
CNHM02-610□Y-AV	1/4	4	13.86	8.15	-	3.35	2.32	4.88	40	15.12	8.15	-	3.50	3.58	4.88	2.40	-	44
CNHM03-610□Y-AV	1/3	4	13.86	8.15	-	3.35	2.32	4.88	40	15.12	8.15	-	3.50	3.58	4.88	2.40	-	44
CNHM05-610□Y-AV	1/2	4	15.47	8.39	-	4.49	3.82	5.83	49	17.17	8.39	-	5.59	5.51	5.83	3.66	4.17	55
CNHM08-610□Y-AV	3/4	4	16.77	8.66	-	4.69	3.94	6.30	57	19.21	8.66	-	5.79	6.38	6.30	4.53	4.49	68
CNHM1-610□Y-AV	1	4	16.77	8.66	-	4.69	3.94	6.30	57	19.21	8.66	-	5.79	6.38	6.30	4.53	4.49	68
CNHM1H-610□Y-AV	1.5	4	17.56	8.90	-	4.96	4.13	6.81	66	20.04	8.90	-	6.06	6.61	6.81	4.76	4.88	79
CNHM2-610□Y-AV	2	4	17.56	8.90	-	4.96	4.13	6.81	66	20.04	8.90	-	6.06	6.61	6.81	4.76	4.88	79
CNHM02-610HY-AV	1/4	4	13.86	8.94	-	3.35	2.32	4.88	42	15.12	8.94	-	3.50	3.58	4.88	2.40	-	46
CNHM03-610HY-AV	1/3	4	13.86	8.94	-	3.35	2.32	4.88	42	15.12	8.94	-	3.50	3.58	4.88	2.40	-	46
CNHM05-610HY-AV	1/2	4	15.47	9.17	-	4.49	3.82	5.83	51	17.17	9.17	-	5.59	5.51	5.83	3.66	4.17	57
CNHM08-610HY-AV	3/4	4	16.77	9.45	-	4.69	3.94	6.30	60	19.21	9.45	-	5.79	6.38	6.30	4.53	4.49	71
CNHM1-610HY-AV	1	4	16.77	9.45	-	4.69	3.94	6.30	60	19.21	9.45	-	5.79	6.38	6.30	4.53	4.49	71
CNHM1H-610HY-AV	1.5	4	17.56	9.69	-	4.96	4.13	6.81	68	20.04	9.69	-	6.06	6.61	6.81	4.76	4.88	82
CNHM2-610HY-AV	2	4	17.56	9.69	-	4.96	4.13	6.81	68	20.04	9.69	-	6.06	6.61	6.81	4.76	4.88	82
CNHM05-611□Y-AV	1/2	4	15.87	9.29	-	4.49	3.82	5.83	49	17.80	9.29	-	5.59	5.51	5.83	3.66	4.17	55
CNHM08-611□Y-AV	3/4	4	17.17	9.45	-	4.69	3.94	6.30	55	19.41	9.45	-	5.79	6.38	6.30	4.53	4.49	66
CNHM1-611□Y-AV	1	4	17.17	9.45	-	4.69	3.94	6.30	55	19.41	9.45	-	5.79	6.38	6.30	4.53	4.49	66
CNHM1H-611□Y-AV	1.5	4	17.95	9.69	-	4.96	4.13	6.81	64	20.43	9.69	-	6.06	6.61	6.81	4.76	4.88	77
CNHM2-611□Y-AV	2	4	17.95	9.69	-	4.96	4.13	6.81	64	20.43	9.69	-	6.06	6.61	6.81	4.76	4.88	77
CNHM3-611□Y-AV	3	4	19.33	10.47	-	5.79	5.00	8.35	86	22.17	10.47	-	6.69	7.83	8.35	5.20	6.18	108
CNHM08-612□Y-AV	3/4	4	17.95	9.45	-	4.69	3.94	6.30	77	20.39	9.45	-	5.79	6.38	6.30	4.53	4.49	88
CNHM1-612□Y-AV	1	4	17.95	9.45	-	4.69	3.94	6.30	77	20.39	9.45	-	5.79	6.38	6.30	4.53	4.49	88
CNHM1H-612□Y-AV	1.5	4	18.74	9.69	-	4.96	4.13	6.81	86	21.22	9.69	-	6.06	6.61	6.81	4.76	4.88	101
CNHM2-612□Y-AV	2	4	18.74	9.69	-	4.96	4.13	6.81	86	21.22	9.69	-	6.06	6.61	6.81	4.76	4.88	101
CNHM3-612□Y-AV	3	4	19.65	10.47	-	5.79	5.00	8.35	108	22.48	10.47	-	6.69	7.83	8.35	5.20	6.18	130
CNHM5-612□Y-AV	5	4	21.38	10.47	-	5.79	5.00	8.35	123	24.21	10.47	-	6.69	7.83	8.35	5.20	6.18	146
CNHM08-612HY-AV	3.4	4	17.95	10.24	-	4.69	3.94	6.30	79	20.39	10.24	-	5.79	6.38	6.30	4.53	4.49	90
CNHM1-612HY-AV	1	4	17.95	10.24	-	4.69	3.94	6.30	79	20.39	10.24	-	5.79	6.38	6.30	4.53	4.49	90
CNHM1H-612HY-AV	1.5	4	18.74	10.47	-	4.96	4.13	6.81	88	21.22	10.47	-	6.06	6.61	6.81	4.76	4.88	104
CNHM2-612HY-AV	2	4	18.74	10.47	-	4.96	4.13	6.81	88	21.22	10.47	-	6.06	6.61	6.81	4.76	4.88	104
CNHM3-612HY-AV	3	4	19.65	11.26	-	5.79	5.00	8.35	110	22.48	11.26	-	6.69	7.83	8.35	5.20	6.18	132
CNHM5-612HY-AV	5	4	21.38	11.26	-	5.79	5.00	8.35	126	24.21	11.26	-	6.69	7.83	8.35	5.20	6.18	148

Note: [1] 0 or 5 replaces □ depending on the model selected for the application. Please refer to the Gearmotor Selection Procedure and Tables in this section.

INVERTER DUTY, INTEGRAL FOOT MOUNT
SINGLE REDUCTION

CNHM-606□~612□[1]-AV (con't.)

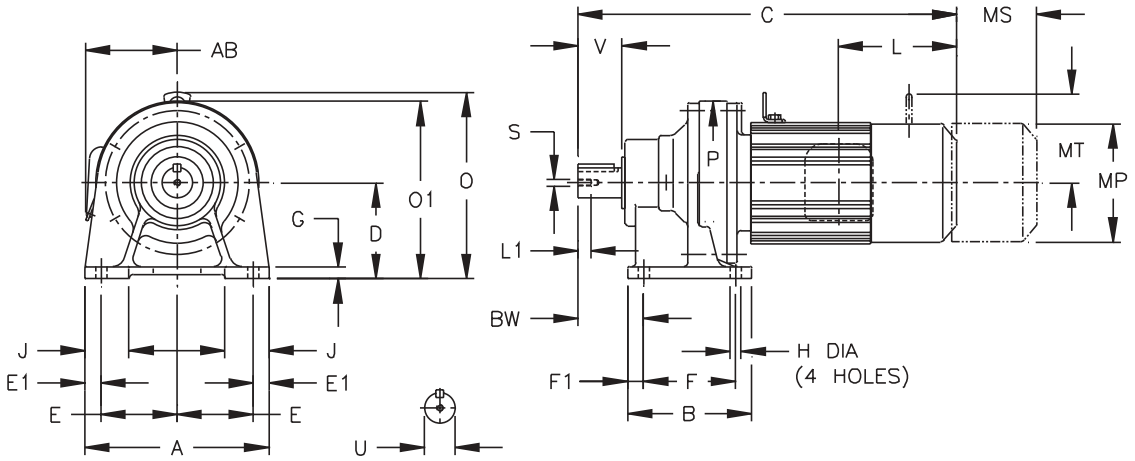

Metric (mm)[2]

Model CNHM	A	B	D	E	E1	F	F1	G	H	J	P	BW
606□	144	84	80	60	12	60	12	10	9	35	110	41
607□	144	84	80	60	12	60	12	10	9	35	110	47
608□	144	99	90	60	12	75	12	13	9	37	134	52
609□	180	135	100	75	15	90	15	12	11	40	150	60
610□	180	135	100	75	15	90	15	12	11	40	150	60
610H	180	135	120	75	15	90	15	12	11	40	150	60
611□	180	135	120	75	15	90	15	12	11	45	162	70
612□	230	155	120	95	20	115	20	15	14	55	204	82
612H	230	155	140	95	20	115	20	15	14	60	204	82

Model CNHM	Low Speed Shaft				
	U h6	V	S	L1	Key
606□	14	25	M5	16	5 X 5 X 20
607□	18	30	M6	16	6 X 6 X 25
608□	22	35	M6	16	6 X 6 X 30
609□	28	35	M8	20	8 X 7 X 32
610□	28	35	M8	20	8 X 7 X 32
610H	28	35	M8	20	8 X 7 X 32
611□	32	45	M8	20	10 X 8 X 37
612□	38	55	M8	20	10 X 8 X 50
612H	38	55	M8	20	10 X 8 X 50

Model	Motor		Without Brake						Appx Wt (kg)	With Brake								Appx Wt (kg)
	kW	Pole	C	O	O1	AB	L	MP		C	O	O1	AB	L	MP	MS	MT	
CNHM01-606□-AV	0.1	4	268	-	138	85	59	124	7	300	-	138	89	91	124	61	-	8
CNHM02-606□-AV	0.2	4	288	-	138	85	59	124	8	326	-	138	89	91	124	61	-	9
CNHM01-607□-AV	0.1	4	274	-	138	85	59	124	7	306	-	138	89	91	124	61	-	8
CNHM02-607□-AV	0.2	4	294	-	138	85	59	124	8	326	-	138	89	91	124	61	-	9
CNHM03-607□-AV	0.25	4	294	-	138	85	59	124	8	326	-	138	89	91	124	61	-	9
CNHM01-608□-AV	0.1	4	300	-	157	85	59	124	10	332	-	157	89	91	124	61	-	11
CNHM02-608□-AV	0.2	4	320	-	157	85	59	124	12	352	-	157	89	91	124	61	-	13
CNHM03-608□-AV	0.25	4	320	-	157	85	59	124	12	352	-	157	89	91	124	61	-	13
CNHM05-608□-AV	0.4	4	361	203	-	114	97	148	16	404	203	-	142	140	148	93	106	17

Notes: [1] 0 or 5 replaces □ depending on the model selected for the application. Please refer to the Gearmotor Selection Procedure and Tables in this section.
[2] The shaft dimensions shown above are hard metric sizes with metric keys. Units are available with shafting made to either DIN/ISO or JIS tolerances. Please consult factory for availability.

Dimensions shown are for reference only and are subject to change without notice, unless certified.
Certified prints are available after receipt of an order; consult factory.

CNHM-606□~612□[1]-AV (con't.)

Metric (mm)

Model	Motor		Without Brake						Appx Wt (kg)	With Brake								Appx Wt (kg)
	kW	Pole	C	O	O1	AB	L	MP		C	O	O1	AB	L	MP	MS	MT	
CNHM02-609□-AV	0.2	4	338	-	175	85	59	124	13	370	-	175	89	91	124	61	-	15
CNHM03-609□-AV	0.25	4	338	-	175	85	59	124	13	370	-	175	89	91	124	61	-	15
CNHM05-609□-AV	0.4	4	379	213	-	114	97	148	17	422	213	-	142	140	148	93	106	20
CNHM08-609□-AV	0.55	4	412	220	-	119	100	160	20	474	220	-	147	162	160	115	114	25
CNHM1-609□-AV	0.75	4	412	220	-	119	100	160	20	474	220	-	147	162	160	115	114	25
CNHM02-610□-AV	0.2	4	352	207	-	85	59	124	18	384	207	-	89	91	124	61	-	20
CNHM03-610□-AV	0.25	4	352	207	-	85	59	124	18	384	207	-	89	91	124	61	-	20
CNHM05-610□-AV	0.4	4	393	213	-	114	97	148	22	436	213	-	142	140	148	93	106	25
CNHM08-610□-AV	0.55	4	426	220	-	119	100	160	26	488	220	-	147	162	160	115	114	31
CNHM1-610□-AV	0.75	4	426	220	-	119	100	160	26	488	220	-	147	162	160	115	114	31
CNHM1H-610□-AV	1.1	4	446	226	-	126	105	173	30	509	226	-	154	168	173	121	124	36
CNHM2-610□-AV	1.5	4	446	226	-	126	105	173	30	509	226	-	154	168	173	121	124	36
CNHM02-610H-AV	0.2	4	352	227	-	85	59	124	19	384	227	-	89	91	124	61	-	21
CNHM03-610H-AV	0.25	4	352	227	-	85	59	124	19	384	227	-	89	91	124	61	-	21
CNHM05-610H-AV	0.4	4	393	233	-	114	97	148	23	436	233	-	142	140	148	93	106	26
CNHM08-610H-AV	0.55	4	426	240	-	119	100	160	27	488	240	-	147	162	160	115	114	32
CNHM1-610H-AV	0.75	4	426	240	-	119	100	160	27	488	240	-	147	162	160	115	114	32
CNHM1H-610H-AV	1.1	4	446	246	-	126	105	173	31	509	246	-	154	168	173	121	124	37
CNHM2-610H-AV	1.5	4	446	246	-	126	105	173	31	509	246	-	154	168	173	121	124	37
CNHM05-611□-AV	0.4	4	403	236	-	114	97	148	22	452	236	-	142	140	148	93	106	25
CNHM08-611□-AV	0.55	4	436	240	-	119	100	160	25	493	240	-	147	162	160	115	114	30
CNHM1-611□-AV	0.75	4	436	240	-	119	100	160	25	493	240	-	147	162	160	115	114	30
CNHM1H-611□-AV	1.1	4	456	246	-	126	105	173	29	519	246	-	154	168	173	121	124	35
CNHM2-611□-AV	1.5	4	456	246	-	126	105	173	29	519	246	-	154	168	173	121	124	35
CNHM3-611□-AV	2.2	4	491	266	-	147	127	212	39	563	266	-	170	199	212	132	157	49
CNHM08-612□-AV	0.55	4	456	240	-	119	100	160	35	518	240	-	147	162	160	115	114	40
CNHM1-612□-AV	0.75	4	456	240	-	119	100	160	35	518	240	-	147	162	160	115	114	40
CNHM1H-612□-AV	1.1	4	476	246	-	126	105	173	39	539	246	-	154	168	173	121	124	46
CNHM2-612□-AV	1.5	4	476	246	-	126	105	173	39	539	246	-	154	168	173	121	124	46
CNHM3-612□-AV	2.2	4	499	266	-	147	127	212	49	571	266	-	170	199	212	132	157	59
CNHM5-612□-AV	3.7	4	543	266	-	147	127	212	56	615	266	-	170	199	212	132	157	66
CNHM08-612H-AV	0.55	4	456	260	-	119	100	160	36	518	260	-	147	162	160	115	114	41
CNHM1-612H-AV	0.75	4	456	260	-	119	100	160	36	518	260	-	147	162	160	115	114	41
CNHM1H-612H-AV	1.1	4	476	266	-	126	105	173	40	539	266	-	154	168	173	121	124	47
CNHM2-612H-AV	1.5	4	476	266	-	126	105	173	40	539	266	-	154	168	173	121	124	47
CNHM3-612H-AV	2.2	4	499	286	-	147	127	212	50	571	286	-	170	199	212	132	157	60
CNHM5-612H-AV	3.7	4	543	286	-	147	127	212	57	615	286	-	170	199	212	132	157	67

Note: [1] 0 or 5 replaces □ depending on the model selected for the application. Please refer to the Gearmotor Selection Procedure and Tables in this section.

INVERTER DUTY, INTEGRAL FOOT MOUNT
SINGLE REDUCTION

CHHM – 613□~619□[1]-AV

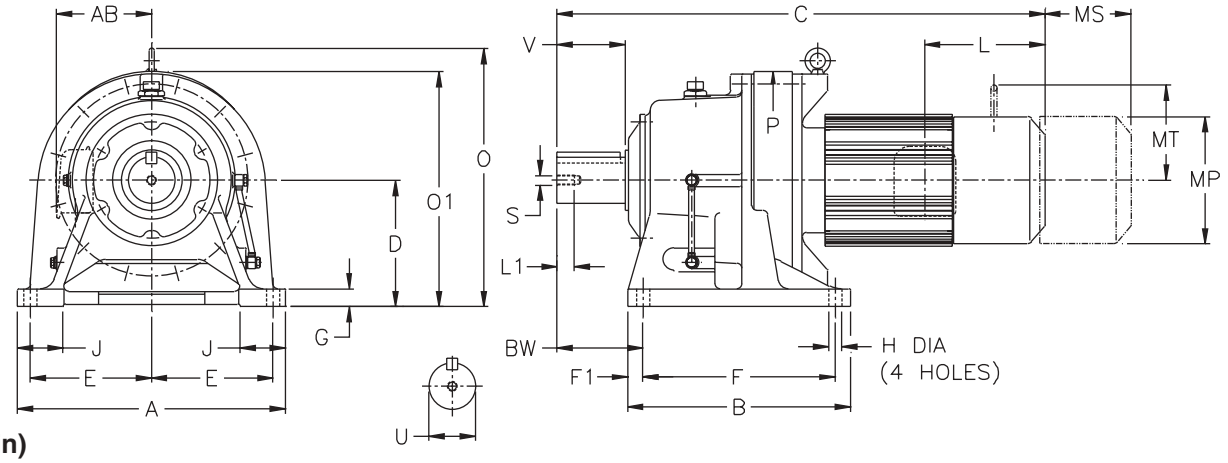

Inch (in)

Model CHHM	A	B	D	E	E1	F	F1	G	H	J	P	BW
613□Y	12.99	7.68	5.906	5.71	0.79	5.71	0.98	0.87	0.71	2.56	9.06	3.94
614□Y	12.99	7.68	5.906	5.71	0.79	5.71	0.98	0.87	0.71	2.56	9.06	4.72
614HY	12.99	7.68	6.299	5.71	0.79	5.71	0.98	0.87	0.71	2.76	9.06	4.72
616□Y	16.14	9.37	6.299	7.28	0.79	5.91	1.73	0.98	0.71	2.95	11.81	5.47
616HY	16.14	9.37	7.874	7.28	0.79	5.91	1.73	0.98	0.71	3.15	11.81	5.47
617□Y	16.93	13.19	7.874	7.48	0.98	10.83	1.18	1.18	0.87	3.15	13.39	4.92
618□Y	18.50	14.96	8.661	8.27	0.98	12.60	1.18	1.18	0.87	3.35	14.57	5.71
619□Y	20.87	17.32	9.843	9.45	0.98	14.96	1.18	1.38	1.02	3.54	16.93	6.69

Model CHHM	Low Speed Shaft				
	U*	V	S	L1	Key
613□Y	1.875	2.76	3/8-16UNC	0.71	1/2 X 1/2 X 2.16
614□Y	1.875	3.54	3/8-16UNC	0.71	1/2 X 1/2 X 2.95
614HY	1.875	3.54	3/8-16UNC	0.71	1/2 X 1/2 X 2.95
616□Y	2.250	3.54	3/8-16UNC	0.71	1/2 X 1/2 X 2.95
616HY	2.250	3.54	3/8-16UNC	0.71	1/2 X 1/2 X 2.95
617□Y	2.750	3.54	1/2-13UNC	0.94	5/8 X 5/8 X 3.15
618□Y	3.125	4.33	1/2-13UNC	0.94	3/4 X 3/4 X 3.74
619□Y	3.625	5.31	3/4-10UNC	1.34	7/8 X 7/8 X 4.92

*** Shaft Tolerances:**

Shaft Nominal Diameter (inches)	Tolerances (inches)
1.25 (1 1/4) through 1.875 (1 7/8)	+0.0000/-0.0006
2.000 (2) through 3.125 (3 1/8)	+0.0000/-0.0007
3.250 (3 1/4) through 4.625 (4 5/8)	+0.0000/-0.0009
4.750 (4 3/4) through 7.000 (7)	+0.0000/-0.0010

Model	Motor		Without Brake					Appx Wt (lb)	With Brake							Appx Wt (lb)
	HP	Pole	C	O	AB	L	MP		C	O	AB	L	MP	MS	MT	
CHHM1-613□Y-AV	1	4	20.08	10.55	4.69	3.94	6.30	119	22.52	10.55	5.79	6.38	6.30	4.53	4.49	130
CHHM1H-613□Y-AV	1.5	4	20.87	10.79	4.96	4.13	6.81	126	23.35	10.79	6.06	6.61	6.81	4.76	4.88	141
CHHM2-613□Y-AV	2	4	20.87	10.79	4.96	4.13	6.81	126	23.35	10.79	6.06	6.61	6.81	4.76	4.88	141
CHHM3-613□Y-AV	3	4	21.77	11.65	5.79	5.00	8.35	148	24.61	11.65	6.69	7.83	8.35	5.20	6.18	170
CHHM5-613□Y-AV	5	4	23.50	11.65	5.79	5.00	8.35	163	26.34	11.65	6.69	7.83	8.35	5.20	6.18	185
CHHM8-613□Y-AV	7.5	4	24.41	12.72	7.40	5.63	9.88	196	28.15	12.72	7.40	9.37	9.88	6.69	7.17	236
CHHM10-613□Y-AV	10	4	26.77	12.72	7.40	5.63	9.88	227	30.51	12.72	7.40	9.37	9.88	6.69	7.17	265
CHHM15-613□Y-AV[2]	15	4	31.10	14.09	9.13	11.61	12.76	340	34.65	12.64	9.13	15.16	12.76	8.66	-	412

Notes: [1] 0 or 5 replaces □ depending on the model selected for the application. Please refer to the Gearmotor Selection Procedure and Tables in this section.
[2] The bottom level of the motor for this model extends lower than the reducer base.

Dimensions shown are for reference only and are subject to change without notice, unless certified.
Certified prints are available after receipt of an order; consult factory.

CHHM – 613□~619□[1]-AV (con't.)

Inch (in)

Model	Motor		Without Brake					Appx Wt (lb)	With Brake							Appx Wt (lb)
	HP	Pole	C	O	AB	L	MP		C	O	AB	L	MP	MS	MT	
CHHM1H-614□Y-AV	1.5	4	21.65	10.79	4.96	4.13	6.81	128	24.13	10.79	6.06	6.61	6.81	4.76	4.88	143
CHHM2-614□Y-AV	2	4	21.65	10.79	4.96	4.13	6.81	128	24.13	10.79	6.06	6.61	6.81	4.76	4.88	143
CHHM3-614□Y-AV	3	4	22.56	11.65	5.79	5.00	8.35	150	25.39	11.65	6.69	7.83	8.35	5.20	6.18	172
CHHM5-614□Y-AV	5	4	24.29	11.65	5.79	5.00	8.35	165	27.13	11.65	6.69	7.83	8.35	5.20	6.18	187
CHHM8-614□Y-AV	7.5	4	25.20	12.72	7.40	5.63	9.88	198	28.94	12.72	7.40	9.37	9.88	6.69	7.17	238
CHHM10-614□Y-AV	10	4	27.56	12.72	7.40	5.63	9.88	227	31.30	12.72	7.40	9.37	9.88	6.69	7.17	267
CHHM15-614□Y-AV[2]	15	4	31.10	14.09	9.13	11.61	12.76	342	34.65	12.64	9.13	15.16	12.76	8.66	-	415
CHHM1H-614HY-AV	1.5	4	21.65	11.18	4.96	4.13	6.81	132	24.13	11.18	6.06	6.61	6.81	4.76	4.88	148
CHHM2-614HY-AV	2	4	21.65	11.18	4.96	4.13	6.81	132	24.13	11.18	6.06	6.61	6.81	4.76	4.88	148
CHHM3-614HY-AV	3	4	22.56	12.05	5.79	5.00	8.35	154	25.39	12.05	6.69	7.83	8.35	5.20	6.18	176
CHHM5-614HY-AV	5	4	24.29	12.05	5.79	5.00	8.35	170	27.13	12.05	6.69	7.83	8.35	5.20	6.18	192
CHHM8-614HY-AV	7.5	4	25.20	13.11	7.40	5.63	9.88	203	28.94	13.11	7.40	9.37	9.88	6.69	7.17	243
CHHM10-614HY-AV	10	4	27.56	13.11	7.40	5.63	9.88	234	31.30	13.11	7.40	9.37	9.88	6.69	7.17	273
CHHM15-614HY-AV[2]	15	4	31.10	14.49	9.13	11.61	12.76	348	34.65	13.03	9.13	15.16	12.76	8.66	-	421
CHHM2-616□Y-AV	2	4	23.54	12.20	4.96	4.13	6.81	212	26.02	12.20	6.06	6.61	6.81	4.76	4.88	225
CHHM3-616□Y-AV	3	4	24.45	12.20	5.79	5.00	8.35	232	27.28	12.20	6.69	7.83	8.35	5.20	6.18	254
CHHM5-616□Y-AV	5	4	26.18	12.20	5.79	5.00	8.35	247	29.02	12.20	6.69	7.83	8.35	5.20	6.18	269
CHHM8-616□Y-AV	7.5	4	27.28	13.11	7.40	5.63	9.88	282	31.02	13.11	7.40	9.37	9.88	6.69	7.17	320
CHHM10-616□Y-AV	10	4	29.65	13.11	7.40	5.63	9.88	313	33.39	13.11	7.40	9.37	9.88	6.69	7.17	351
CHHM15-616□Y-AV[2]	15	4	32.99	14.49	9.13	11.61	12.76	430	36.54	14.49	9.13	15.16	12.76	8.66	-	503
CHHM20-616□Y-AV[2]	20	4	36.73	14.49	11.69	13.39	15.51	589	45.00	14.49	11.69	21.65	15.51	14.45	-	701
CHHM2-616HY-AV	2	4	23.54	13.78	4.96	4.13	6.81	223	26.02	13.78	6.06	6.61	6.81	4.76	4.88	236
CHHM3-616HY-AV	3	4	24.45	13.78	5.79	5.00	8.35	243	27.28	13.78	6.69	7.83	8.35	5.20	6.18	265
CHHM5-616HY-AV	5	4	26.18	13.78	5.79	5.00	8.35	258	29.02	13.78	6.69	7.83	8.35	5.20	6.18	280
CHHM8-616HY-AV	7.5	4	27.28	14.69	7.40	5.63	9.88	293	31.02	14.69	7.40	9.37	9.88	6.69	7.17	331
CHHM10-616HY-AV	10	4	29.65	14.69	7.40	5.63	9.88	324	33.39	14.69	7.40	9.37	9.88	6.69	7.17	362
CHHM15-616HY-AV	15	4	32.99	16.06	9.13	11.61	12.76	441	36.54	16.06	9.13	15.16	12.76	8.66	-	514
CHHM20-616HY-AV	20	4	36.73	16.06	11.69	13.39	15.51	600	45.00	16.06	11.69	21.65	15.51	14.45	-	712
CHHM3-617□Y-AV	3	4	26.77	15.87	5.79	5.00	8.35	322	29.61	15.87	6.69	7.83	8.35	5.20	6.18	344
CHHM5-617□Y-AV	5	4	28.50	15.87	5.79	5.00	8.35	337	31.34	15.87	6.69	7.83	8.35	5.20	6.18	359
CHHM8-617□Y-AV	7.5	4	29.21	15.87	7.40	5.63	9.88	370	32.95	15.87	7.40	9.37	9.88	6.69	7.17	410
CHHM10-617□Y-AV	10	4	31.57	15.87	7.40	5.63	9.88	401	35.31	15.87	7.40	9.37	9.88	6.69	7.17	441
CHHM15-617□Y-AV	15	4	34.72	16.26	9.13	11.61	12.76	520	38.27	16.26	9.13	15.16	12.76	8.66	-	593
CHHM20-617□Y-AV	20	4	38.46	16.81	11.69	13.39	15.51	670	46.73	16.81	11.69	21.65	15.51	14.45	-	783
CHHM25-617□Y-AV	25	4	38.46	16.85	11.69	13.39	15.51	708	46.73	16.81	11.69	21.65	15.51	14.57	-	803
CHHM30-617□Y-AV	30	4	38.46	16.85	11.69	13.39	15.51	708	46.73	16.81	11.69	21.65	15.51	14.57	-	803
CHHM8-618□Y-AV	7.5	4	30.67	17.24	7.40	5.63	9.88	454	34.41	17.24	7.40	9.37	9.88	6.69	7.17	494
CHHM10-618□Y-AV	10	4	33.03	17.24	7.40	5.63	9.88	485	36.77	17.24	7.40	9.37	9.88	6.69	7.17	525
CHHM15-618□Y-AV	15	4	36.18	17.24	9.13	11.61	12.76	617	39.72	17.24	9.13	15.16	12.76	8.66	-	679
CHHM20-618□Y-AV	20	4	39.92	17.64	11.69	13.39	15.51	754	48.19	17.64	11.69	21.65	15.51	14.45	-	867
CHHM25-618□Y-AV	25	4	39.92	17.64	11.69	13.39	15.51	792	48.19	17.64	11.69	21.65	15.51	14.57	-	886
CHHM30-618□Y-AV	30	4	39.92	17.64	11.69	13.39	15.51	792	48.19	17.64	11.69	21.65	15.51	14.57	-	886
CHHM40-618□Y-AV	40	4	44.45	18.94	11.69	18.11	15.51	897	52.91	18.94	11.69	21.65	15.51	11.61	-	1111
CHHM15-619□Y-AV	15	4	39.17	18.39	9.13	11.61	12.76	761	42.72	18.39	9.13	15.16	12.76	8.66	-	836
CHHM20-619□Y-AV	20	4	42.91	20.12	11.69	13.39	15.51	919	51.18	20.12	11.69	21.65	15.51	14.45	-	1019
CHHM25-619□Y-AV	25	4	42.91	20.12	11.69	13.39	15.51	953	51.18	20.12	11.69	21.65	15.51	14.57	-	1047
CHHM30-619□Y-AV	30	4	42.91	20.12	11.69	13.39	15.51	953	51.18	20.12	11.69	21.65	15.51	14.57	-	1047
CHHM40-619□Y-AV	40	4	47.44	20.12	11.69	18.11	15.51	1036	55.91	20.12	11.69	21.65	15.51	11.61	-	1250
CHHM50-619□Y-AV	50	4	47.44	20.12	11.69	18.11	15.51	1036	55.91	20.12	11.69	28.03	15.51	11.61	-	1250

Notes: [1] 0 or 5 replaces □ depending on the model selected for the application. Please refer to the Gearmotor Selection Procedure and Tables in this section.
[2] The bottom level of the motor for this model extends lower than the reducer base.

Dimensions shown are for reference only and are subject to change without notice, unless certified.
Certified prints are available after receipt of an order; consult factory.

INVERTER DUTY, INTEGRAL FOOT MOUNT
SINGLE REDUCTION

CHHM – 613□~619□[1]-AV

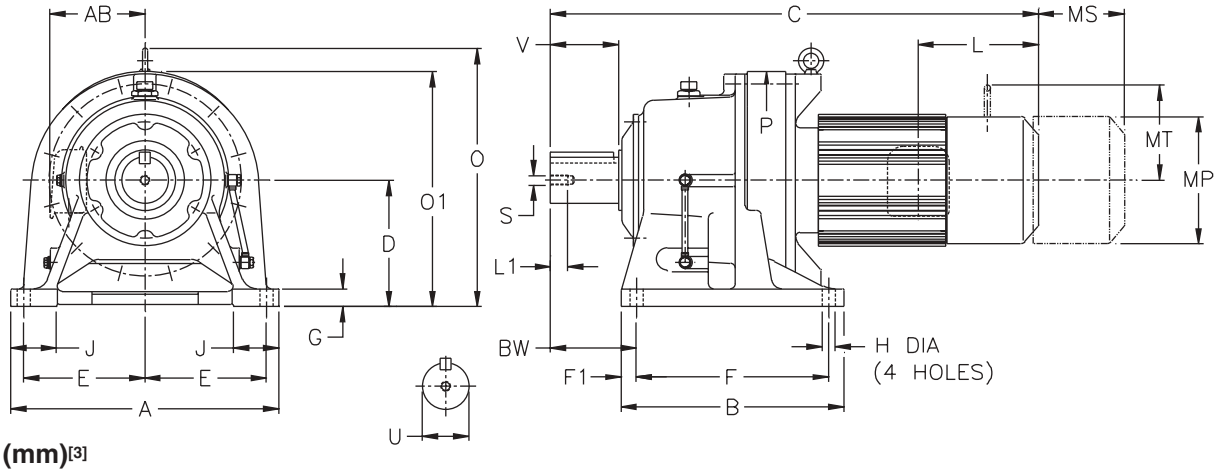

Metric (mm)[3]

Model CHHM	A	B	D	E	E1	F	F1	G	H	J	P	BW
613□	330	195	150	145	20	145	25	22	18	65	230	100
614□	330	195	150	145	20	145	25	22	18	65	230	120
614H	330	195	160	145	20	145	25	22	18	70	230	120
616□	410	238	160	185	20	150	44	25	18	75	300	139
616H	410	238	200	185	20	150	44	25	18	80	300	139
617□	430	335	200	190	25	275	30	30	22	80	340	125
618□	470	380	220	210	25	320	30	30	22	85	370	145
619□	530	440	250	240	25	380	30	35	26	90	430	170

Model CHHM	Low Speed Shaft				
	U h6	V	S	L1	Key
613□	50	70	M10	18	14 X 9 X 56
614□	50	90	M10	18	14 X 9 X 80
614H	50	90	M10	18	14 X 9 X 80
616□	60	90	M10	18	18 X 11 X 80
616H	60	90	M10	18	18 X 11 X 80
617□	70	90	M12	24	20 X 12 X 80
618□	80	110	M12	24	22 X 14 X 100
619□	95	135	M20	34	25 X 14 X 125

Model	Motor		Without Brake					Appx Wt (kg)	With Brake							Appx Wt (kg)
	kW	Pole	C	O	AB	L	MP		C	O	AB	L	MP	MS	MT	
CHHM1-613□-AV	0.75	4	510	268	119	100	160	54	572	268	147	162	160	115	114	59
CHHM1H-613□-AV	1.1	4	530	274	126	105	173	57	593	274	154	168	173	121	124	64
CHHM2-613□-AV	1.5	4	530	274	126	105	173	57	593	274	154	168	173	121	124	64
CHHM3-613□-AV	2.2	4	553	296	147	127	212	67	625	296	170	199	212	132	157	77
CHHM5-613□-AV	3.7	4	597	296	147	127	212	74	669	296	170	199	212	132	157	84
CHHM8-613□-AV	5.5	4	620	323	188	143	251	89	715	323	188	238	251	170	182	107
CHHM10-613□-AV	7.5	4	680	323	188	143	251	103	775	323	188	238	251	170	182	120
CHHM15-613□-AV[2]	11	1	790	358	232	295	324	154	880	321	232	385	324	220	-	187

Notes: [1] 0 or 5 replaces □ depending on the model selected for the application. Please refer to the Gearmotor Selection Procedure and Tables in this section.
[2] The bottom level of the motor for this model extends lower than the reducer base.
[3] The shaft dimensions shown above are hard metric sizes with metric keys. Units are available with shafting made to either DIN/ISO or JIS tolerances. Please consult factory for availability.

Dimensions shown are for reference only and are subject to change without notice, unless certified.
Certified prints are available after receipt of an order; consult factory.

CHHM – 613□~619□[1]-AV (con't.)

Metric (mm)

Model	Motor		Without Brake					Appx Wt (kg)	With Brake							Appx Wt (kg)
	kW	Pole	C	O	AB	L	MP		C	O	AB	L	MP	MS	MT	
CHHM1H-614□-AV	1.1	4	550	274	126	105	173	58	613	274	154	168	173	121	124	65
CHHM2-614□-AV	1.5	4	550	274	126	105	173	58	613	274	154	168	173	121	124	65
CHHM3-614□-AV	2.2	4	573	296	147	127	212	68	645	296	170	199	212	132	157	78
CHHM5-614□-AV	3.7	4	617	296	147	127	212	75	689	296	170	199	212	132	157	85
CHHM8-614□-AV	5.5	4	640	323	188	143	251	90	735	323	188	238	251	170	182	108
CHHM10-614□-AV	7.5	4	700	323	188	143	251	103	795	323	188	238	251	170	182	121
CHHM15-614□-AV[2]	11	4	790	358	232	295	324	155	880	321	232	385	324	220	-	188
CHHM1H-614H-AV	1.1	4	550	284	126	105	173	60	613	284	154	168	173	121	124	67
CHHM2-614H-AV	1.5	4	550	284	126	105	173	60	613	284	154	168	173	121	124	67
CHHM3-614H-AV	2.2	4	573	306	147	127	212	70	645	306	170	199	212	132	157	80
CHHM5-614H-AV	3.7	4	617	306	147	127	212	77	689	306	170	199	212	132	157	87
CHHM8-614H-AV	5.5	4	640	333	188	143	251	92	735	333	188	238	251	170	182	110
CHHM10-614H-AV	7.5	4	700	333	188	143	251	106	795	333	188	238	251	170	182	124
CHHM15-614H-AV[2]	11	4	790	368	232	295	324	158	880	331	232	385	324	220	-	191
CHHM2-616□-AV	1.5	4	598	310	126	105	173	96	661	310	154	168	173	121	124	102
CHHM3-616□-AV	2.2	4	621	310	147	127	212	105	693	310	170	199	212	132	157	115
CHHM5-616□-AV	3.7	4	665	310	147	127	212	112	737	310	170	199	212	132	157	122
CHHM8-616□-AV	5.5	4	693	333	188	143	251	128	788	333	188	238	251	170	182	145
CHHM10-616□-AV	7.5	4	753	333	188	143	251	142	848	333	188	238	251	170	182	159
CHHM15-616□-AV[2]	11	4	838	368	232	295	324	195	928	368	232	385	324	220	-	228
CHHM20-616□-AV[2]	15	4	933	368	297	340	394	267	1143	368	297	550	394	367	-	318
CHHM2-616H-AV	1.5	4	598	350	126	105	173	101	661	350	154	168	173	121	124	107
CHHM3-616H-AV	2.2	4	621	350	147	127	212	110	693	350	170	199	212	132	157	120
CHHM5-616H-AV	3.7	4	665	350	147	127	212	117	737	350	170	199	212	132	157	127
CHHM8-616H-AV	5.5	4	693	373	188	143	251	133	788	373	188	238	251	170	182	150
CHHM10-616H-AV	7.5	4	753	373	188	143	251	147	848	373	188	238	251	170	182	164
CHHM15-616H-AV	11	4	838	408	232	295	324	200	928	408	232	385	324	220	-	233
CHHM20-616H-AV	15	4	933	408	297	340	394	272	1143	408	297	550	394	367	-	323
CHHM3-617□-AV	2.2	4	680	403	147	127	212	146	752	403	170	199	212	132	157	156
CHHM5-617□-AV	3.7	4	724	403	147	127	212	153	796	403	170	199	212	132	157	163
CHHM8-617□-AV	5.5	4	742	403	188	143	251	168	837	403	188	238	251	170	182	186
CHHM10-617□-AV	7.5	4	802	403	188	143	251	182	897	403	188	238	251	170	182	200
CHHM15-617□-AV	11	4	882	413	232	295	324	236	972	413	232	385	324	220	-	269
CHHM20-617□-AV	15	4	977	427	297	340	394	304	1187	427	297	550	394	367	-	355
CHHM25-617□-AV	18.5	4	977	428	297	340	394	321	1187	427	297	550	394	370	-	364
CHHM30-617□-AV	22	4	977	428	297	340	394	321	1187	427	297	550	394	370	-	364
CHHM8-618□-AV	5.5	4	779	438	188	143	251	206	874	438	188	238	251	170	182	224
CHHM10-618□-AV	7.5	4	839	438	188	143	251	220	934	438	188	238	251	170	182	238
CHHM15-618□-AV	11	4	919	438	232	295	324	280	1009	438	232	385	324	220	-	308
CHHM20-618□-AV	15	4	1014	448	297	340	394	342	1224	448	297	550	394	367	-	393
CHHM25-618□-AV	18.5	4	1014	448	297	340	394	359	1224	448	297	550	394	370	-	402
CHHM30-618□-AV	22	4	1014	448	297	340	394	359	1224	448	297	550	394	370	-	402
CHHM40-618□-AV	30	4	1129	481	297	460	394	407	1344	481	297	550	394	295	-	504
CHHM15-619□-AV	11	4	995	467	232	295	324	345	1085	467	232	385	324	220	-	379
CHHM20-619□-AV	15	4	1090	511	297	340	394	417	1300	511	297	550	394	367	-	462
CHHM25-619□-AV	18.5	4	1090	511	297	340	394	432	1300	511	297	550	394	370	-	475
CHHM30-619□-AV	22	4	1090	511	297	340	394	432	1300	511	297	550	394	370	-	475
CHHM40-619□-AV	30	4	1205	511	297	460	394	470	1420	511	297	550	394	295	-	567
CHHM50-619□-AV	37	4	1205	511	297	460	394	470	1420	511	297	712	394	295	-	567

Notes: [1] 0 or 5 replaces □ depending on the model selected for the application. Please refer to the Gearmotor Selection Procedure and Tables in this section.
[2] The bottom level of the motor for this model extends lower than the reducer base.

INVERTER DUTY, INTEGRAL FOOT MOUNT
SINGLE REDUCTION

CHHM – 6215~6235-AV

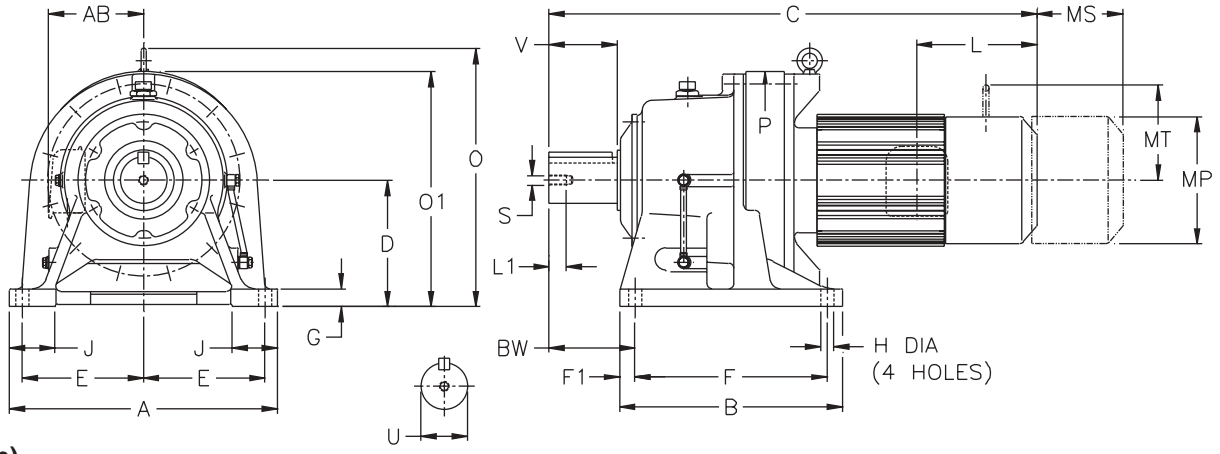

Inch (in)

Model CHHM	A	B	D	E	E1	F	F1	G	H	J	P	BW
6215Y	22.83	18.70	10.433	9.45	1.97	15.55	1.57	1.57	1.02	4.33	19.09	8.27
6225Y	24.41	20.47	11.024	10.63	1.57	16.54	1.97	1.57	1.30	4.53	20.71	9.06
6235Y	26.38	22.05	11.811	11.42	1.77	18.11	1.97	1.77	1.30	4.72	22.13	10.24

Model CHHM	Low Speed Shaft				
	U*	V	S	L1	Key
6215Y	4.250	6.50	3/4-10UNC	1.34	1 X 1 X 6.50
6225Y	4.625	6.50	3/4-10UNC	1.34	1-1/4 X 7/8 X 6.5
6235Y	5.000	7.87	1-8UNC	1.61	1-1/4 X 7/8 X 7.87

*** Shaft Tolerances:**

Shaft Nominal Diameter (inches)	Tolerances (inches)
1.25 (1 1/4) through 1.875 (1 7/8)	+0.0000/-0.0006
2.000 (2) through 3.125 (3 1/8)	+0.0000/-0.0007
3.250 (3 1/4) through 4.625 (4 5/8)	+0.0000/-0.0009
4.750 (4 3/4) through 7.000 (7)	+0.0000/-0.0010

Model	Motor		Without Brake					Appx Wt (lb)	With Brake							Appx Wt (lb)
	HP	Pole	C	O	AB	L	MP		C	O	AB	L	MP	MS	MT	
CHHM50-6215Y-AV	50	4	49.84	22.64	11.69	16.93	15.51	1248	58.31	22.64	11.69	25.39	15.51	17.52	-	1458
CHHM50-6225Y-AV	50	4	51.42	24.02	11.69	16.93	15.51	1435	59.88	24.02	11.69	25.39	15.51	17.52	-	1645
CHHM256-6235Y-AV	25	6	53.86	26.26	11.69	16.93	15.51	1641	62.32	26.26	11.69	25.39	15.51	17.52	-	1835
CHHM506-6235Y-AV	50	6	56.02	26.26	16.22	18.11	19.06	1837	-	-	-	28.03	-	11.61	-	-

Dimensions shown are for reference only and are subject to change without notice, unless certified.
Certified prints are available after receipt of an order; consult factory.

INVERTER DUTY, INTEGRAL FOOT MOUNT
SINGLE REDUCTION

CHHM – 6215~6235-AV (con't.)

Metric (mm)[1]

Model	A	B	D	E	E1	F	F1	G	H	J	P	BW
6215	580	475	265	240	50	395	40	40	26	110	485	210
6225	620	520	280	270	40	420	50	40	33	115	526	230
6235	670	560	300	290	45	460	50	45	33	120	562	260

Model	Low Speed Shaft				
	U h6	V	S	L1	Key
6215	110	165	M20	34	28 X 16 X 165
6225	120	165	M20	34	32 X 18 X 165
6235	130	200	M24	41	32 X 18 X 200

Model	Motor		Without Brake					Appx Wt (kg)	With Brake							Appx Wt (kg)
	kW	Pole	C	O	AB	L	MP		C	O	AB	L	MP	MS	MT	
CHHM50-6215-AV	37	4	1266	575	297	430	394	566	1481	575	297	645	394	445	-	661
CHHM50-6225-AV	37	4	1306	610	297	430	394	651	1521	610	297	645	394	445	-	746
CHHM256-6235-AV	18.5	6	1368	667	297	430	394	744	1583	667	297	645	394	445	-	832
CHHM506-6235-AV	37	6	1423	667	412	460	484	833	-	-	-	-	-	-	-	-

Note: [1] The shaft dimensions shown above are hard metric sizes with metric keys. Units are available with shafting made to either DIN/ISO or JIS tolerances. Please consult factory for availability.

INVERTER DUTY, INTEGRAL FOOT MOUNT
DOUBLE REDUCTION

CNHM-606□DA~612□DB[1]-AV

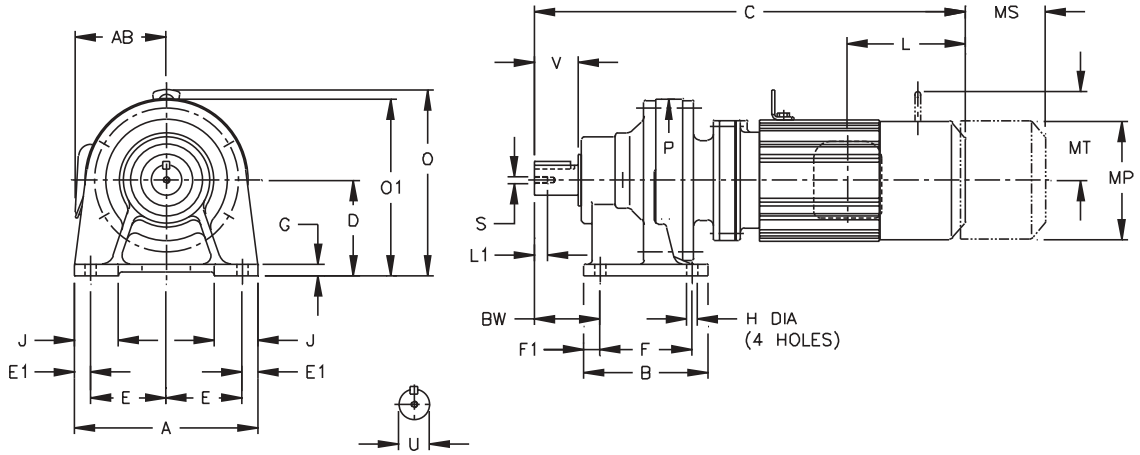

Inch (in)

Model CNHM	A	B	D	E	E1	F	F1	G	H	J	P	BW
606□DAY	5.67	3.31	3.150	2.36	0.47	2.36	0.47	0.39	0.35	1.38	4.33	1.61
607□DAY	5.67	3.31	3.150	2.36	0.47	2.36	0.47	0.39	0.35	1.38	4.33	1.85
609□DAY	7.09	5.31	3.937	2.95	0.59	3.54	0.59	0.47	0.43	1.57	5.91	2.36
610□DAY	7.09	5.31	3.937	2.95	0.59	3.54	0.59	0.47	0.43	1.57	5.91	2.36
612□DBY	9.06	6.10	4.724	3.74	0.79	4.53	0.79	0.59	0.55	2.17	8.03	3.23

Model CNHM	Low Speed Shaft				
	U*	V	S	L1	Key
606□DAY	0.500	0.98	10-32UNF	0.63	1/8 X 1/8 X .79
607□DAY	0.750	1.18	12-28UNF	0.63	3/16 X 3/16 X 1.06
609□DAY	1.125	1.38	5/16-18UNC	0.79	1/4 X 1/4 X 1.18
610□DAY	1.125	1.38	5/16-18UNC	0.79	1/4 X 1/4 X 1.18
612□DBY	1.500	2.17	5/16-18UNC	0.79	3/8 X 3/8 X 1.77

*** Shaft Tolerances:**

Shaft Nominal Diameter (inches)	Tolerances (inches)
0.500 (1/2) through 0.625 (5/8)	+0.0000/-0.0004
0.750 (3/4) through 1.125 (1 1/8)	+0.0000/-0.0005
1.25 (1 1/4) through 1.875 (1 7/8)	+0.0000/-0.0006

Model	Motor		Without Brake						Appx Wt (lb)	With Brake								Appx Wt (lb)
	HP	Pole	C	O	O1	AB	L	MP		C	O	O1	AB	L	MP	MS	MT	
CNHM01-606□DAY-AV	1/8	4	10.20	-	5.51	3.35	2.32	4.69	18	11.57	-	5.43	3.50	3.58	4.88	2.40	-	20
CNHM01-607□DAY-AV	1/8	4	10.43	-	5.51	3.35	2.32	4.69	18	11.81	-	5.43	3.50	3.58	4.88	2.40	-	20
CNHM02-607□DAY-AV	1/4	4	12.09	-	5.51	3.35	2.32	4.88	20	13.35	-	5.43	3.50	3.58	4.88	2.40	-	22
CNHM01-609□DAY-AV	1/8	4	12.76	8.15	-	3.35	2.32	4.69	35	14.13	8.15	-	3.50	3.58	4.88	2.40	-	37
CNHM02-609□DAY-AV	1/4	4	14.41	8.15	-	3.35	2.32	4.88	37	15.67	8.15	-	3.50	3.58	4.88	2.40	-	40
CNHM03-609□DAY-AV	1/3	4	14.41	8.15	-	3.35	2.32	4.88	37	15.67	8.15	-	3.50	3.58	4.88	2.40	-	40
CNHM05-609□DAY-AV	1/2	4	15.20	8.15	-	3.35	3.82	4.88	40	16.46	8.15	-	3.50	5.51	4.88	3.66	4.17	42
CNHM01-610□DAY-AV	1/8	4	13.31	8.15	-	3.35	2.32	4.69	40	14.69	8.15	-	3.50	3.58	4.88	2.40	-	42
CNHM02-610□DAY-AV	1/4	4	14.96	8.15	-	3.35	2.32	4.88	42	16.22	8.15	-	3.50	3.58	4.88	2.40	-	44
CNHM03-610□DAY-AV	1/3	4	14.96	8.15	-	3.35	2.32	4.88	42	16.22	8.15	-	3.50	3.58	4.88	2.40	-	44
CNHM05-610□DAY-AV	1/2	4	15.75	8.15	-	3.35	3.82	4.88	44	17.01	8.15	-	3.50	5.51	4.88	3.66	4.17	46
CNHM01-612□DBY-AV	1/8	4	15.20	10.12	-	3.35	2.32	4.69	71	16.57	10.12	-	3.50	3.58	4.88	2.40	-	75
CNHM03-612□DBY-AV	1/3	4	16.85	10.12	-	3.35	2.32	4.88	73	18.62	10.12	-	3.50	3.58	4.88	2.40	-	77
CNHM05-612□DBY-AV	1/2	4	17.64	10.12	-	3.35	3.82	4.88	75	18.62	10.12	-	3.50	5.51	4.88	3.66	4.17	79
CNHM08-612□DBY-AV	3/4	4	19.25	10.12	-	4.49	3.94	5.83	84	20.94	10.12	-	5.59	6.38	5.83	4.53	4.49	90
CNHM1-612□DBY-AV	1	4	19.25	10.12	-	4.49	3.94	5.83	84	20.94	10.12	-	5.59	6.38	5.83	4.53	4.49	90
CNHM1H-612□DBY-AV	1.5	4	20.31	10.12	-	4.69	4.13	6.30	90	22.76	10.12	-	5.79	6.61	6.30	4.76	4.88	101
CNHM2-612□DBY-AV	2	4	20.31	10.12	-	4.69	4.13	6.30	90	22.76	10.12	-	5.79	6.61	6.30	4.76	4.88	101

Note: [1] 0 or 5 replaces □ depending on the model selected for the application. Please refer to the Gearmotor Selection Procedure and Tables in this section.

Dimensions shown are for reference only and are subject to change without notice, unless certified.
Certified prints are available after receipt of an order; consult factory.

CNHM-606□DA~612□DB[1]-AV (con't.)

Metric (mm)[2]

Model CNHM	A	B	D	E	E1	F	F1	G	H	J	P	BW
606□DA	144	84	80	60	12	60	12	10	9	35	110	41
607□DA	144	84	80	60	12	60	12	10	9	35	110	47
609□DA	180	135	100	75	15	90	15	12	11	40	150	60
610□DA	180	135	100	75	15	90	15	12	11	40	150	60
612□DB	230	155	120	95	20	115	20	15	14	55	204	82

Model CNHM	Low Speed Shaft				
	U h6	V	L1	S	Key
606□DA	14	25	M5	16	5 X 5 X 20
607□DA	18	30	M6	16	6 X 6 X 25
609□DA	28	35	M8	20	8 X 7 X 32
610□DA	28	35	M8	20	8 X 7 X 32
612□DB	38	55	M8	20	10 X 8 X 50

Model	Motor		Without Brake						Appx Wt (kg)	With Brake								Appx Wt (kg)
	kW	Pole	C	O	O1	AB	L	MP		C	O	O1	AB	L	MP	MS	MT	
CNHM01-606□DA-AV	0.1	4	259	-	140	85	59	119	8	294	-	138	89	91	124	61	-	9
CNHM01-607□DA-AV	0.1	4	265	-	140	85	59	119	8	300	-	138	89	91	124	61	-	9
CNHM02-607□DA-AV	0.2	4	307	-	140	85	59	124	9	339	-	138	89	91	124	61	-	10
CNHM01-609□DA-AV	0.1	4	324	207	-	85	59	119	16	359	207	-	89	91	124	61	-	17
CNHM02-609□DA-AV	0.2	4	366	207	-	85	59	124	17	398	207	-	89	91	124	61	-	18
CNHM03-609□DA-AV	0.25	4	366	207	-	85	59	124	17	398	207	-	89	91	124	61	-	18
CNHM05-609□DA-AV	0.4	4	386	207	-	85	97	124	18	418	207	-	89	140	124	93	106	19
CNHM01-610□DA-AV	0.1	4	338	207	-	85	59	119	18	373	207	-	89	91	124	61	-	19
CNHM02-610□DA-AV	0.2	4	380	207	-	85	59	124	19	412	207	-	89	91	124	61	-	20
CNHM03-610□DA-AV	0.25	4	380	207	-	85	59	124	19	412	207	-	89	91	124	61	-	20
CNHM05-610□DA-AV	0.4	4	400	207	-	85	97	124	20	432	207	-	89	140	124	93	106	21
CNHM01-612□DB-AV	0.1	4	386	257	-	85	59	119	32	421	257	-	89	91	124	61	-	34
CNHM03-612□DB-AV	0.25	4	428	257	-	85	59	124	33	473	257	-	89	91	124	61	-	35
CNHM05-612□DB-AV	0.4	4	448	257	-	85	97	124	34	473	257	-	89	140	124	93	106	36
CNHM08-612□DB-AV	0.55	4	489	257	-	114	100	148	38	532	257	-	142	162	148	115	114	41
CNHM1-612□DB-AV	0.75	4	489	257	-	114	100	148	38	532	257	-	142	162	148	115	114	41
CNHM1H-612□DB-AV	1.1	4	516	257	-	119	105	160	41	578	257	-	147	168	160	121	124	46
CNHM2-612□DB-AV	1.5	4	516	257	-	119	105	160	41	578	257	-	147	168	160	121	124	46

Notes: [1] 0 or 5 replaces □ depending on the model selected for the application. Please refer to the Gearmotor Selection Procedure and Tables in this section.
[2] The shaft dimensions shown above are hard metric sizes with metric keys. Units are available with shafting made to either DIN/ISO or JIS tolerances. Please consult factory for availability.

INVERTER DUTY, INTEGRAL FOOT MOUNT
DOUBLE REDUCTION

CHHM-613□DC~614□DB[1]-AV

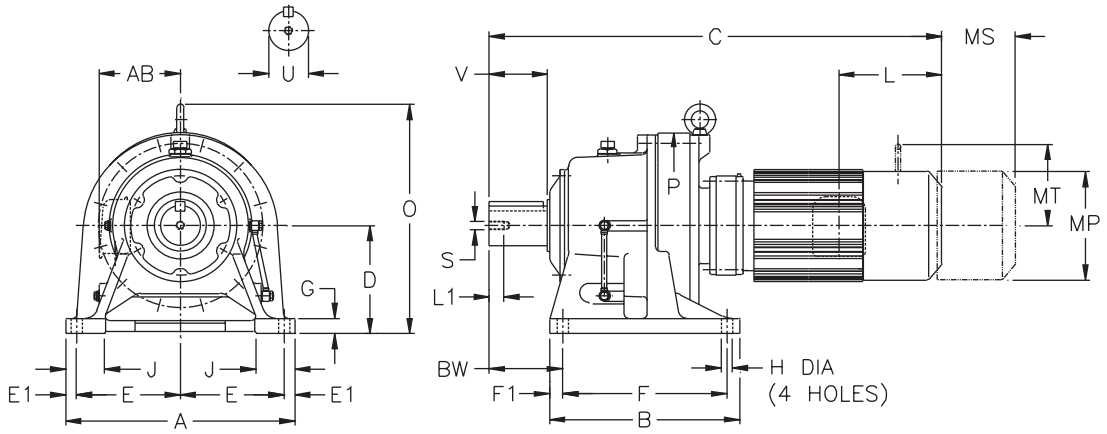

Inch (in)

Model CHHM	A	B	D	E	E1	F	F1	G	H	J	P	BW
613□DCY	12.99	7.68	5.906	5.71	0.79	5.71	0.98	0.87	0.71	2.56	9.06	3.94
614□DBY	12.99	7.68	5.906	5.71	0.79	5.71	0.98	0.87	0.71	2.56	9.06	4.72

Model CHHM	Low Speed Shaft				
	U*	V	S	L1	Key
613□DCY	1.875	2.76	3/8-16UNC	0.71	1/2 X 1/2 X 2.16
614□DBY	1.875	3.54	3/8-16UNC	0.71	1/2 X 1/2 X 2.95

*** Shaft Tolerances:**

Shaft Nominal Diameter (inches)	Tolerances (inches)
1.25 (1 1/4) through 1.875 (1 7/8)	+0.0000/-0.0006
2.000 (2) through 3.125 (3 1/8)	+0.0000/-0.0007

Model	Motor		Without Brake					Appx Wt (lb)	With Brake							Appx Wt (lb)
	HP	Pole	C	O	AB	L	MP		C	O	AB	L	MP	MS	MT	
CHHM02-613□DCY-AV	1/4	4	20.20	11.81	3.35	2.32	4.88	112	21.46	11.81	3.50	3.58	4.88	2.40	-	117
CHHM03-613□DCY-AV	1/3	4	20.20	11.81	3.35	2.32	4.88	112	21.46	11.81	3.50	3.58	4.88	2.40	-	117
CHHM05-613□DCY-AV	1/2	4	21.81	10.35	4.49	3.82	5.83	121	23.50	10.35	5.59	5.51	5.83	3.66	4.17	128
CHHM08-613□DCY-AV	3/4	4	21.81	10.35	4.49	3.82	5.83	121	23.50	10.35	5.59	5.51	5.83	3.66	4.17	128
CHHM1-613□DCY-AV	1	4	23.11	10.63	4.69	3.94	6.30	130	25.55	10.63	5.79	6.38	6.30	4.53	4.49	141
CHHM1H-613□DCY-AV	1.5	4	23.90	10.87	4.96	4.13	6.81	139	26.38	10.87	6.06	6.61	6.81	4.76	4.88	152
CHHM2-613□DCY-AV	2	4	23.90	10.87	4.96	4.13	6.81	139	26.38	10.87	6.06	6.61	6.81	4.76	4.88	152
CHHM3-613□DCY-AV	3	4	23.90	10.87	4.96	5.00	6.81	139	26.38	10.87	6.06	7.83	6.81	5.20	6.18	152
CHHM01-614□DBY-AV	1/8	4	19.65	11.81	3.35	2.32	4.88	106	20.91	11.81	3.50	3.58	4.88	2.40	-	110
CHHM02-614□DBY-AV	1/4	4	20.43	11.81	3.35	2.32	4.88	108	21.69	11.81	3.50	3.58	4.88	2.40	-	112
CHHM03-614□DBY-AV	1/3	4	20.43	11.81	3.35	2.32	4.88	108	21.69	11.81	3.50	3.58	4.88	2.40	-	112
CHHM05-614□DBY-AV	1/2	4	22.05	10.35	4.49	3.82	5.83	117	23.74	10.35	5.59	5.51	5.83	3.66	4.17	123
CHHM08-614□DBY-AV	3/4	4	23.35	10.63	4.69	3.94	6.30	123	25.79	10.63	5.79	6.38	6.30	4.53	4.49	135
CHHM1-614□DBY-AV	1	4	23.35	10.63	4.69	3.94	6.30	123	25.79	10.63	5.79	6.38	6.30	4.53	4.49	135

Note: [1] 0 or 5 replaces □ depending on the model selected for the application. Please refer to the Gearmotor Selection Procedure and Tables in this section.

Dimensions shown are for reference only and are subject to change without notice, unless certified. Certified prints are available after receipt of an order; consult factory.

CHHM-613□DC~614□DB[1]-AV (con't.)

Metric (mm)[2]

Model CHHM	A	B	D	E	E1	F	F1	G	H	J	P	BW
613□DC	330	195	150	145	20	145	25	22	18	65	230	100
614□DB	330	195	150	145	20	145	25	22	18	65	230	120

Model CHHM	Low Speed Shaft				
	U h6	V	S	L1	Key
613□DC	50	70	M10	18	14 X 9 X 56
614□DB	50	90	M10	18	14 X 9 X 80

Model	Motor		Without Brake					Appx Wt (kg)	With Brake							Appx Wt (kg)
	kW	Pole	C	O	AB	L	MP		C	O	AB	L	MP	MS	MT	
CHHM02-613□DC-AV	0.2	4	513	300	85	59	124	51	545	300	89	91	124	61	-	53
CHHM03-613□DC-AV	0.25	4	513	300	85	59	124	51	545	300	89	91	124	61	-	53
CHHM05-613□DC-AV	0.4	4	554	263	114	97	148	55	597	263	142	140	148	93	106	58
CHHM08-613□DC-AV	0.55	4	554	263	114	97	148	55	597	263	142	140	148	93	106	58
CHHM1-613□DC-AV	0.75	4	587	270	119	100	160	59	649	270	147	162	160	115	114	64
CHHM1H-613□DC-AV	1.1	4	607	276	126	105	173	63	670	276	154	168	173	121	124	69
CHHM2-613□DC-AV	1.5	4	607	276	126	105	173	63	670	276	154	168	173	121	124	69
CHHM3-613□DC-AV	2.2	4	607	276	126	127	173	63	670	276	154	199	173	132	157	69
CHHM01-614□DB-AV	0.1	4	499	300	85	59	124	48	531	300	89	91	124	61	-	50
CHHM02-614□DB-AV	0.2	4	519	300	85	59	124	49	551	300	89	91	124	61	-	51
CHHM03-614□DB-AV	0.25	4	519	300	85	59	124	49	551	300	89	91	124	61	-	51
CHHM05-614□DB-AV	0.4	4	560	263	114	97	148	53	603	263	142	140	148	93	106	56
CHHM08-614□DB-AV	0.55	4	593	270	119	100	160	56	655	270	147	162	160	115	114	61
CHHM1-614□DB-AV	0.75	4	593	270	119	100	160	56	655	270	147	162	160	115	114	61

Notes: [1] 0 or 5 replaces □ depending on the model selected for the application. Please refer to the Gearmotor Selection Procedure and Tables in this section.
[2] The shaft dimensions shown above are hard metric sizes with metric keys. Units are available with shafting made to either DIN/ISO or JIS tolerances. Please consult factory for availability.

INVERTER DUTY, INTEGRAL FOOT MOUNT
DOUBLE REDUCTION

CHHM-616□DC~6225DB[1]-AV

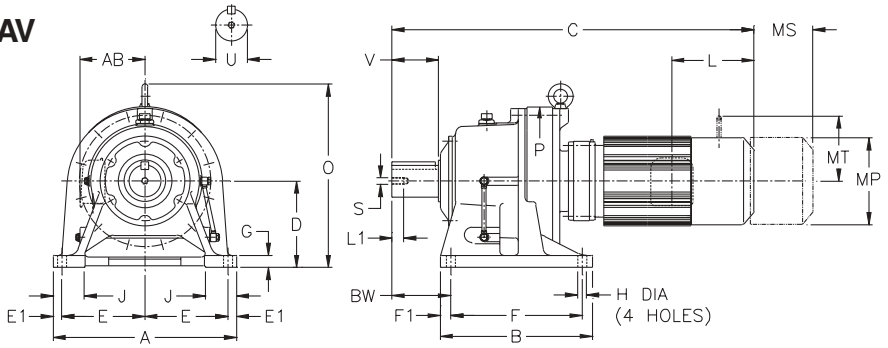

Inch (in)

Model CHHM	A	B	D	E	E1	F	F1	G	H	J	P	BW
616□DCY	16.14	9.37	6.299	7.28	0.79	5.91	1.73	0.98	0.71	2.95	11.81	5.47
617□DCY	16.93	13.19	7.874	7.48	0.98	10.83	1.18	1.18	0.87	3.15	13.39	4.92
618□DBY	18.50	14.96	8.661	8.27	0.98	12.60	1.18	1.18	0.87	3.35	14.57	5.71
619□DAY	20.87	17.32	9.843	9.45	0.98	14.96	1.18	1.38	1.02	3.54	16.93	6.69
619□DBY	20.87	17.32	9.843	9.45	0.98	14.96	1.18	1.38	1.02	3.54	16.93	6.69
6205DAY	20.87	17.32	9.843	8.66	1.77	14.17	1.57	1.38	1.02	3.94	17.64	8.46
6205DBY	20.87	17.32	9.843	8.66	1.77	14.17	1.57	1.38	1.02	3.94	17.64	8.46
6215DAY	22.83	18.70	10.433	9.45	1.97	15.55	1.57	1.57	1.02	4.33	19.09	8.27
6215DBY	22.83	18.70	10.433	9.45	1.97	15.55	1.57	1.57	1.02	4.33	19.09	8.27
6225DAY	24.41	20.47	11.024	10.63	1.57	16.54	1.97	1.57	1.30	4.53	20.71	9.06
6225DBY	24.41	20.47	11.024	10.63	1.57	16.54	1.97	1.57	1.30	4.53	20.71	9.06

Model CHHM	Low Speed Shaft				
	U*	V	S	L1	Key
616□DCY	2.250	3.54	3/8-16UNC	0.71	1/2 X 1/2 X 2.95
617□DCY	2.750	3.54	1/2-13UNC	0.94	5/8 X 5/8 X 3.15
618□DBY	3.125	4.33	1/2-13UNC	0.94	3/4 X 3/4 X 3.74
619□DAY	3.625	5.31	3/4-10UNC	1.34	7/8 X 7/8 X 4.92
619□DBY	3.625	5.31	3/4-10UNC	1.34	7/8 X 7/8 X 4.92
6205DAY	3.875	6.50	3/4-10UNC	1.34	1 X 1 X 6.50
6205DBY	3.875	6.50	3/4-10UNC	1.34	1 X 1 X 6.50
6215DAY	4.250	6.50	3/4-10UNC	1.34	1 X 1 X 6.50
6215DBY	4.250	6.50	3/4-10UNC	1.34	1 X 1 X 6.50
6225DAY	4.625	6.50	3/4-10UNC	1.34	1-1/4 X 7/8 X 6.5
6225DBY	4.625	6.50	3/4-10UNC	1.34	1-1/4 X 7/8 X 6.5

*** Shaft Tolerances:**

Shaft Nominal Diameter (inches)	Tolerances (inches)
2.000 (2) through 3.125 (3 1/8)	+0.0000/-0.0007
3.250 (3 1/4) through 4.625 (4 5/8)	+0.0000/-0.0009
4.750 (4 3/4) through 7.000 (7)	+0.0000/-0.0010

Model	Motor		Without Brake					Appx Wt (lb)	With Brake							Appx Wt (lb)
	HP	Pole	C	O	AB	L	MP		C	O	AB	L	MP	MS	MT	
CHHM05-616□DCY-AV	1/2	4	24.65	13.74	4.49	3.82	5.83	225	26.34	13.74	5.59	5.51	5.83	3.66	4.17	232
CHHM08-616□DCY-AV	3/4	4	25.94	13.74	4.69	3.94	6.30	234	28.39	13.74	5.79	6.38	6.30	4.53	4.49	245
CHHM1-616□DCY-AV	1	4	25.94	13.74	4.69	3.94	6.30	234	28.39	13.74	5.79	6.38	6.30	4.53	4.49	245
CHHM1H-616□DCY-AV	1.5	4	26.73	13.74	4.96	4.13	6.81	243	29.21	13.74	6.06	6.61	6.81	4.76	4.88	258
CHHM2-616□DCY-AV	2	4	26.73	13.74	4.96	4.13	6.81	243	29.21	13.74	6.06	6.61	6.81	4.76	4.88	258
CHHM3-616□DCY-AV	3	4	26.73	13.74	4.96	5.00	6.81	243	29.21	13.74	6.06	7.83	6.81	5.20	6.18	258
CHHM5-616□DCY-AV	5	4	27.64	13.74	5.79	5.00	8.35	265	30.47	13.74	6.69	7.83	8.35	5.20	6.18	287
CHHM8-616□DCY-AV	7.5	4	29.37	13.74	5.79	5.63	8.35	280	32.20	13.74	6.69	9.37	8.35	6.69	7.17	302
CHHM05-617□DCY-AV	1/2	4	26.50	16.38	4.49	3.82	5.83	300	28.19	16.38	5.59	5.51	5.83	3.66	4.17	306
CHHM08-617□DCY-AV	3/4	4	27.80	16.38	4.69	3.94	6.30	309	30.24	16.38	5.79	6.38	6.30	4.53	4.49	320
CHHM1-617□DCY-AV	1	4	27.80	16.38	4.69	3.94	6.30	309	30.24	16.38	5.79	6.38	6.30	4.53	4.49	320
CHHM1H-617□DCY-AV	1.5	4	28.58	16.38	4.96	4.13	6.81	318	31.06	16.38	6.06	6.61	6.81	4.76	4.88	333
CHHM2-617□DCY-AV	2	4	28.58	16.38	4.96	4.13	6.81	318	31.06	16.38	6.06	6.61	6.81	4.76	4.88	333
CHHM3-617□DCY-AV	3	4	28.58	16.38	4.96	5.00	6.81	318	31.06	16.38	6.06	7.83	6.81	5.20	6.18	333
CHHM5-617□DCY-AV	5	4	29.49	16.38	5.79	5.00	8.35	340	32.32	16.38	6.69	7.83	8.35	5.20	6.18	362
CHHM8-617□DCY-AV	7.5	4	31.22	16.38	5.79	5.63	8.35	355	34.06	16.38	6.69	9.37	8.35	6.69	7.17	377

Note: [1] 0 or 5 replaces □ depending on the model selected for the application. Please refer to the Gearmotor Selection Procedure and Tables in this section.

Dimensions shown are for reference only and are subject to change without notice, unless certified. Certified prints are available after receipt of an order; consult factory.

CHHM-616□DC~6225DB[1]-AV (con't.)

Inch (in)

Model	Motor		Without Brake					Appx Wt (lb)	With Brake							Appx Wt (lb)
	HP	Pole	C	O	AB	L	MP		C	O	AB	L	MP	MS	MT	
CHHM1-618□DBY-AV	1	4	30.16	17.76	4.69	3.94	6.30	426	32.60	17.76	5.79	6.38	6.30	4.53	4.49	437
CHHM1H-618□DBY-AV	1.5	4	30.94	17.76	4.96	5.00	6.81	432	33.43	17.76	6.06	7.83	6.81	5.20	6.18	448
CHHM2-618□DBY-AV	2	4	30.94	17.76	4.96	5.00	6.81	432	33.43	17.76	6.06	7.83	6.81	5.20	6.18	448
CHHM3-618□DBY-AV	3	4	30.94	17.76	4.96	5.00	6.81	432	33.43	17.76	6.06	7.83	6.81	5.20	6.18	448
CHHM5-618□DBY-AV	5	4	31.85	17.76	5.79	5.00	8.35	454	34.69	17.76	6.69	7.83	8.35	5.20	6.18	476
CHHM8-618□DBY-AV	7.5	4	33.58	17.76	5.79	5.63	8.35	470	36.42	17.76	6.69	9.37	8.35	6.69	7.17	492
CHHM10-618□DBY-AV	10	4	34.49	17.76	7.40	5.63	9.88	503	38.23	17.76	7.40	9.37	9.88	6.69	7.17	542
CHHM15-618□DBY-AV	15	4	36.85	17.76	7.40	11.61	9.88	534	40.59	17.76	7.40	15.16	9.88	8.66	-	573
CHHM1-619□DAY-AV	1	4	32.52	20.91	4.69	3.94	6.30	558	34.96	20.91	5.79	6.38	6.30	4.53	4.49	569
CHHM1H-619□DAY-AV	1.5	4	33.31	20.91	4.96	4.13	6.81	567	35.79	20.91	6.06	6.61	6.81	4.76	4.88	582
CHHM2-619□DAY-AV	2	4	33.31	20.91	4.96	4.13	6.81	567	35.79	20.91	6.06	6.61	6.81	4.76	4.88	582
CHHM3-619□DAY-AV	3	4	34.21	20.91	5.79	5.00	8.35	589	37.05	20.91	6.69	7.83	8.35	5.20	6.18	611
CHHM5-619□DAY-AV	5	4	35.94	20.91	5.79	5.00	8.35	604	38.78	20.91	6.69	7.83	8.35	5.20	6.18	626
CHHM5-619□DBY-AV	5	4	36.57	20.91	5.79	5.00	8.35	620	39.41	20.91	6.69	7.83	8.35	5.20	6.18	642
CHHM8-619□DBY-AV	7.5	4	37.48	20.91	7.40	5.63	9.88	653	41.22	20.91	7.40	9.37	9.88	6.69	7.17	692
CHHM10-619□DBY-AV	10	4	39.84	20.91	7.40	5.63	9.88	684	43.58	20.91	7.40	9.37	9.88	6.69	7.17	723
CHHM15-619□DBY-AV	15	4	43.39	20.91	9.13	11.61	12.76	798	46.93	20.91	9.13	15.16	12.76	8.66	-	871
CHHM1-6205DAY-AV	1	4	34.13	20.87	4.69	3.94	6.30	600	36.57	20.87	5.79	6.38	6.30	4.53	4.49	611
CHHM2-6205DAY-AV	2	4	34.92	20.87	4.96	4.13	6.81	609	37.36	20.87	6.06	6.61	6.81	4.76	4.88	624
CHHM3-6205DAY-AV	3	4	35.83	20.87	5.79	5.00	8.35	631	38.66	20.87	6.69	7.83	8.35	5.20	6.18	653
CHHM5-6205DAY-AV	5	4	37.56	20.87	5.79	5.00	8.35	646	40.39	20.87	6.69	7.83	8.35	5.20	6.18	668
CHHM3-6205DBY-AV	3	4	36.89	20.87	5.79	5.00	8.35	657	39.72	20.87	6.69	7.83	8.35	5.20	6.18	679
CHHM5-6205DBY-AV	5	4	38.62	20.87	5.79	5.00	8.35	673	41.46	20.87	6.69	7.83	8.35	5.20	6.18	695
CHHM8-6205DBY-AV	7.5	4	39.53	20.87	7.40	5.63	9.88	706	43.27	20.87	7.40	9.37	9.88	6.69	7.17	745
CHHM10-6205DBY-AV	10	4	41.89	20.87	7.40	5.63	9.88	734	45.63	20.87	7.40	9.37	9.88	6.69	7.17	774
CHHM15-6205DBY-AV	15	4	45.43	20.87	9.13	11.61	12.76	849	48.58	20.87	9.13	15.16	12.76	8.66	-	919
CHHM2-6215DAY-AV	2	4	37.01	22.64	4.96	4.13	6.81	814	39.49	22.64	6.06	6.61	6.81	4.76	4.88	829
CHHM3-6215DAY-AV	3	4	37.91	22.64	5.79	5.00	8.35	836	40.75	22.64	6.69	7.83	8.35	5.20	6.18	858
CHHM5-6215DAY-AV	5	4	39.65	22.64	5.79	5.00	8.35	851	42.48	22.64	6.69	7.83	8.35	5.20	6.18	873
CHHM8-6215DAY-AV	7.5	4	40.55	22.64	7.40	5.63	9.88	884	44.29	22.64	7.40	9.37	9.88	6.69	7.17	924
CHHM10-6215DAY-AV	10	4	42.91	22.64	7.40	5.63	9.88	913	46.65	22.64	7.40	9.37	9.88	6.69	7.17	953
CHHM15-6215DAY-AV	15	4	46.46	22.64	9.13	11.61	12.76	1028	50.00	22.64	9.13	15.16	12.76	8.66	-	1100
CHHM10-6215DBY-AV	10	4	44.09	22.64	7.40	5.63	9.88	959	47.83	22.64	7.40	9.37	9.88	6.69	7.17	997
CHHM15-6215DBY-AV	15	4	47.44	22.64	9.13	11.61	12.76	1076	50.98	22.64	9.13	15.16	12.76	8.66	-	1149
CHHM20-6215DBY-AV	20	4	51.18	22.64	11.69	13.39	15.51	1233	59.45	22.64	11.69	21.65	15.51	14.45	-	1345
CHHM25-6215DBY-AV	25	4	51.18	22.64	11.69	13.39	15.51	1233	59.45	22.64	11.69	21.65	15.51	14.45	-	1345
CHHM2-6225DAY-AV	2	4	38.66	24.02	4.96	4.13	6.81	977	41.14	24.02	6.06	6.61	6.81	4.76	4.88	992
CHHM3-6225DAY-AV	3	4	39.57	24.02	5.79	5.00	8.35	999	42.40	24.02	6.69	7.83	8.35	5.20	6.18	1021
CHHM5-6225DAY-AV	5	4	41.30	24.02	5.79	5.00	8.35	1014	44.13	24.02	6.69	7.83	8.35	5.20	6.18	1036
CHHM8-6225DAY-AV	7.5	4	42.20	24.02	7.40	5.63	9.88	1047	45.94	24.02	7.40	9.37	9.88	6.69	7.17	1087
CHHM10-6225DAY-AV	10	4	44.57	24.02	7.40	5.63	9.88	1078	48.31	24.02	7.40	9.37	9.88	6.69	7.17	1118
CHHM15-6225DAY-AV	15	4	48.11	24.02	9.13	11.61	12.76	1193	51.65	24.02	9.13	15.16	12.76	8.66	-	1266
CHHM10-6225DBY-AV	10	4	46.65	24.02	7.40	5.63	9.88	1177	50.39	24.02	7.40	9.37	9.88	6.69	7.17	1217
CHHM15-6225DBY-AV	15	4	49.80	24.02	9.13	11.61	12.76	1297	53.35	24.02	9.13	15.16	12.76	8.66	-	1369
CHHM20-6225DBY-AV	20	4	53.54	24.02	11.69	13.39	15.51	1446	61.81	24.02	11.69	21.65	15.51	14.45	-	1559
CHHM25-6225DBY-AV	25	4	53.54	24.02	11.69	13.39	15.51	1446	61.81	24.02	11.69	21.65	15.51	14.45	-	1559
CHHM30-6225DBY-AV	30	4	53.54	24.02	11.69	13.39	15.51	1484	61.81	24.02	11.69	21.65	15.51	14.57	-	1596

Note: [1] 0 or 5 replaces □ depending on the model selected for the application. Please refer to the Gearmotor Selection Procedure and Tables in this section.

Dimensions shown are for reference only and are subject to change without notice, unless certified.
Certified prints are available after receipt of an order; consult factory.

INVERTER DUTY, INTEGRAL FOOT MOUNT
DOUBLE REDUCTION

CHHM-616□DC~6225DB[1]-AV

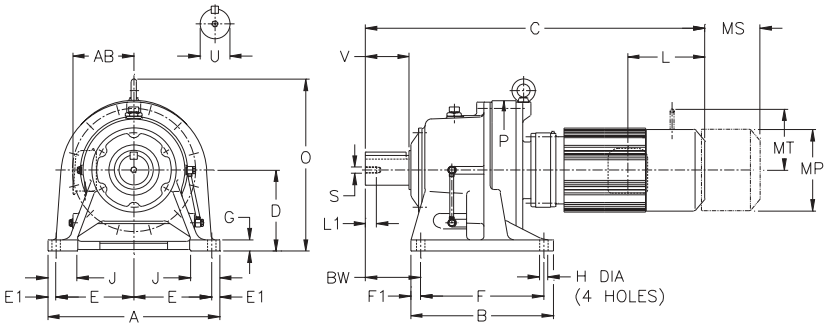

Metric (mm)[2]

Model CHHM	A	B	D	E	E1	F	F1	G	H	J	P	BW
616□DC	410	238	160	185	20	150	44	25	18	75	300	139
617□DC	430	335	200	190	25	275	30	30	22	80	340	125
618□DB	470	380	220	210	25	320	30	30	22	85	370	145
619□DA	530	440	250	240	25	380	30	35	26	90	430	170
619□DB	530	440	250	240	25	380	30	35	26	90	430	170
6205DA	530	440	250	220	45	360	40	35	26	100	448	215
6205DB	530	440	250	220	45	360	40	35	26	100	448	215
6215DA	580	475	265	240	50	395	40	40	26	110	485	210
6215DB	580	475	265	240	50	395	40	40	26	110	485	210
6225DA	620	520	280	270	40	420	50	40	33	115	526	230
6225DB	620	520	280	270	40	420	50	40	33	115	526	230

Model CHHM	Low Speed Shaft				
	U h6	V	S	L1	Key
616□DC	60	90	M10	18	18 X 11 X 80
617□DC	70	90	M12	24	20 X 12 X 80
618□DB	80	110	M12	24	22 X 14 X 100
619□DA	95	135	M20	34	25 X 14 X 125
619□DB	95	135	M20	34	25 X 14 X 125
6205DA	100	165	M20	34	28 X 16 X 165
6205DB	100	165	M20	34	28 X 16 X 165
6215DA	110	165	M20	34	28 X 16 X 165
6215DB	110	165	M20	34	28 X 16 X 165
6225DA	120	165	M20	34	32 X 18 X 165
6225DB	120	165	M20	34	32 X 18 X 165

Model	Motor		Without Brake					Appx Wt (kg)	With Brake							Appx Wt (kg)
	kW	Pole	C	O	AB	L	MP		C	O	AB	L	MP	MS	MT	
CHHM05-616□DC-AV	0.4	4	626	349	114	97	148	102	669	349	142	140	148	93	106	105
CHHM08-616□DC-AV	0.55	4	659	349	119	100	160	106	721	349	147	162	160	115	114	111
CHHM1-616□DC-AV	0.75	4	659	349	119	100	160	106	721	349	147	162	160	115	114	111
CHHM1H-616□DC-AV	1.1	4	679	349	126	105	173	110	742	349	154	168	173	121	124	117
CHHM2-616□DC-AV	1.5	4	679	349	126	105	173	110	742	349	154	168	173	121	124	117
CHHM3-616□DC-AV	2.2	4	679	349	126	127	173	110	742	349	154	199	173	132	157	117
CHHM5-616□DC-AV	3.7	4	702	349	147	127	212	120	774	349	170	199	212	132	157	130
CHHM8-616□DC-AV	5.5	4	746	349	147	143	212	127	818	349	170	238	212	170	182	137
CHHM05-617□DC-AV	0.4	4	673	416	114	97	148	136	716	416	142	140	148	93	106	139
CHHM08-617□DC-AV	0.55	4	706	416	119	100	160	140	768	416	147	162	160	115	114	145
CHHM1-617□DC-AV	0.75	4	706	416	119	100	160	140	768	416	147	162	160	115	114	145
CHHM1H-617□DC-AV	1.1	4	726	416	126	105	173	144	789	416	154	168	173	121	124	151
CHHM2-617□DC-AV	1.5	4	726	416	126	105	173	144	789	416	154	168	173	121	124	151
CHHM3-617□DC-AV	2.2	4	726	416	126	127	173	144	789	416	154	199	173	132	157	151
CHHM5-617□DC-AV	3.7	4	749	416	147	127	212	154	821	416	170	199	212	132	157	164
CHHM8-617□DC-AV	5.5	4	793	416	147	143	212	161	865	416	170	238	212	170	182	171

Notes: [1] 0 or 5 replaces □ depending on the model selected for the application. Please refer to the Gearmotor Selection Procedure and Tables in this section.
[2] The shaft dimensions shown above are hard metric sizes with metric keys. Units are available with shafting made to either DIN/ISO or JIS tolerances. Please consult factory for availability.

Dimensions shown are for reference only and are subject to change without notice, unless certified.
Certified prints are available after receipt of an order; consult factory.

CHHM-616□DC~6225DB[1]-AV (con't.)

Metric (mm)

Model	Motor		Without Brake					Appx Wt (kg)	With Brake							Appx Wt (kg)
	kW	Pole	C	O	AB	L	MP		C	O	AB	L	MP	MS	MT	
CHHM1-618□DB-AV	0.75	4	766	451	119	100	160	193	828	451	147	162	160	115	114	198
CHHM1H-618□DB-AV	1.1	4	786	451	126	127	173	196	849	451	154	199	173	132	157	203
CHHM2-618□DB-AV	1.5	4	786	451	126	127	173	196	849	451	154	199	173	132	157	203
CHHM3-618□DB-AV	2.2	4	786	451	126	127	173	196	849	451	154	199	173	132	157	203
CHHM5-618□DB-AV	3.7	4	809	451	147	127	212	206	881	451	170	199	212	132	157	216
CHHM8-618□DB-AV	5.5	4	853	451	147	143	212	213	925	451	170	238	212	170	182	223
CHHM10-618□DB-AV	7.5	4	876	451	188	143	251	228	971	451	188	238	251	170	182	246
CHHM15-618□DB-AV	11	4	936	451	188	295	251	242	1031	451	188	385	251	220	-	260
CHHM1-619□DA-AV	0.75	4	826	531	119	100	160	253	888	531	147	162	160	115	114	258
CHHM1H-619□DA-AV	1.1	4	846	531	126	105	173	257	909	531	154	168	173	121	124	264
CHHM2-619□DA-AV	1.5	4	846	531	126	105	173	257	909	531	154	168	173	121	124	264
CHHM3-619□DA-AV	2.2	4	869	531	147	127	212	267	941	531	170	199	212	132	157	277
CHHM5-619□DA-AV	3.7	4	913	531	147	127	212	274	985	531	170	199	212	132	157	284
CHHM5-619□DB-AV	3.7	4	929	531	147	127	212	281	1001	531	170	199	212	132	157	291
CHHM8-619□DB-AV	5.5	4	952	531	188	143	251	296	1047	531	188	238	251	170	182	314
CHHM10-619□DB-AV	7.5	4	1012	531	188	143	251	310	1107	531	188	238	251	170	182	328
CHHM15-619□DB-AV	11	4	1102	531	232	295	324	362	1192	531	232	385	324	220	-	395
CHHM1-6205DA-AV	0.75	4	867	530	119	100	160	272	929	530	147	162	160	115	114	277
CHHM2-6205DA-AV	1.5	4	887	530	126	105	173	276	949	530	154	168	173	121	124	283
CHHM3-6205DA-AV	2.2	4	910	530	147	127	212	286	982	530	170	199	212	132	157	296
CHHM5-6205DA-AV	3.7	4	954	530	147	127	212	293	1026	530	170	199	212	132	157	303
CHHM3-6205DB-AV	2.2	4	937	530	147	127	212	298	1009	530	170	199	212	132	157	308
CHHM5-6205DB-AV	3.7	4	981	530	147	127	212	305	1053	530	170	199	212	132	157	315
CHHM8-6205DB-AV	5.5	4	1004	530	188	143	251	320	1099	530	188	238	251	170	182	338
CHHM10-6205DB-AV	7.5	4	1064	530	188	143	251	333	1159	530	188	238	251	170	182	351
CHHM15-6205DB-AV	11	4	1154	530	232	295	324	385	1234	530	232	385	324	220	-	417
CHHM2-6215DA-AV	1.5	4	940	575	126	105	173	369	1003	575	154	168	173	121	124	376
CHHM3-6215DA-AV	2.2	4	963	575	147	127	212	379	1035	575	170	199	212	132	157	389
CHHM5-6215DA-AV	3.7	4	1007	575	147	127	212	386	1079	575	170	199	212	132	157	396
CHHM8-6215DA-AV	5.5	4	1030	575	188	143	251	401	1125	575	188	238	251	170	182	419
CHHM10-6215DA-AV	7.5	4	1090	575	188	143	251	414	1185	575	188	238	251	170	182	432
CHHM15-6215DA-AV	11	4	1180	575	232	295	324	466	1270	575	232	385	324	220	-	499
CHHM10-6215DB-AV	7.5	4	1120	575	188	143	251	435	1215	575	188	238	251	170	182	452
CHHM15-6215DB-AV	11	4	1205	575	232	295	324	488	1295	575	232	385	324	220	-	521
CHHM20-6215DB-AV	15	4	1300	575	297	340	394	559	1510	575	297	550	394	367	-	610
CHHM25-6215DB-AV	18.5	4	1300	575	297	340	394	559	1510	575	297	550	394	367	-	610
CHHM2-6225DA-AV	1.5	4	982	610	126	105	173	443	1045	610	154	168	173	121	124	450
CHHM3-6225DA-AV	2.2	4	1005	610	147	127	212	453	1077	610	170	199	212	132	157	463
CHHM5-6225DA-AV	3.7	4	1049	610	147	127	212	460	1121	610	170	199	212	132	157	470
CHHM8-6225DA-AV	5.5	4	1072	610	188	143	251	475	1167	610	188	238	251	170	182	493
CHHM10-6225DA-AV	7.5	4	1132	610	188	143	251	489	1227	610	188	238	251	170	182	507
CHHM15-6225DA-AV	11	4	1222	610	232	295	324	541	1312	610	232	385	324	220	-	574
CHHM10-6225DB-AV	7.5	4	1185	610	188	143	251	534	1280	610	188	238	251	170	182	552
CHHM15-6225DB-AV	11	4	1265	610	232	295	324	588	1355	610	232	385	324	220	-	621
CHHM20-6225DB-AV	15	4	1360	610	297	340	394	656	1570	610	297	550	394	367	-	707
CHHM25-6225DB-AV	18.5	4	1360	610	297	340	394	656	1570	610	297	550	394	367	-	707
CHHM30-6225DB-AV	22	4	1360	610	297	340	394	673	1570	610	297	550	394	370	-	724

Note: [1] 0 or 5 replaces □ depending on the model selected for the application. Please refer to the Gearmotor Selection Procedure and Tables in this section.

Dimensions shown are for reference only and are subject to change without notice, unless certified.
Certified prints are available after receipt of an order; consult factory.

INVERTER DUTY, INTEGRAL FOOT MOUNT
DOUBLE REDUCTION

CHHM-6235DA~6275DA-AV

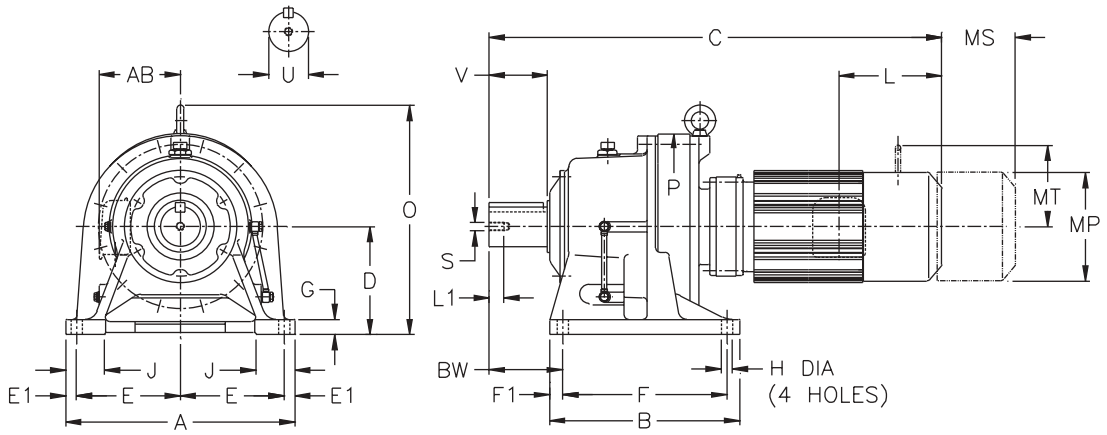

Inch (in)

Model CHHM	A	B	D	E	E1	F	F1	G	H	J	P	BW
6235DAY	26.38	22.05	11.811	11.42	1.77	18.11	1.97	1.77	1.30	4.72	22.13	10.24
6235DBY	26.38	22.05	11.811	11.42	1.77	18.11	1.97	1.77	1.30	4.72	22.13	10.24
6245DAY	28.35	22.83	13.189	12.40	1.77	18.90	1.97	1.77	1.54	5.04	24.17	10.35
6245DBY	28.35	22.83	13.189	12.40	1.77	18.90	1.97	1.77	1.54	5.04	24.17	10.35
6255DAY	30.71	24.80	14.764	13.19	2.17	20.47	2.17	1.97	1.54	5.51	26.38	12.60
6255DBY	30.71	24.80	14.764	13.19	2.17	20.47	2.17	1.97	1.54	5.51	26.38	12.60
6265DAY	34.65	27.56	15.748	15.16	2.17	23.23	2.17	2.17	1.77	6.30	28.98	15.35
6275DAY	45.67	40.94	21.260	20.67	2.17	16.54	3.94	2.36	1.77	7.87	37.40	19.09

Model CHHM	Low Speed Shaft				
	U*	V	S	L1	Key
6235DAY	5.000	7.87	1-8UNC	1.61	1-1/4 X 7/8 X 7.87
6235DBY	5.000	7.87	1-8UNC	1.61	1-1/4 X 7/8 X 7.87
6245DAY	5.500	7.87	1-8UNC	1.61	1-1/4 X 7/8 X 7.87
6245DBY	5.500	7.87	1-8UNC	1.61	1-1/4 X 7/8 X 7.87
6255DAY	6.250	9.45	1-1/4-7UNC	1.93	1-1/2 X 1 X 9.45
6255DBY	6.250	9.45	1-1/4-7UNC	1.93	1-1/2 X 1 X 9.45
6265DAY	6.625	11.81	1-1/4-7UNC	1.93	1-3/4 X 1-1/4 X 11.8
6275DAY	7.000	13.00	1-1/4-7UNC	2.05	1-3/4 X 1-1/4 X 13

*** Shaft Tolerances:**

Shaft Nominal Diameter (inches)	Tolerances (inches)
2.000 (2) through 3.125 (3 1/8)	+0.0000/-0.0007
3.250 (3 1/4) through 4.625 (4 5/8)	+0.0000/-0.0009
4.750 (4 3/4) through 7.000 (7)	+0.0000/-0.0010

Dimensions shown are for reference only and are subject to change without notice, unless certified.
Certified prints are available after receipt of an order; consult factory.

CHHM-6235DA~6275DA-AV (con't.)

Inch (in)

Model	Motor		Without Brake					Appx Wt (lb)	With Brake							Appx Wt (lb)
	HP	Pole	C	O	AB	L	MP		C	O	AB	L	MP	MS	MT	
CHHM3-6235DAY-AV	3	4	42.95	26.26	5.79	5.00	8.35	1255	45.79	26.26	6.69	7.83	8.35	5.20	6.18	1277
CHHM5-6235DAY-AV	5	4	44.69	26.26	5.79	5.00	8.35	1270	47.52	26.26	6.69	7.83	8.35	5.20	6.18	1292
CHHM8-6235DAY-AV	7.5	4	45.79	26.26	7.40	5.63	9.88	1305	49.53	26.26	7.40	9.37	9.88	6.69	7.17	1343
CHHM10-6235DAY-AV	10	4	48.15	26.26	7.40	5.63	9.88	1336	51.89	26.26	7.40	9.37	9.88	6.69	7.17	1374
CHHM15-6235DAY-AV	15	4	51.50	26.26	9.13	11.61	12.76	1453	55.04	26.26	9.13	15.16	12.76	8.66	-	1526
CHHM20-6235DAY-AV	20	4	55.24	26.26	11.69	13.39	15.51	1614	63.50	26.26	11.69	21.65	15.51	14.45	-	1727
CHHM25-6235DAY-AV	25	4	55.24	26.26	11.69	13.39	15.51	1614	63.50	26.26	11.69	21.65	15.51	14.45	-	1727
CHHM40-6235DBY-AV	40	4	60.63	26.26	11.69	18.11	15.51	1797	69.09	26.26	11.69	25.39	15.51	17.52	-	2011
CHHM3-6245DAY-AV	3	4	44.45	28.70	5.79	5.00	8.35	1495	47.28	28.70	6.69	7.83	8.35	5.20	6.18	1517
CHHM5-6245DAY-AV	5	4	46.18	28.70	5.79	5.00	8.35	1510	49.02	28.70	6.69	7.83	8.35	5.20	6.18	1532
CHHM8-6245DAY-AV	7.5	4	47.28	28.70	7.40	5.63	9.88	1546	51.02	28.70	7.40	9.37	9.88	6.69	7.17	1583
CHHM10-6245DAY-AV	10	4	49.65	28.70	7.40	5.63	9.88	1577	53.39	28.70	7.40	9.37	9.88	6.69	7.17	1614
CHHM15-6245DAY-AV	15	4	52.99	28.70	9.13	11.61	12.76	1693	56.54	28.70	9.13	15.16	12.76	8.66	-	1766
CHHM20-6245DAY-AV	20	4	56.73	28.70	11.69	13.39	15.51	1841	65.00	28.70	11.69	21.65	15.51	14.45	-	1954
CHHM25-6245DAY-AV	25	4	56.73	28.70	11.69	13.39	15.51	1841	65.00	28.70	11.69	21.65	15.51	14.45	-	1954
CHHM20-6245DBY-AV	20	4	57.56	28.70	11.69	13.39	15.51	1899	65.83	28.70	11.69	21.65	15.51	14.45	-	2011
CHHM30-6245DBY-AV	30	4	57.56	28.70	11.69	13.39	15.51	1936	65.83	28.70	11.69	21.65	15.51	14.57	-	2031
CHHM40-6245DBY-AV	40	4	62.09	28.70	11.69	18.11	15.51	2051	70.55	28.70	11.69	28.03	15.51	17.52	-	2265
CHHM5-6255DAY-AV	5	4	52.28	32.09	5.79	5.00	8.35	2293	55.12	32.09	6.69	9.37	8.35	5.20	6.18	2315
CHHM8-6255DAY-AV	7.5	4	52.99	32.09	7.40	5.63	9.88	2326	56.73	32.09	7.40	9.37	9.88	6.69	7.17	2359
CHHM10-6255DAY-AV	10	4	55.35	32.09	7.40	5.63	9.88	2359	59.09	32.09	7.40	9.37	9.88	6.69	7.17	2392
CHHM15-6255DAY-AV	15	4	58.50	32.09	9.13	11.61	12.76	2470	62.05	32.09	9.13	15.16	12.76	8.66	-	2547
CHHM20-6255DAY-AV	20	4	62.24	32.09	11.69	13.39	15.51	2624	70.51	32.09	11.69	21.65	15.51	14.45	-	2736
CHHM25-6255DAY-AV	25	4	62.24	32.09	11.69	13.39	15.51	2624	70.51	32.09	11.69	21.65	15.51	14.45	-	2736
CHHM30-6255DAY-AV	30	4	62.24	32.09	11.69	13.39	15.51	2668	70.51	32.09	11.69	21.65	15.51	14.57	-	2763
CHHM25-6255DBY-AV	25	4	63.11	32.09	11.69	13.39	15.51	2789	71.38	32.09	11.69	21.65	15.51	14.45	-	2902
CHHM30-6255DBY-AV	30	4	63.11	32.09	11.69	13.39	15.51	2822	71.38	32.09	11.69	21.65	15.51	14.57	-	2917
CHHM40-6255DBY-AV	40	4	67.64	32.09	11.69	18.11	15.51	2906	75.91	32.09	11.69	28.03	15.51	17.52	-	3120
CHHM50-6255DBY-AV	50	4	67.64	32.09	11.69	18.11	15.51	2906	75.91	32.09	11.69	28.03	15.51	-	-	3120
CHHM8-6265DAY-AV	7.5	4	58.78	34.41	7.40	5.63	9.88	3043	62.52	34.41	7.40	9.37	9.88	6.69	7.17	3087
CHHM10-6265DAY-AV	10	4	61.14	34.41	7.40	5.63	9.88	3076	64.88	34.41	7.40	9.37	9.88	6.69	7.17	3109
CHHM15-6265DAY-AV	15	4	63.70	34.41	9.13	11.61	12.76	3186	67.24	34.41	9.13	15.16	12.76	8.66	-	3263
CHHM20-6265DAY-AV	20	4	67.44	34.41	11.69	13.39	15.51	3352	75.71	34.41	11.69	21.65	15.51	14.45	-	3451
CHHM25-6265DAY-AV	25	4	67.44	34.41	11.69	13.39	15.51	3352	75.71	34.41	11.69	21.65	15.51	14.45	-	3451
CHHM30-6265DAY-AV	30	4	67.44	34.41	11.69	13.39	15.51	3385	75.71	34.41	11.69	21.65	15.51	14.57	-	3479
CHHM40-6265DAY-AV	40	4	71.97	34.41	11.69	18.11	15.51	3462	80.43	34.41	11.69	28.03	15.51	17.52	-	3676
CHHM50-6265DAY-AV	50	4	71.97	34.41	11.69	18.11	15.51	3462	80.43	34.41	11.69	28.03	15.51	-	-	3676
CHHM10-6275DAY-AV	10	4	71.42	45.71	7.40	5.63	9.88	5579	75.16	45.71	7.40	9.37	9.88	6.69	7.17	5612
CHHM15-6275DAY-AV	15	4	73.98	45.71	9.13	11.61	12.76	5689	77.52	45.71	9.13	15.16	12.76	8.66	-	5766
CHHM20-6275DAY-AV	20	4	77.72	45.71	11.69	13.39	15.51	5854	85.98	45.71	11.69	21.65	15.51	14.45	-	5954
CHHM25-6275DAY-AV	25	4	77.72	45.71	11.69	13.39	15.51	5854	85.98	45.71	11.69	21.65	15.51	14.45	-	5954
CHHM30-6275DAY-AV	30	4	77.72	45.71	11.69	13.39	15.51	5887	85.98	45.71	11.69	21.65	15.51	14.57	-	5982
CHHM40-6275DAY-AV	40	4	82.24	45.71	11.69	18.11	15.51	5971	90.71	45.71	11.69	28.03	15.51	17.52	-	6185
CHHM50-6275DAY-AV	50	4	82.24	45.71	11.69	18.11	15.51	5971	90.71	45.71	11.69	28.03	15.51	-	-	6185

Dimensions shown are for reference only and are subject to change without notice, unless certified.
Certified prints are available after receipt of an order; consult factory.

INVERTER DUTY, INTEGRAL FOOT MOUNT
DOUBLE REDUCTION

CHHM-6235DA~6275DA-AV

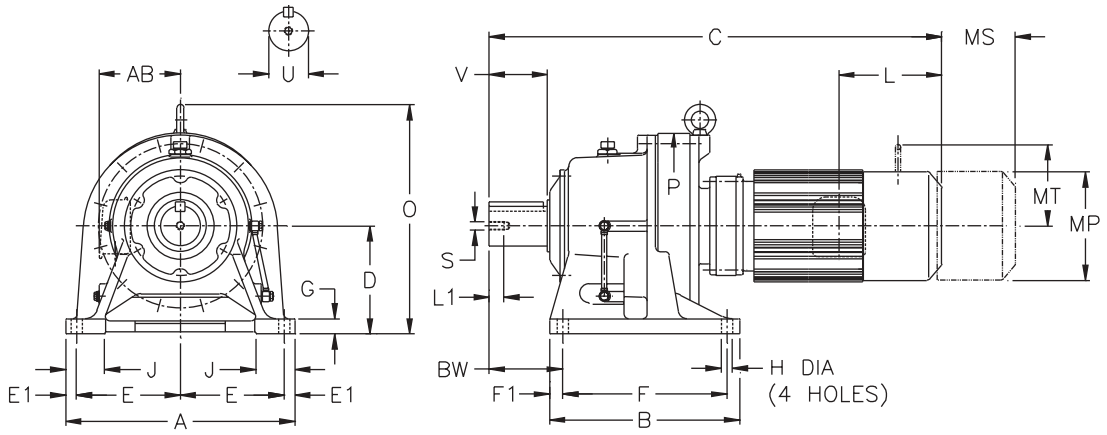

Metric (mm)[1]

Model CHHM	A	B	D	E	E1	F	F1	G	H	J	P	BW
6235DA	670	560	300	290	45	460	50	45	33	120	562	260
6235DB	670	560	300	290	45	460	50	45	33	120	562	260
6245DA	720	580	335	315	45	480	50	45	39	128	614	263
6245DB	720	580	335	315	45	480	50	45	39	128	614	263
6255DA	780	630	375	335	55	520	55	50	39	140	670	320
6255DB	780	630	375	335	55	520	55	50	39	140	670	320
6265DA	880	700	400	385	55	590	55	55	45	160	736	390
6275DA	1160	1040	540	525	55	420	100	60	45	200	950	485

Model CHHM	Low Speed Shaft				
	U h6	V	S	L1	Key
6235DA	130	200	M24	41	32 X 18 X 200
6235DB	130	200	M24	41	32 X 18 X 200
6245DA	140	200	M24	41	36 X 20 X 200
6245DB	140	200	M24	41	36 X 20 X 200
6255DA	160	240	M30	49	40 X 22 X 240
6255DB	160	240	M30	49	40 X 22 X 240
6265DA	170	300	M30	49	40 X 22 X 300
6275DA	180	330	M30	52	45 X 25 X 330

Notes: [1] The shaft dimensions shown above are hard metric sizes with metric keys. Units are available with shafting made to either DIN/ISO or JIS tolerances. Please consult factory for availability.

Dimensions shown are for reference only and are subject to change without notice, unless certified. Certified prints are available after receipt of an order; consult factory.

CHHM-6235DA~6275DA-AV (con't.)

Metric (mm)

Model	Motor		Without Brake					Appx Wt (kg)	With Brake							Appx Wt (kg)
	kW	Pole	C	O	AB	L	MP		C	O	AB	L	MP	MS	MT	
CHHM3-6235DA-AV	2.2	4	1091	667	147	127	212	569	1163	667	170	199	212	132	157	579
CHHM5-6235DA-AV	3.7	4	1135	667	147	127	212	576	1207	667	170	199	212	132	157	586
CHHM8-6235DA-AV	5.5	4	1163	667	188	143	251	592	1258	667	188	238	251	170	182	609
CHHM10-6235DA-AV	7.5	4	1223	667	188	143	251	606	1318	667	188	238	251	170	182	623
CHHM15-6235DA-AV	11	4	1308	667	232	295	324	659	1398	667	232	385	324	220	-	692
CHHM20-6235DA-AV	15	4	1403	667	297	340	394	732	1613	667	297	550	394	367	-	783
CHHM25-6235DA-AV	18.5	4	1403	667	297	340	394	732	1613	667	297	550	394	367	-	783
CHHM40-6235DB-AV	30	4	1540	667	297	460	394	815	1755	667	297	645	394	445	-	912
CHHM3-6245DA-AV	2.2	4	1129	729	147	127	212	678	1201	729	170	199	212	132	157	688
CHHM5-6245DA-AV	3.7	4	1173	729	147	127	212	685	1245	729	170	199	212	132	157	695
CHHM8-6245DA-AV	5.5	4	1201	729	188	143	251	701	1296	729	188	238	251	170	182	718
CHHM10-6245DA-AV	7.5	4	1261	729	188	143	251	715	1356	729	188	238	251	170	182	732
CHHM15-6245DA-AV	11	4	1346	729	232	295	324	768	1436	729	232	385	324	220	-	801
CHHM20-6245DA-AV	15	4	1441	729	297	340	394	835	1651	729	297	550	394	367	-	886
CHHM25-6245DA-AV	18.5	4	1441	729	297	340	394	835	1651	729	297	550	394	367	-	886
CHHM20-6245DB-AV	15	4	1462	729	297	340	394	861	1672	729	297	550	394	367	-	912
CHHM30-6245DB-AV	22	4	1462	729	297	340	394	878	1672	729	297	550	394	370	-	921
CHHM40-6245DB-AV	30	4	1577	729	297	460	394	930	1792	729	297	712	394	445	-	1027
CHHM5-6255DA-AV	3.7	4	1328	815	147	127	212	1040	1400	815	170	238	212	132	157	1050
CHHM8-6255DA-AV	5.5	4	1346	815	188	143	251	1055	1441	815	188	238	251	170	182	1070
CHHM10-6255DA-AV	7.5	4	1406	815	188	143	251	1070	1501	815	188	238	251	170	182	1085
CHHM15-6255DA-AV	11	4	1486	815	232	295	324	1120	1576	815	232	385	324	220	-	1155
CHHM20-6255DA-AV	15	4	1581	815	297	340	394	1190	1791	815	297	550	394	367	-	1241
CHHM25-6255DA-AV	18.5	4	1581	815	297	340	394	1190	1791	815	297	550	394	367	-	1241
CHHM30-6255DA-AV	22	4	1581	815	297	340	394	1210	1791	815	297	550	394	370	-	1253
CHHM25-6255DB-AV	18.5	4	1603	815	297	340	394	1265	1813	815	297	550	394	367	-	1316
CHHM30-6255DB-AV	22	4	1603	815	297	340	394	1280	1813	815	297	550	394	370	-	1323
CHHM40-6255DB-AV	30	4	1718	815	297	460	394	1318	1928	815	297	712	394	445	-	1415
CHHM50-6255DB-AV	37	4	1718	815	297	460	394	1318	1928	815	297	712	394	-	-	1415
CHHM8-6265DA-AV	5.5	4	1493	874	188	143	251	1380	1588	874	188	238	251	170	182	1400
CHHM10-6265DA-AV	7.5	4	1553	874	188	143	251	1395	1648	874	188	238	251	170	182	1410
CHHM15-6265DA-AV	11	4	1618	874	232	295	324	1445	1708	874	232	385	324	220	-	1480
CHHM20-6265DA-AV	15	4	1713	874	297	340	394	1520	1923	874	297	550	394	367	-	1565
CHHM25-6265DA-AV	18.5	4	1713	874	297	340	394	1520	1923	874	297	550	394	367	-	1565
CHHM30-6265DA-AV	22	4	1713	874	297	340	394	1535	1923	874	297	550	394	370	-	1578
CHHM40-6265DA-AV	30	4	1828	874	297	460	394	1570	2043	874	297	712	394	445	-	1667
CHHM50-6265DA-AV	37	4	1828	874	297	460	394	1570	2043	874	297	712	394	-	-	1667
CHHM10-6275DA-AV	7.5	4	1814	1161	188	143	251	2530	1909	1161	188	238	251	170	182	2545
CHHM15-6275DA-AV	11	4	1879	1161	232	295	324	2580	1969	1161	232	385	324	220	-	2615
CHHM20-6275DA-AV	15	4	1974	1161	297	340	394	2655	2184	1161	297	550	394	367	-	2700
CHHM25-6275DA-AV	18.5	4	1974	1161	297	340	394	2655	2184	1161	297	550	394	367	-	2700
CHHM30-6275DA-AV	22	4	1974	1161	297	340	394	2670	2184	1161	297	550	394	370	-	2713
CHHM40-6275DA-AV	30	4	2089	1161	297	460	394	2708	2304	1161	297	712	394	445	-	2805
CHHM50-6275DA-AV	37	4	2089	1161	297	460	394	2708	2304	1161	297	712	394	-	-	2805

Dimensions shown are for reference only and are subject to change without notice, unless certified.
Certified prints are available after receipt of an order; consult factory.

INTEGRAL UNIVERSAL V-FLANGE MOUNT
SINGLE REDUCTION

CNVM-606□~612□[1]

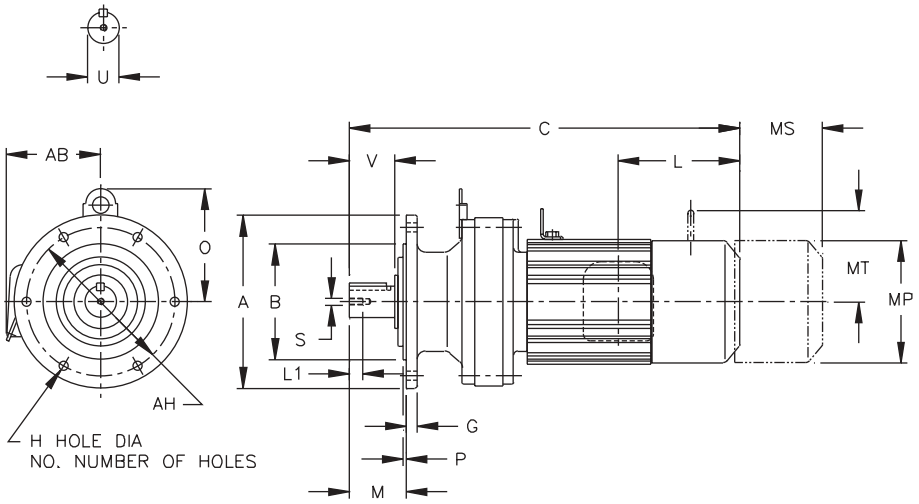

Inch (in)

Model CNVM	A	B	G	H	No.	M	O	P	AH
606□Y	4.72	3.1484 3.1466	0.31	0.35	6	1.34	-	0.12	4.02
607□Y	6.30	4.3293 4.3272	0.35	0.43	4	1.65	-	0.12	5.28
608□Y	6.30	4.3293 4.3272	0.35	0.43	4	1.89	-	0.12	5.28
609□Y	6.30	4.3293 4.3272	0.35	0.43	4	1.89	4.21	0.12	5.28
610□Y	6.30	4.3293 4.3272	0.35	0.43	4	1.89	4.21	0.12	5.28
611□Y	8.27	5.5101 5.5076	0.43	0.43	6	2.28	4.57	0.16	7.09
612□Y	8.27	5.5101 5.5076	0.51	0.43	6	2.72	5.39	0.16	7.09

Model CNVM	LOW SPEED SHAFT				
	U*	V	S	L1	KEY
606□Y	0.500	0.98	10-32UNF	0.63	1/8 X 1/8 X 0.79
607□Y	0.750	1.18	12-28UNF	0.63	3/16 X 3/16 X 1.06
608□Y	0.875	1.38	12-28UNF	0.63	3/16 X 3/16 X 1.18
609□Y	1.125	1.38	5/16-18UNC	0.79	1/4 X 1/4 X 1.18
610□Y	1.125	1.38	5/16-18UNC	0.79	1/4 X 1/4 X 1.18
611□Y	1.250	1.77	5/16-18UNC	0.79	1/4 X 1/4 X 1.46
612□Y	1.500	2.165	5/16-18UNC	0.79	3/8 X 3/8 X 1.77

Note: [1] 0 or 5 replaces □ depending on the model selected for the application. Please refer to the Gearmotor Selection Procedure and Tables in this section.

*** Shaft Tolerances:**

Shaft Nominal Diameter (inches)	Tolerances (inches)
0.500 (1/2) through 0.625 (5/8)	+0.0000/-0.0004
0.750 (3/4) through 1.125 (1 1/8)	+0.0000/-0.0005
1.25 (1 1/4) through 1.875 (1 7/8)	+0.0000/-0.0006

Dimensions shown are for reference only and are subject to change without notice, unless certified. Certified prints are available after receipt of an order; consult factory.

CNVM-606□~612□[1] (con't.)

Inch (in)

Model	Motor		Without Brake				Appx Wt (lb)	With Brake						Appx Wt (lb)
	HP	Pole	C	AB	L	MP		C	AB	L	MP	MS	MT	
CNVM01-606□Y	1/8	4	8.90	3.35	1.38	4.69	13	10.28	3.50	2.76	4.88	1.93	-	18
CNVM02-606□Y	1/4	4	10.55	3.35	2.32	4.88	15	11.81	3.50	3.58	4.88	2.40	-	20
CNVM03-606□Y	1/3	4	10.55	3.35	2.32	4.88	18	11.81	3.50	3.58	4.88	2.40	-	20
CNVM01-607□Y	1/8	4	9.13	3.35	1.38	4.69	18	10.51	3.50	2.76	4.88	1.93	-	20
CNVM02-607□Y	1/4	4	10.79	3.35	2.32	4.88	20	12.05	3.50	3.58	4.88	2.40	-	22
CNVM03-607□Y	1/3	4	10.79	3.35	2.32	4.88	20	12.05	3.50	3.58	4.88	2.40	-	22
CNVM05-607□Y	1/2	4	11.57	3.35	2.32	4.88	22	12.83	3.50	3.58	4.88	2.40	-	24
CNVM01-608□Y	1/8	4	10.16	3.35	1.38	4.69	24	11.54	3.50	2.76	4.88	1.93	-	26
CNVM02-608□Y	1/4	4	11.81	3.35	2.32	4.88	26	13.07	3.50	3.58	4.88	2.40	-	29
CNVM03-608□Y	1/3	4	11.81	3.35	2.32	4.88	26	13.07	3.50	3.58	4.88	2.40	-	29
CNVM05-608□Y	1/2	4	12.60	3.35	2.32	4.88	31	13.86	3.50	3.58	4.88	2.40	-	33
CNVM08-608□Y	3/4	4	14.21	4.49	3.82	5.83	40	15.91	5.59	5.51	5.83	3.66	4.17	42
CNVM1-608□Y	1	4	14.21	4.49	3.82	5.83	40	15.91	5.59	5.51	5.83	3.66	4.17	42
CNVM01-609□Y	1/8	4	10.87	3.35	1.38	4.69	26	12.24	3.50	2.76	4.88	1.93	-	31
CNVM02-609□Y	1/4	4	12.52	3.35	2.32	4.88	29	13.78	3.50	3.58	4.88	2.40	-	33
CNVM03-609□Y	1/3	4	12.52	3.35	2.32	4.88	29	13.78	3.50	3.58	4.88	2.40	-	33
CNVM05-609□Y	1/2	4	13.31	3.35	2.32	4.88	31	14.57	3.50	3.58	4.88	2.40	-	35
CNVM08-609□Y	3/4	4	14.92	4.49	3.82	5.83	40	16.61	5.59	5.51	5.83	3.66	4.17	46
CNVM1-609□Y	1	4	14.92	4.49	3.82	5.83	40	16.61	5.59	5.51	5.83	3.66	4.17	46
CNVM1H-609□Y	1.5	4	16.22	4.69	3.94	6.30	46	18.66	5.79	6.38	6.30	4.53	4.49	57
CNVM2-609□Y	2	4	16.22	4.69	3.94	6.30	46	18.66	5.79	6.38	6.30	4.53	4.49	57
CNVM02-610□Y	1/4	4	13.07	3.35	2.32	4.88	33	14.33	3.50	3.58	4.88	2.40	-	37
CNVM03-610□Y	1/3	4	13.07	3.35	2.32	4.88	33	14.33	3.50	3.58	4.88	2.40	-	37
CNVM05-610□Y	1/2	4	13.86	3.35	2.32	4.88	35	15.12	3.50	3.58	4.88	2.40	-	40
CNVM08-610□Y	3/4	4	15.47	4.49	3.82	5.83	44	17.17	5.59	5.51	5.83	3.66	4.17	51
CNVM1-610□Y	1	4	15.47	4.49	3.82	5.83	44	17.17	5.59	5.51	5.83	3.66	4.17	51
CNVM1H-610□Y	1.5	4	16.77	4.69	3.94	6.30	53	19.21	5.79	6.38	6.30	4.53	4.49	64
CNVM2-610□Y	2	4	16.77	4.69	3.94	6.30	53	19.21	5.79	6.38	6.30	4.53	4.49	64
CNVM3-610□Y	3	4	17.56	4.96	4.13	6.81	62	20.04	6.06	6.61	6.81	4.76	4.88	75
CNVM05-611□Y	1/2	4	14.29	3.35	2.32	4.88	40	15.51	3.50	3.58	4.88	2.40	-	44
CNVM08-611□Y	3/4	4	15.87	4.49	3.82	5.83	46	17.80	5.59	5.51	5.83	3.66	4.17	53
CNVM1-611□Y	1	4	15.87	4.49	3.82	5.83	46	17.80	5.59	5.51	5.83	3.66	4.17	53
CNVM1H-611□Y	1.5	4	17.17	4.69	3.94	6.30	53	19.41	5.79	6.38	6.30	4.53	4.49	64
CNVM2-611□Y	2	4	17.17	4.69	3.94	6.30	53	19.41	5.79	6.38	6.30	4.53	4.49	64
CNVM3-611□Y	3	4	17.95	4.96	4.13	6.81	62	20.43	6.06	6.61	6.81	4.76	4.88	75
CNVM5-611□Y	5	4	19.33	5.79	5.00	8.35	84	22.17	6.69	7.83	8.35	5.20	6.18	106
CNVM08-612□Y	3/4	4	16.65	4.49	3.82	5.83	66	18.35	5.59	5.51	5.83	3.66	4.17	73
CNVM1-612□Y	1	4	16.65	4.49	3.82	5.83	66	18.35	5.59	5.51	5.83	3.66	4.17	73
CNVM1H-612□Y	1.5	4	17.95	4.69	3.94	6.30	75	20.39	5.79	6.38	6.30	4.53	4.49	86
CNVM2-612□Y	2	4	17.95	4.69	3.94	6.30	75	20.39	5.79	6.38	6.30	4.53	4.49	86
CNVM3-612□Y	3	4	18.74	4.96	4.13	6.81	84	21.22	6.06	6.61	6.81	4.76	4.88	99
CNVM5-612□Y	5	4	19.65	5.79	5.00	8.35	106	22.48	6.69	7.83	8.35	5.20	6.18	128
CNVM8-612□Y	7.5	4	21.38	5.79	5.00	8.35	121	24.21	6.69	7.83	8.35	5.20	6.18	143

Note: [1] 0 or 5 replaces □ depending on the model selected for the application. Please refer to the Gearmotor Selection Procedure and Tables in this section.

INTEGRAL UNIVERSAL V-FLANGE MOUNT
SINGLE REDUCTION

CNVM-606□~612□[1]

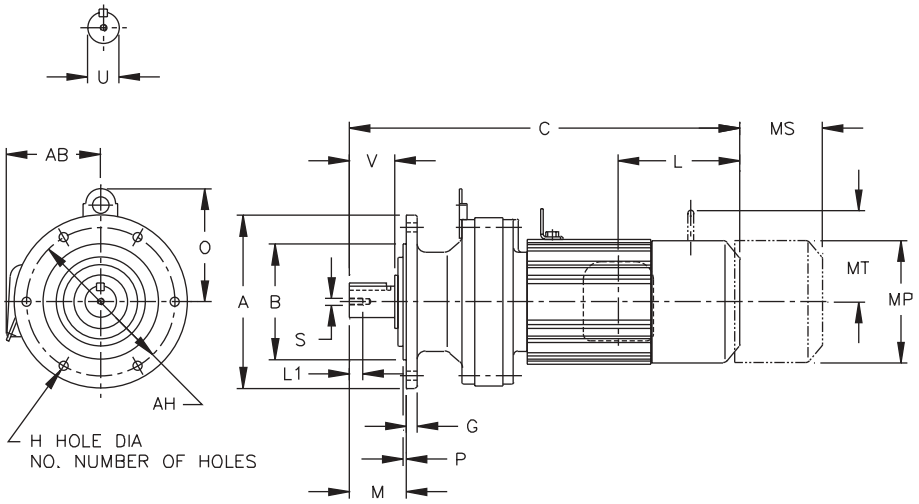

Metric (mm)[2]

Model CNVM	A	B f8	G	H	No.	M	O	P	AH
606□	120	80	8	9	6	34	-	3	102
607□	160	110	9	11	4	42	-	3	134
608□	160	110	9	11	4	48	-	3	134
609□	160	110	9	11	4	48	107	3	134
610□	160	110	9	11	4	48	107	3	134
611□	210	140	11	11	6	58	116	4	180
612□	210	140	13	11	6	69	137	4	180

Model CNVM	LOW SPEED SHAFT				
	U h6	V	S	L1	KEY
606□	14	25	M5	16	5 X 5 X 20
607□	18	30	M6	16	6 X 6 X 25
608□	22	35	M6	16	6 X 6 X 30
609□	28	35	M8	20	8 X 7 X 32
610□	28	35	M8	20	8 X 7 X 32
611□	32	45	M8	20	10 X 8 X 37
612□	38	55	M8	20	10 X 8 X 50

Notes: [1] 0 or 5 replaces □ depending on the model selected for the application. Please refer to the Gearmotor Selection Procedure and Tables in this section.
[2] The shaft dimensions shown above are hard metric sizes with metric keys. Units are available with shafting made to either DIN/ISO or JIS tolerances. Please consult factory for availability.

Dimensions shown are for reference only and are subject to change without notice, unless certified.
Certified prints are available after receipt of an order; consult factory.

CNVM-606□~612□[1] (con't.)

Metric (mm)

Model	Motor		Without Brake				Appx Wt (kg)	With Brake						Appx Wt (kg)
	kW	Pole	C	AB	L	MP		C	AB	L	MP	MS	MT	
CNVM01-606□	0.1	4	226	85	35	119	6	261	89	70	124	49	-	8
CNVM02-606□	0.2	4	268	85	59	124	7	300	89	91	124	61	-	9
CNVM03-606□	0.25	4	268	85	59	124	8	300	89	91	124	61	-	9
CNVM01-607□	0.1	4	232	85	35	119	8	267	89	70	124	49	-	9
CNVM02-607□	0.2	4	274	85	59	124	9	306	89	91	124	61	-	10
CNVM03-607□	0.25	4	274	85	59	124	9	306	89	91	124	61	-	10
CNVM05-607□	0.4	4	294	85	59	124	10	326	89	91	124	61	-	11
CNVM01-608□	0.1	4	258	85	35	119	11	293	89	70	124	49	-	12
CNVM02-608□	0.2	4	300	85	59	124	12	332	89	91	124	61	-	13
CNVM03-608□	0.25	4	300	85	59	124	12	332	89	91	124	61	-	13
CNVM05-608□	0.4	4	320	85	59	124	14	352	89	91	124	61	-	15
CNVM08-608□	0.55	4	361	114	97	148	18	404	142	140	148	93	106	19
CNVM1-608□	0.75	4	361	114	97	148	18	404	142	140	148	93	106	19
CNVM01-609□	0.1	4	276	85	35	119	12	311	89	70	124	49	-	14
CNVM02-609□	0.2	4	318	85	59	124	13	350	89	91	124	61	-	15
CNVM03-609□	0.25	4	318	85	59	124	13	350	89	91	124	61	-	15
CNVM05-609□	0.4	4	338	85	59	124	14	370	89	91	124	61	-	16
CNVM08-609□	0.55	4	379	114	97	148	18	422	142	140	148	93	106	21
CNVM1-609□	0.75	4	379	114	97	148	18	422	142	140	148	93	106	21
CNVM1H-609□	1.1	4	412	119	100	160	21	474	147	162	160	115	114	26
CNVM2-609□	1.5	4	412	119	100	160	21	474	147	162	160	115	114	26
CNVM02-610□	0.2	4	332	85	59	124	15	364	89	91	124	61	-	17
CNVM03-610□	0.25	4	332	85	59	124	15	364	89	91	124	61	-	17
CNVM05-610□	0.4	4	352	85	59	124	16	384	89	91	124	61	-	18
CNVM08-610□	0.55	4	393	114	97	148	20	436	142	140	148	93	106	23
CNVM1-610□	0.75	4	393	114	97	148	20	436	142	140	148	93	106	23
CNVM1H-610□	1.1	4	426	119	100	160	24	488	147	162	160	115	114	29
CNVM2-610□	1.5	4	426	119	100	160	24	488	147	162	160	115	114	29
CNVM3-610□	2.2	4	446	126	105	173	28	509	154	168	173	121	124	34
CNVM05-611□	0.4	4	363	85	59	124	18	394	89	91	124	61	-	20
CNVM08-611□	0.55	4	403	114	97	148	21	452	142	140	148	93	106	24
CNVM1-611□	0.75	4	403	114	97	148	21	452	142	140	148	93	106	24
CNVM1H-611□	1.1	4	436	119	100	160	24	493	147	162	160	115	114	29
CNVM2-611□	1.5	4	436	119	100	160	24	493	147	162	160	115	114	29
CNVM3-611□	2.2	4	456	126	105	173	28	519	154	168	173	121	124	34
CNVM5-611□	3.7	4	491	147	127	212	38	563	170	199	212	132	157	48
CNVM08-612□	0.55	4	423	114	97	148	30	466	142	140	148	93	106	33
CNVM1-612□	0.75	4	423	114	97	148	30	466	142	140	148	93	106	33
CNVM1H-612□	1.1	4	456	119	100	160	34	518	147	162	160	115	114	39
CNVM2-612□	1.5	4	456	119	100	160	34	518	147	162	160	115	114	39
CNVM3-612□	2.2	4	476	126	105	173	38	539	154	168	173	121	124	45
CNVM5-612□	3.7	4	499	147	127	212	48	571	170	199	212	132	157	58
CNVM8-612□	5.5	4	543	147	127	212	55	615	170	199	212	132	157	65

Note: [1] 0 or 5 replaces □ depending on the model selected for the application. Please refer to the Gearmotor Selection Procedure and Tables in this section.

INTEGRAL VERTICAL V-FLANGE MOUNT
SINGLE REDUCTION

CVVM-613□~619□[1]

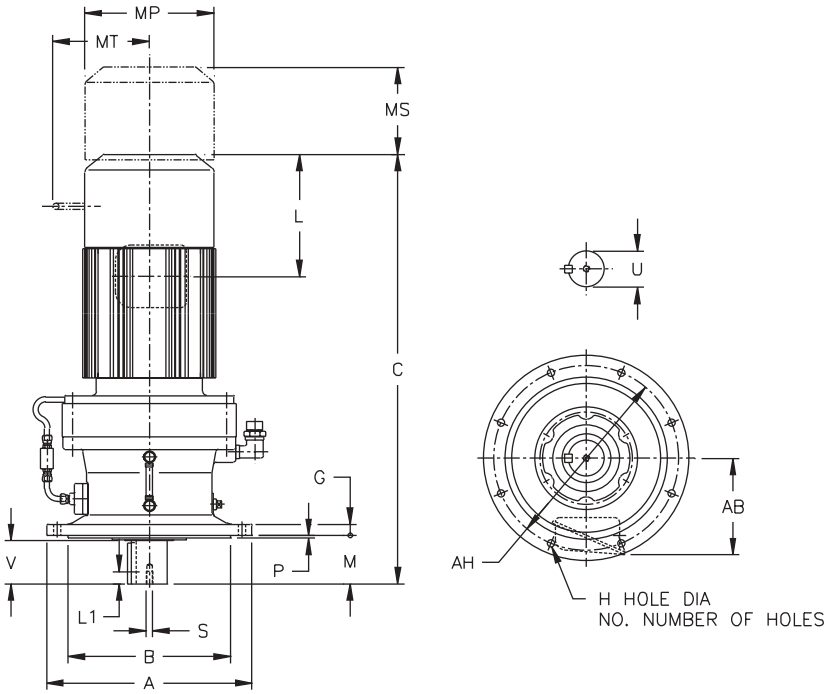

Inch (in)

Model CVVM	A	B	G	H	No.	M	P	AH
613□Y	10.24	7.8720 7.8692	0.59	0.43	6	2.99	0.16	9.06
614□Y	10.24	7.8720 7.8692	0.59	0.43	6	3.78	0.16	9.06
616□Y	13.39	10.6277 10.6245	0.79	0.43	6	3.50	0.16	12.20
617□Y	15.75	12.4385 12.4350	0.87	0.55	8	3.70	0.20	14.17
618□Y	16.93	13.5802 13.5767	0.87	0.71	8	4.33	0.20	15.35
619□Y	19.29	15.7456 15.7421	1.18	0.71	12	5.71	0.24	17.72

Model CVVM	LOW SPEED SHAFT				
	U*	V	S	L1	KEY
613□Y	1.875	2.40	3/8-16UNC	0.71	1/2 X 1/2 X 2.16
614□Y	1.875	3.19	3/8-16UNC	0.71	1/2 X 1/2 X 2.95
616□Y	2.250	3.15	3/8-16UNC	0.71	1/2 X 1/2 X 2.95
617□Y	2.750	3.31	1/2-13UNC	0.94	5/8 X 5/8 X 3.15
618□Y	3.125	3.94	1/2-13UNC	0.94	3/4 X 3/4 X 3.74
619□Y	3.625	4.92	3/4-10UNC	1.34	7/8 X 7/8 X 4.92

*** Shaft Tolerances:**

Shaft Nominal Diameter (inches)	Tolerances (inches)
1.25 (1 1/4) through 1.875 (1 7/8)	+0.0000/-0.0006
2.000 (2) through 3.125 (3 1/8)	+0.0000/-0.0007
3.250 (3 1/4) through 4.625 (4 5/8)	+0.0000/-0.0009
4.750 (4 3/4) through 7.000 (7)	+0.0000/-0.0010

Note: [1] 0 or 5 replaces □ depending on the model selected for the application. Please refer to the Gearmotor Selection Procedure and Tables in this section.

Dimensions shown are for reference only and are subject to change without notice, unless certified. Certified prints are available after receipt of an order; consult factory.

CVVM-613□~619□[1] (con't.)

Inch (in)

Model	Motor		Without Brake				Appx Wt (lb)	With Brake						Appx Wt (lb)
	HP	Pole	C	AB	L	MP		C	AB	L	MP	MS	MT	
CVVM1-613□Y	1	4	18.78	4.49	3.82	5.83	110	20.47	5.59	5.51	5.83	3.66	4.17	117
CVVM1H-613□Y	1.5	4	20.08	4.69	3.94	6.30	119	22.52	5.79	6.38	6.30	4.53	4.49	130
CVVM2-613□Y	2	4	20.08	4.69	3.94	6.30	119	22.52	5.79	6.38	6.30	4.53	4.49	130
CVVM3-613□Y	3	4	20.87	4.96	4.13	6.81	126	23.35	6.06	6.61	6.81	4.76	4.88	141
CVVM5-613□Y	5	4	21.77	5.79	5.00	8.35	148	24.61	6.69	7.83	8.35	5.20	6.18	170
CVVM8-613□Y	7.5	4	23.50	5.79	5.00	8.35	163	26.34	6.69	7.83	8.35	5.20	6.18	185
CVVM10-613□Y	10	4	24.41	7.40	5.63	9.88	196	28.15	7.40	9.37	9.88	6.69	7.17	236
CVVM15-613□Y	15	4	26.77	7.40	5.63	9.88	227	30.51	7.40	9.37	9.88	6.69	7.17	265
CVVM1H-614□Y	1.5	4	20.87	4.69	3.94	6.30	121	23.31	5.79	6.38	6.30	4.53	4.49	132
CVVM2-614□Y	2	4	20.87	4.69	3.94	6.30	121	23.31	5.79	6.38	6.30	4.53	4.49	132
CVVM3-614□Y	3	4	21.65	4.96	4.13	6.81	128	24.13	6.06	6.61	6.81	4.76	4.88	143
CVVM5-614□Y	5	4	22.56	5.79	5.00	8.35	150	25.39	6.69	7.83	8.35	5.20	6.18	172
CVVM8-614□Y	7.5	4	24.29	5.79	5.00	8.35	165	27.13	6.69	7.83	8.35	5.20	6.18	187
CVVM10-614□Y	10	4	25.20	7.40	5.63	9.88	198	28.94	7.40	9.37	9.88	6.69	7.17	238
CVVM15-614□Y	15	4	27.56	7.40	5.63	9.88	227	31.30	7.40	9.37	9.88	6.69	7.17	267
CVVM20-614□Y	20	4	31.10	9.13	11.61	12.76	342	34.65	9.13	15.16	12.76	8.66	-	415
CVVM2-616□Y	2	4	22.95	4.69	3.94	6.30	194	25.39	5.79	6.38	6.30	4.53	4.49	205
CVVM3-616□Y	3	4	23.54	4.96	4.13	6.81	201	26.02	6.06	6.61	6.81	4.76	4.88	214
CVVM5-616□Y	5	4	24.45	5.79	5.00	8.35	221	27.28	6.69	7.83	8.35	5.20	6.18	243
CVVM8-616□Y	7.5	4	26.18	5.79	5.00	8.35	236	29.02	6.69	7.83	8.35	5.20	6.18	258
CVVM10-616□Y	10	4	27.28	7.40	5.63	9.88	271	31.02	7.40	9.37	9.88	6.69	7.17	309
CVVM15-616□Y	15	4	29.65	7.40	5.63	9.88	302	33.39	7.40	9.37	9.88	6.69	7.17	340
CVVM20-616□Y	20	4	32.99	9.13	11.61	12.76	419	36.54	9.13	15.16	12.76	8.66	-	492
CVVM25-616□Y	25	4	36.73	11.69	13.39	15.51	578	45.00	11.69	21.65	15.51	14.45	-	690
CVVM30-616□Y	30	4	36.73	11.69	13.39	15.51	578	45.00	11.69	21.65	15.51	14.45	-	690
CVVM5-617□Y	5	4	26.77	5.79	5.00	8.35	315	29.61	6.69	7.83	8.35	5.20	6.18	337
CVVM8-617□Y	7.5	4	28.50	5.79	5.00	8.35	331	31.34	6.69	7.83	8.35	5.20	6.18	353
CVVM10-617□Y	10	4	29.21	7.40	5.63	9.88	364	32.95	7.40	9.37	9.88	6.69	7.17	404
CVVM15-617□Y	15	4	31.57	7.40	5.63	9.88	395	35.31	7.40	9.37	9.88	6.69	7.17	434
CVVM20-617□Y	20	4	34.72	9.13	11.61	12.76	514	38.27	9.13	15.16	12.76	8.66	-	587
CVVM25-617□Y	25	4	38.46	11.69	13.39	15.51	664	46.73	11.69	21.65	15.51	14.45	-	776
CVVM30-617□Y	30	4	38.46	11.69	13.39	15.51	664	46.73	11.69	21.65	15.51	14.45	-	776
CVVM40-617□Y	40	4	38.46	11.69	13.39	15.51	701	46.73	11.69	21.65	15.51	14.57	-	796
CVVM5-618□Y	5	4	28.23	5.79	5.00	8.35	373	31.06	6.69	7.83	8.35	5.20	6.18	395
CVVM8-618□Y	7.5	4	29.96	5.79	5.00	8.35	390	32.80	6.69	7.83	8.35	5.20	6.18	412
CVVM10-618□Y	10	4	30.67	7.40	5.63	9.88	423	34.41	7.40	9.37	9.88	6.69	7.17	463
CVVM15-618□Y	15	4	33.03	7.40	5.63	9.88	454	36.77	7.40	9.37	9.88	6.69	7.17	494
CVVM20-618□Y	20	4	36.18	9.13	11.61	12.76	587	39.72	9.13	15.16	12.76	8.66	-	648
CVVM25-618□Y	25	4	39.92	11.69	13.39	15.51	723	48.19	11.69	21.65	15.51	14.45	-	836
CVVM30-618□Y	30	4	39.92	11.69	13.39	15.51	723	48.19	11.69	21.65	15.51	14.45	-	836
CVVM40-618□Y	40	4	39.92	11.69	13.39	15.51	761	48.19	11.69	21.65	15.51	14.57	-	856
CVVM50-618□Y	50	4	44.45	11.69	16.93	15.51	867	52.91	11.69	25.39	15.51	17.52	-	1080
CVVM60-618□Y	60	4	44.45	11.69	16.93	15.51	867	52.91	11.69	25.39	15.51	17.52	-	1080
CVVM8-619□Y	7.5	4	33.74	5.79	5.00	8.35	549	36.57	6.69	7.83	8.35	5.20	6.18	571
CVVM10-619□Y	10	4	34.25	7.40	5.63	9.88	578	37.99	7.40	9.37	9.88	6.69	7.17	617
CVVM15-619□Y	15	4	36.61	7.40	5.63	9.88	609	40.35	7.40	9.37	9.88	6.69	7.17	648
CVVM20-619□Y	20	4	39.17	9.13	11.61	12.76	725	42.72	9.13	15.16	12.76	8.66	-	800
CVVM25-619□Y	25	4	42.91	11.69	13.39	15.51	884	51.18	11.69	21.65	15.51	14.45	-	983
CVVM256-619□Y	25	6	42.91	11.69	13.39	15.51	884	51.18	11.69	21.65	15.51	14.45	-	979
CVVM30-619□Y	30	4	42.91	11.69	13.39	15.51	884	51.18	11.69	21.65	15.51	14.45	-	983
CVVM40-619□Y	40	4	42.91	11.69	13.39	15.51	917	51.18	11.69	21.65	15.51	14.45	-	979
CVVM406-619□Y	40	6	47.44	11.69	16.93	15.51	1001	55.91	11.69	25.39	15.51	17.52	-	1215
CVVM50-619□Y	50	4	47.44	11.69	16.93	15.51	1001	55.91	11.69	25.39	15.51	17.52	-	1215
CVVM506-619□Y	50	6	47.44	11.69	16.93	15.51	1001	55.91	11.69	25.39	15.51	17.52	-	1215
CVVM60-619□Y	60	4	47.44	11.69	16.93	15.51	1001	55.91	11.69	25.39	15.51	17.52	-	1215

Note: [1] 0 or 5 replaces □ depending on the model selected for the application. Please refer to the Gearmotor Selection Procedure and Tables in this section.

Dimensions shown are for reference only and are subject to change without notice, unless certified.
Certified prints are available after receipt of an order; consult factory.

INTEGRAL VERTICAL V-FLANGE MOUNT
SINGLE REDUCTION

CVVM-613□~619□[1]

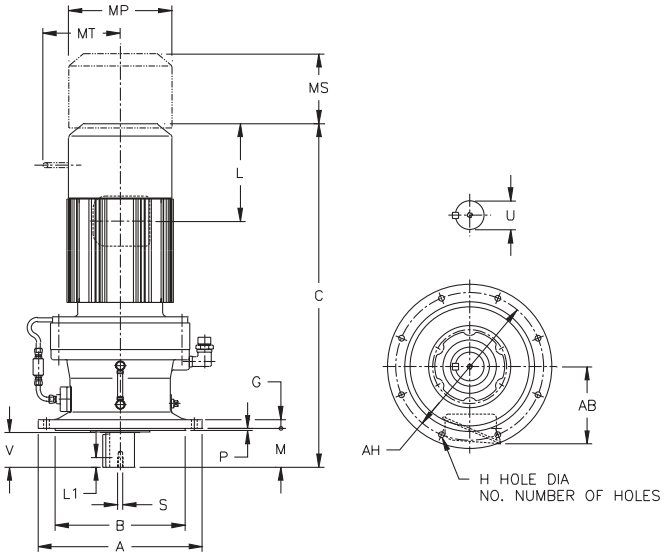

Metric (mm)[2]

Model CVVM	A	B f8	G	H	No.	M	P	AH
613□	260	200	15	11	6	76	4	230
614□	260	200	15	11	6	96	4	230
616□	340	270	20	11	6	89	4	310
617□	400	316	22	14	8	94	5	360
618□	430	345	22	18	8	110	5	390
619□	490	400	30	18	12	145	6	450

Model CVVM	LOW SPEED SHAFT				
	U h6	V	S	L1	KEY
613□	50	61	M10	18	14 X 9 X 56
614□	50	81	M10	18	14 X 9 X 80
616□	60	80	M10	18	18 X 11 X 80
617□	70	84	M12	24	20 X 12 X 80
618□	80	100	M12	24	22 X 14 X 100
619□	95	125	M20	34	25 X 14 X 125

Model	Motor		Without Brake				Appx Wt (kg)	With Brake						Appx Wt (kg)
	kW	Pole	C	AB	L	MP		C	AB	L	MP	MS	MT	
CVVM1-613□	0.75	4	477	114	97	148	50	520	142	140	148	93	106	53
CVVM1H-613□	1.1	4	510	119	100	160	54	572	147	162	160	115	114	59
CVVM2-613□	1.5	4	510	119	100	160	54	572	147	162	160	115	114	59
CVVM3-613□	2.2	4	530	126	105	173	57	593	154	168	173	121	124	64
CVVM5-613□	3.7	4	553	147	127	212	67	625	170	199	212	132	157	77
CVVM8-613□	5.5	4	597	147	127	212	74	669	170	199	212	132	157	84
CVVM10-613□	7.5	4	620	188	143	251	89	715	188	238	251	170	182	107
CVVM15-613□	11	4	680	188	143	251	103	775	188	238	251	170	182	120

Notes: [1] 0 or 5 replaces □ depending on the model selected for the application. Please refer to the Gearmotor Selection Procedure and Tables in this section.
[2] The shaft dimensions shown above are hard metric sizes with metric keys. Units are available with shafting made to either DIN/ISO or JIS tolerances. Please consult factory for availability.

Dimensions shown are for reference only and are subject to change without notice, unless certified.
Certified prints are available after receipt of an order; consult factory.

INTEGRAL VERTICAL V-FLANGE MOUNT
SINGLE REDUCTION

CVVM-613□~619□[1] (con't.)

Metric (mm)

Model	Motor		Without Brake				Appx Wt (kg)	With Brake						Appx Wt (kg)
	kW	Pole	C	AB	L	MP		C	AB	L	MP	MS	MT	
CVVM1H-614□	1.1	4	530	119	100	160	55	592	147	162	160	115	114	60
CVVM2-614□	1.5	4	530	119	100	160	55	592	147	162	160	115	114	60
CVVM3-614□	2.2	4	550	126	105	173	58	613	154	168	173	121	124	65
CVVM5-614□	3.7	4	573	147	127	212	68	645	170	199	212	132	157	78
CVVM8-614□	5.5	4	617	147	127	212	75	689	170	199	212	132	157	85
CVVM10-614□	7.5	4	640	188	143	251	90	735	188	238	251	170	182	108
CVVM15-614□	11	4	700	188	143	251	103	795	188	238	251	170	182	121
CVVM20-614□	15	4	790	232	295	324	155	880	232	385	324	220	-	188
CVVM2-616□	1.5	4	583	119	100	160	88	645	147	162	160	115	114	93
CVVM3-616□	2.2	4	598	126	105	173	91	661	154	168	173	121	124	97
CVVM5-616□	3.7	4	621	147	127	212	100	693	170	199	212	132	157	110
CVVM8-616□	5.5	4	665	147	127	212	107	737	170	199	212	132	157	117
CVVM10-616□	7.5	4	693	188	143	251	123	788	188	238	251	170	182	140
CVVM15-616□	11	4	753	188	143	251	137	848	188	238	251	170	182	154
CVVM20-616□	15	4	838	232	295	324	190	928	232	385	324	220	-	223
CVVM25-616□	18.5	4	933	297	340	394	262	1143	297	550	394	367	-	313
CVVM30-616□	22	4	933	297	340	394	262	1143	297	550	394	367	-	313
CVVM5-617□	3.7	4	680	147	127	212	143	752	170	199	212	132	157	153
CVVM8-617□	5.5	4	724	147	127	212	150	796	170	199	212	132	157	160
CVVM10-617□	7.5	4	742	188	143	251	165	837	188	238	251	170	182	183
CVVM15-617□	11	4	802	188	143	251	179	897	188	238	251	170	182	197
CVVM20-617□	15	4	882	232	295	324	233	972	232	385	324	220	-	266
CVVM25-617□	18.5	4	977	297	340	394	301	1187	297	550	394	367	-	352
CVVM30-617□	22	4	977	297	340	394	301	1187	297	550	394	367	-	352
CVVM40-617□	30	4	977	297	340	394	318	1187	297	550	394	370	-	361
CVVM5-618□	3.7	4	717	147	127	212	169	789	170	199	212	132	157	179
CVVM8-618□	5.5	4	761	147	127	212	177	833	170	199	212	132	157	187
CVVM10-618□	7.5	4	779	188	143	251	192	874	188	238	251	170	182	210
CVVM15-618□	11	4	839	188	143	251	206	934	188	238	251	170	182	224
CVVM20-618□	15	4	919	232	295	324	266	1009	232	385	324	220	-	294
CVVM25-618□	18.5	4	1014	297	340	394	328	1224	297	550	394	367	-	379
CVVM30-618□	22	4	1014	297	340	394	328	1224	297	550	394	367	-	379
CVVM40-618□	30	4	1014	297	340	394	345	1224	297	550	394	370	-	388
CVVM50-618□	37	4	1129	297	430	394	393	1344	297	645	394	445	-	490
CVVM60-618□	45	4	1129	297	430	394	393	1344	297	645	394	445	-	490
CVVM8-619□	5.5	4	857	147	127	212	249	929	170	199	212	132	157	259
CVVM10-619□	7.5	4	870	188	143	251	262	965	188	238	251	170	182	280
CVVM15-619□	11	4	930	188	143	251	276	1025	188	238	251	170	182	294
CVVM20-619□	15	4	995	232	295	324	329	1085	232	385	324	220	-	363
CVVM25-619□	18.5	4	1090	297	340	394	401	1300	297	550	394	367	-	446
CVVM256-619□	18.5	6	1090	297	340	394	401	1300	297	550	394	367	-	444
CVVM30-619□	22	4	1090	297	340	394	401	1300	297	550	394	367	-	446
CVVM40-619□	30	4	1090	297	340	394	416	1300	297	550	394	367	-	444
CVVM406-619□	30	6	1205	297	430	394	454	1420	297	645	394	445	-	551
CVVM50-619□	37	4	1205	297	430	394	454	1420	297	645	394	445	-	551
CVVM506-619□	37	6	1205	297	430	394	454	1420	297	645	394	445	-	551
CVVM60-619□	45	4	1205	297	430	394	454	1420	297	645	394	445	-	551

Dimensions shown are for reference only and are subject to change without notice, unless certified.
Certified prints are available after receipt of an order; consult factory.

INTEGRAL VERTICAL V-FLANGE MOUNT
SINGLE REDUCTION

CVVM-6205~6235

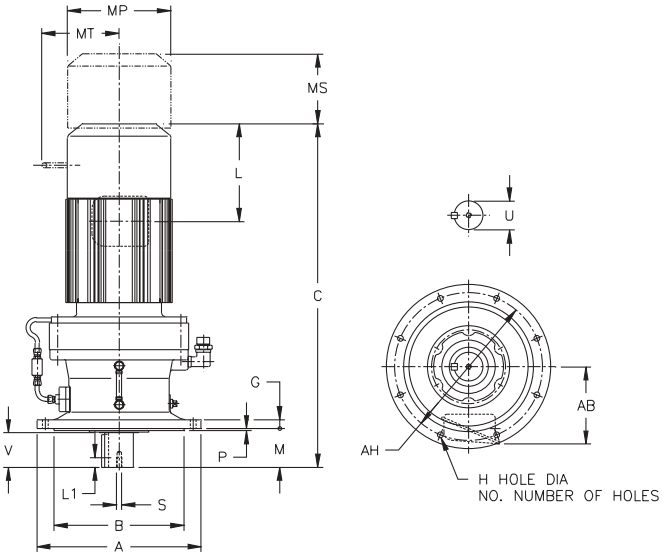

Inch (in)

Model CVVM	A	B	G	H	No.	M	P	AH
6205Y	17.91	13.9739 13.9704	1.18	0.87	8	8.03	0.20	15.94
6215Y	19.29	15.3519 15.3484	1.38	0.94	8	7.99	0.28	17.32
6225Y	21.06	16.3359 16.3321	1.38	1.06	8	8.27	0.39	18.70
6235Y	22.44	17.7139 17.7100	1.57	1.06	8	9.84	0.39	20.08

Model CVVM	LOW SPEED SHAFT				
	U*	V	S	L1	KEY
6205Y	3.875	6.50	3/4-10UNC	1.34	1 X 1 X 6.50
6215Y	4.250	6.50	3/4-10UNC	1.34	1 X 1 X 6.50
6225Y	4.625	6.50	3/4-10UNC	1.34	1-1/4 X 7/8 X 6.50
6235Y	5.000	7.87	1-8UNC	1.61	1-1/4 X 7/8 X 7.87

*** Shaft Tolerances:**

Shaft Nominal Diameter (inches)	Tolerances (inches)
1.25 (1 1/4) through 1.875 (1 7/8)	+0.0000/-0.0006
2.000 (2) through 3.125 (3 1/8)	+0.0000/-0.0007
3.250 (3 1/4) through 4.625 (4 5/8)	+0.0000/-0.0009
4.750 (4 3/4) through 7.000 (7)	+0.0000/-0.0010

Model	Motor		Without Brake				Appx Wt (lb)	With Brake						Appx Wt (lb)
	HP	Pole	C	AB	L	MP		C	AB	L	MP	MS	MT	
CVVM15-6205Y	15	4	38.27	7.40	5.63	9.88	657	42.01	7.40	9.37	9.88	6.69	7.17	697
CVVM20-6205Y	20	4	41.02	9.13	11.61	12.76	776	44.57	9.13	15.16	12.76	8.66	-	853
CVVM206-6205Y	20	6	44.37	11.69	13.39	15.51	933	52.64	11.69	21.65	15.51	14.45	-	1032
CVVM25-6205Y	25	4	44.37	11.69	13.39	15.51	933	52.64	11.69	21.65	15.51	14.45	-	1032
CVVM30-6205Y	30	4	44.37	11.69	13.39	15.51	933	52.64	11.69	21.65	15.51	14.45	-	1032
CVVM306-6205Y	30	6	44.37	11.69	13.39	15.51	961	52.64	11.69	21.65	15.51	14.57	-	1061
CVVM40-6205Y	40	4	44.37	11.69	13.39	15.51	961	52.64	11.69	21.65	15.51	14.57	-	1061
CVVM406-6205Y	40	6	48.90	11.69	16.93	15.51	1045	57.36	11.69	25.39	15.51	17.52	-	1252
CVVM50-6205Y	50	4	48.90	11.69	16.93	15.51	1045	57.36	11.69	25.39	15.51	17.52	-	1252
CVVM506-6205Y	50	6	48.90	11.69	16.93	15.51	1045	57.36	11.69	25.39	15.51	17.52	-	1252
CVVM60-6205Y	60	4	48.90	11.69	16.93	15.51	1045	57.36	11.69	25.39	15.51	17.52	-	1252
CVVM606-6205Y	60	6	51.06	16.22	18.31	19.06	1250	-	-	-	-	-	-	-
CVVM75-6205Y	75	4	51.06	16.22	18.31	19.06	1250	-	-	-	-	-	-	-

Dimensions shown are for reference only and are subject to change without notice, unless certified.
Certified prints are available after receipt of an order; consult factory.

CVVM-6205~6235 (con't.)

Inch (in)

Model	Motor		Without Brake				Appx Wt (lb)	With Brake						Appx Wt (lb)
	HP	Pole	C	AB	L	MP		C	AB	L	MP	MS	MT	
CVVM15-6215Y	15	4	39.21	7.40	5.63	9.88	829	42.95	7.40	9.37	9.88	6.69	7.17	869
CVVM20-6215Y	20	4	41.97	9.13	11.61	12.76	950	45.51	9.13	15.16	12.76	8.66	-	1025
CVVM206-6215Y	20	6	45.31	11.69	13.39	15.51	1094	53.58	11.69	21.65	15.51	14.45	-	1193
CVVM25-6215Y	25	4	45.31	11.69	13.39	15.51	1094	53.58	11.69	21.65	15.51	14.45	-	1193
CVVM256-6215Y	25	6	45.31	11.69	13.39	15.51	1122	53.58	11.69	21.65	15.51	14.45	-	1222
CVVM30-6215Y	30	4	45.31	11.69	13.39	15.51	1094	53.58	11.69	21.65	15.51	14.45	-	1193
CVVM306-6215Y	30	6	45.31	11.69	13.39	15.51	1122	53.58	11.69	21.65	15.51	14.57	-	1222
CVVM40-6215Y	40	4	45.31	11.69	13.39	15.51	1122	53.58	11.69	21.65	15.51	14.57	-	1222
CVVM406-6215Y	40	6	49.84	11.69	16.93	15.51	1244	58.31	11.69	25.39	15.51	17.52	-	1453
CVVM50-6215Y	50	4	49.84	11.69	16.93	15.51	1244	58.31	11.69	25.39	15.51	17.52	-	1453
CVVM506-6215Y	50	6	49.84	11.69	16.93	15.51	1244	58.31	11.69	25.39	15.51	17.52	-	1453
CVVM60-6215Y	60	4	49.84	11.69	16.93	15.51	1244	58.31	11.69	25.39	15.51	17.52	-	1453
CVVM606-6215Y	60	6	52.01	16.22	18.31	19.06	1449	-	-	-	-	-	-	-
CVVM75-6215Y	75	4	52.01	16.22	18.31	19.06	1449	-	-	-	-	-	-	-
CVVM206-6225Y	20	6	46.89	11.69	13.39	15.51	1297	55.16	11.69	21.65	15.51	14.45	-	1396
CVVM25-6225Y	25	4	46.89	11.69	13.39	15.51	1297	55.16	11.69	21.65	15.51	14.45	-	1396
CVVM256-6225Y	25	6	46.89	11.69	13.39	15.51	1325	55.16	11.69	21.65	15.51	14.45	-	1424
CVVM30-6225Y	30	4	46.89	11.69	13.39	15.51	1297	55.16	11.69	21.65	15.51	14.45	-	1396
CVVM306-6225Y	30	6	46.89	11.69	13.39	15.51	1325	55.16	11.69	21.65	15.51	14.57	-	1424
CVVM40-6225Y	40	4	46.89	11.69	13.39	15.51	1325	55.16	11.69	21.65	15.51	14.57	-	1424
CVVM406-6225Y	40	6	51.42	11.69	16.93	15.51	1444	59.88	11.69	25.39	15.51	17.52	-	1654
CVVM50-6225Y	50	4	51.42	11.69	16.93	15.51	1444	59.88	11.69	25.39	15.51	17.52	-	1654
CVVM506-6225Y	50	6	51.42	11.69	16.93	15.51	1444	59.88	11.69	25.39	15.51	17.52	-	1654
CVVM60-6225Y	60	4	51.42	11.69	16.93	15.51	1444	59.88	11.69	25.39	15.51	17.52	-	1654
CVVM606-6225Y	60	6	53.58	16.22	18.31	19.06	1627	-	-	-	-	-	-	-
CVVM75-6225Y	75	4	53.58	16.22	18.31	19.06	1627	-	-	-	-	-	-	-
CVVM206-6235Y	20	6	49.33	11.69	13.39	15.51	1429	57.60	11.69	21.65	15.51	14.45	-	1497
CVVM256-6235Y	25	6	49.33	11.69	13.39	15.51	1429	57.60	11.69	21.65	15.51	14.45	-	1528
CVVM306-6235Y	30	6	49.33	11.69	13.39	15.51	1429	57.60	11.69	21.65	15.51	14.57	-	1528
CVVM406-6235Y	40	6	53.86	11.69	16.93	15.51	1530	62.32	11.69	25.39	15.51	17.52	-	1724
CVVM506-6235Y	50	6	53.86	11.69	16.93	15.51	1530	62.32	11.69	25.39	15.51	17.52	-	1724
CVVM606-6235Y	60	6	56.02	16.22	18.31	19.06	1727	-	-	-	-	-	-	-
CVVM756-6235Y	75	6	59.17	16.22	19.88	19.09	1846	-	-	-	-	-	-	-

INTEGRAL VERTICAL V-FLANGE MOUNT
SINGLE REDUCTION

CVVM-6205□~6235

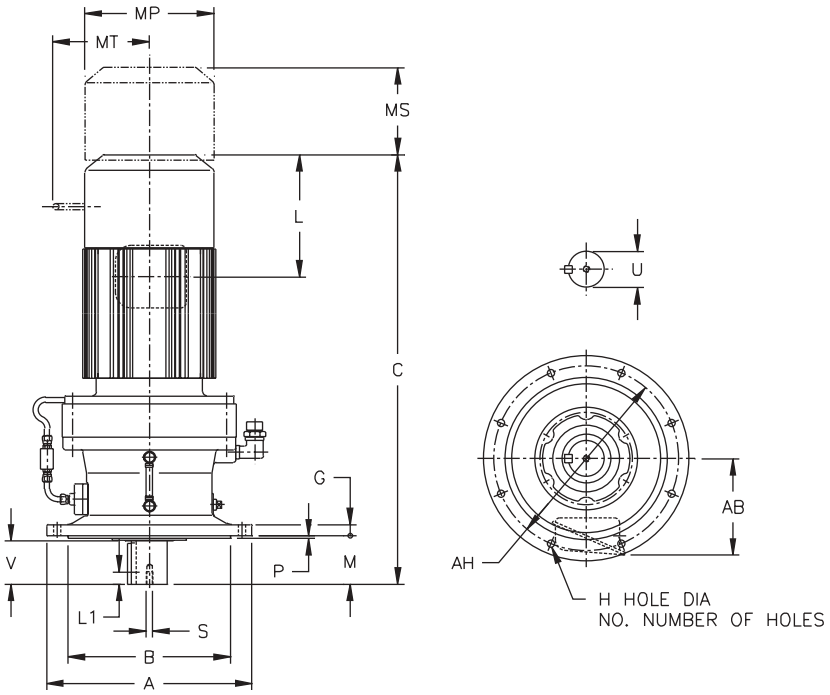

Metric (mm)[1]

Model CVVM	A	B f8	G	H	No.	M	P	AH
6205	455	355	30	22	8	204	5	405
6215	490	390	35	24	8	203	7	440
6225	535	415	35	27	8	210	10	475
6235	570	450	40	27	8	250	10	510

Model CVVM	LOW SPEED SHAFT				
	U h6	V	S	L1	KEY
6205	100	165	M20	34	28 X 16 X 165
6215	110	165	M20	34	28 X 16 X 165
6225	120	165	M20	34	32 X 18 X 165
6235	130	200	M24	41	32 X 18 X 200

Model	Motor		Without Brake				Appx Wt (kg)	With Brake						Appx Wt (kg)
	kW	Pole	C	AB	L	MP		C	AB	L	MP	MS	MT	
CVVM15-6205	11	4	972	188	143	251	298	1067	188	238	251	170	182	316
CVVM20-6205	15	4	1042	232	295	324	352	1132	232	385	324	220	-	387
CVVM206-6205	15	6	1127	297	340	394	423	1337	297	550	394	367	-	468
CVVM25-6205	18.5	4	1127	297	340	394	423	1337	297	550	394	367	-	468
CVVM30-6205	22	4	1127	297	340	394	423	1337	297	550	394	367	-	468
CVVM306-6205	22	6	1127	297	340	394	436	1337	297	550	394	370	-	481
CVVM40-6205	30	4	1127	297	340	394	436	1337	297	550	394	370	-	481
CVVM406-6205	30	6	1242	297	430	394	474	1457	297	645	394	445	-	568
CVVM50-6205	37	4	1242	297	430	394	474	1457	297	645	394	445	-	568
CVVM506-6205	37	6	1242	297	430	394	474	1457	297	645	394	445	-	568
CVVM60-6205	45	4	1242	297	430	394	474	1457	297	645	394	445	-	568
CVVM606-6205	45	6	1297	412	465	484	567	-	-	-	-	-	-	-
CVVM75-6205	55	4	1297	412	465	484	567	-	-	-	-	-	-	-

Notes: [1] The shaft dimensions shown above are hard metric sizes with metric keys. Units are available with shafting made to either DIN/ISO or JIS tolerances. Please consult factory for availability.

Dimensions shown are for reference only and are subject to change without notice, unless certified.
Certified prints are available after receipt of an order; consult factory.

CVVM-6205□~6235 (con't.)

Metric (mm)

Model	Motor		Without Brake				Appx Wt (kg)	With Brake						Appx Wt (kg)
	kW	Pole	C	AB	L	MP		C	AB	L	MP	MS	MT	
CVVM15-6215	11	4	996	188	143	251	376	1091	188	238	251	170	182	394
CVVM20-6215	15	4	1066	232	295	324	431	1156	232	385	324	220	-	465
CVVM206-6215	15	6	1151	297	340	394	496	1361	297	550	394	367	-	541
CVVM25-6215	18.5	4	1151	297	340	394	496	1361	297	550	394	367	-	541
CVVM256-6215	18.5	6	1151	297	340	394	509	1361	297	550	394	367	-	554
CVVM30-6215	22	4	1151	297	340	394	496	1361	297	550	394	367	-	541
CVVM306-6215	22	6	1151	297	340	394	509	1361	297	550	394	370	-	554
CVVM40-6215	30	4	1151	297	340	394	509	1361	297	550	394	370	-	554
CVVM406-6215	30	6	1266	297	430	394	564	1481	297	645	394	445	-	659
CVVM50-6215	37	4	1266	297	430	394	564	1481	297	645	394	445	-	659
CVVM506-6215	37	6	1266	297	430	394	564	1481	297	645	394	445	-	659
CVVM60-6215	45	4	1266	297	430	394	564	1481	297	645	394	445	-	659
CVVM606-6215	45	6	1321	412	465	484	657	-	-	-	-	-	-	-
CVVM75-6215	55	4	1321	412	465	484	657	-	-	-	-	-	-	-
CVVM206-6225	15	6	1191	297	340	394	588	1401	297	550	394	367	-	633
CVVM25-6225	18.5	4	1191	297	340	394	588	1401	297	550	394	367	-	633
CVVM256-6225	18.5	6	1191	297	340	394	601	1401	297	550	394	367	-	646
CVVM30-6225	22	4	1191	297	340	394	588	1401	297	550	394	367	-	633
CVVM306-6225	22	6	1191	297	340	394	601	1401	297	550	394	370	-	646
CVVM40-6225	30	4	1191	297	340	394	601	1401	297	550	394	370	-	646
CVVM406-6225	30	6	1306	297	430	394	655	1521	297	645	394	445	-	750
CVVM50-6225	37	4	1306	297	430	394	655	1521	297	645	394	445	-	750
CVVM506-6225	37	6	1306	297	430	394	655	1521	297	645	394	445	-	750
CVVM60-6225	45	4	1306	297	430	394	655	1521	297	645	394	445	-	750
CVVM606-6225	45	6	1361	412	465	484	738	-	-	-	-	-	-	-
CVVM75-6225	55	4	1361	412	465	484	738	-	-	-	-	-	-	-
CVVM206-6235	15	6	1253	297	340	394	648	1463	297	550	394	367	-	679
CVVM256-6235	18.5	6	1253	297	340	394	648	1463	297	550	394	367	-	693
CVVM306-6235	22	6	1253	297	340	394	648	1463	297	550	394	370	-	693
CVVM406-6235	30	6	1368	297	430	394	694	1583	297	645	394	445	-	782
CVVM506-6235	37	6	1368	297	430	394	694	1583	297	645	394	445	-	782
CVVM606-6235	45	6	1423	412	465	484	783	-	-	-	-	-	-	-
CVVM756-6235	55	6	1503	412	505	485	837	-	-	-	-	-	-	-

INTEGRAL VERTICAL V-FLANGE MOUNT
SINGLE REDUCTION

CVVM-6245~6265

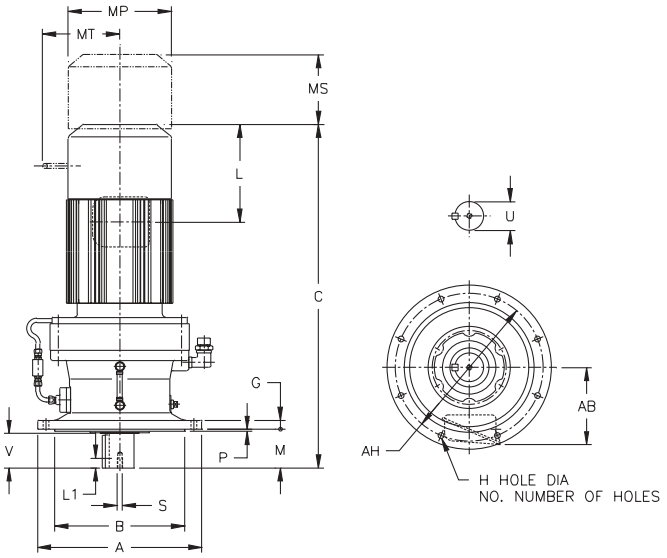

Inch (in)

Model CVVM	A	B	G	H	No.	M	P	AH
6245Y	25.00	19.0918 19.0880	1.57	1.30	8	9.84	0.39	22.05
6255Y	26.97	21.0600 21.0557	1.77	1.30	8	11.61	0.39	24.02
6265Y	29.53	22.4380 22.4336	1.97	1.54	8	14.17	0.39	25.98

Model CVVM	LOW SPEED SHAFT				
	U*	V	S	L1	KEY
6245Y	5.500	7.87	1-8UNC	1.61	1-1/4 X 7/8 X 7.87
6255Y	6.250	9.45	1-1/4-7UNC	1.93	1-1/2 X 1 X 9.45
6265Y	6.625	11.81	1-1/4-7UNC	1.93	1-3/4 X 1-1/4 X 11.8

*** Shaft Tolerances:**

Shaft Nominal Diameter (inches)	Tolerances (inches)
1.25 (1 1/4) through 1.875 (1 7/8)	+0.0000/-0.0006
2.000 (2) through 3.125 (3 1/8)	+0.0000/-0.0007
3.250 (3 1/4) through 4.625 (4 5/8)	+0.0000/-0.0009
4.750 (4 3/4) through 7.000 (7)	+0.0000/-0.0010

Model	Motor		Without Brake				Appx Wt (lb)	With Brake						Appx Wt (lb)
	HP	Pole	C	AB	L	MP		C	AB	L	MP	MS	MT	
CVVM206-6245Y	20	6	50.47	11.69	13.39	15.51	1663	58.74	11.69	21.65	15.51	14.45	-	1735
CVVM256-6245Y	25	6	50.47	11.69	13.39	15.51	1663	58.74	11.69	21.65	15.51	14.45	-	1766
CVVM306-6245Y	30	6	50.47	11.69	13.39	15.51	1663	58.74	11.69	21.65	15.51	14.57	-	1766
CVVM406-6245Y	40	6	55.00	11.69	16.93	15.51	1764	63.46	11.69	25.39	15.51	17.52	-	1958
CVVM506-6245Y	50	6	55.00	11.69	16.93	15.51	1764	63.46	11.69	25.39	15.51	17.52	-	1958
CVVM606-6245Y	60	6	57.17	16.22	18.31	19.06	1965	-	-	-	-	-	-	-
CVVM756-6245Y	75	6	60.31	16.22	19.88	19.09	2073	-	-	-	-	-	-	-
CVVM256-6255Y	25	6	55.12	11.69	13.39	15.51	2293	67.91	11.69	21.65	15.51	14.45	-	2496
CVVM306-6255Y	30	6	55.12	11.69	13.39	15.51	2293	67.91	11.69	21.65	15.51	14.57	-	2496
CVVM406-6255Y	40	6	59.65	11.69	16.93	15.51	2392	68.11	11.69	25.39	15.51	17.52	-	2586
CVVM506-6255Y	50	6	59.65	11.69	16.93	15.51	2392	68.11	11.69	25.39	15.51	17.52	-	2586
CVVM606-6255Y	60	6	61.81	16.22	18.31	19.06	2569	-	-	-	-	-	-	-
CVVM756-6255Y	75	6	64.96	16.22	19.88	19.09	2690	-	-	-	-	-	-	-
CVVM406-6265Y	40	6	64.25	11.69	16.93	15.51	3065	72.72	11.69	25.39	15.51	17.52	-	3259
CVVM506-6265Y	50	6	64.25	11.69	16.93	15.51	3065	72.72	11.69	25.39	15.51	17.52	-	3259
CVVM606-6265Y	60	6	66.42	16.22	18.31	19.06	3274	-	-	-	-	-	-	-

Dimensions shown are for reference only and are subject to change without notice, unless certified.
Certified prints are available after receipt of an order; consult factory.

CVVM-6245~6265 (con't.)

Metric (mm)[1]

Model CVVM	A	B f8	G	H	No.	M	P	AH
6245	635	485	40	33	8	250	10	560
6255	685	535	45	33	8	295	10	610
6265	750	570	50	39	8	360	10	660

Model CVVM	LOW SPEED SHAFT				
	U h6	V	S	L1	KEY
6245	140	200	M24	41	36 X 20 X 200
6255	160	240	M30	49	40 X 22 X 240
6265	170	300	M30	49	40 X 22 X 300

Model	Motor		Without Brake				Appx Wt (kg)	With Brake						Appx Wt (kg)
	kW	Pole	C	AB	L	MP		C	AB	L	MP	MS	MT	
CVVM206-6245	15	6	1282	297	340	394	754	1492	297	550	394	367	-	787
CVVM256-6245	18.5	6	1282	297	340	394	754	1492	297	550	394	367	-	801
CVVM306-6245	22	6	1282	297	340	394	754	1492	297	550	394	370	-	801
CVVM406-6245	30	6	1397	297	430	394	800	1612	297	645	394	445	-	888
CVVM506-6245	37	6	1397	297	430	394	800	1612	297	645	394	445	-	888
CVVM606-6245	45	6	1452	412	465	484	891	-	-	-	-	-	-	-
CVVM756-6245	55	6	1532	412	505	485	940	-	-	-	-	-	-	-
CVVM256-6255	18.5	6	1400	297	340	394	1040	1725	297	550	394	367	-	1132
CVVM306-6255	22	6	1400	297	340	394	1040	1725	297	550	394	370	-	1132
CVVM406-6255	30	6	1515	297	430	394	1085	1730	297	645	394	445	-	1173
CVVM506-6255	37	6	1515	297	430	394	1085	1730	297	645	394	445	-	1173
CVVM606-6255	45	6	1570	412	465	484	1165	-	-	-	-	-	-	-
CVVM756-6255	55	6	1650	412	505	485	1220	-	-	-	-	-	-	-
CVVM406-6265	30	6	1632	297	430	394	1390	1847	297	645	394	445	-	1478
CVVM506-6265	37	6	1632	297	430	394	1390	1847	297	645	394	445	-	1478
CVVM606-6265	45	6	1687	412	465	484	1485	-	-	-	-	-	-	-

Notes: [1] The shaft dimensions shown above are hard metric sizes with metric keys. Units are available with shafting made to either DIN/ISO or JIS tolerances. Please consult factory for availability.

INTEGRAL UNIVERSAL V-FLANGE MOUNT
DOUBLE REDUCTION

CNVM-606□DA~612□DB[1]

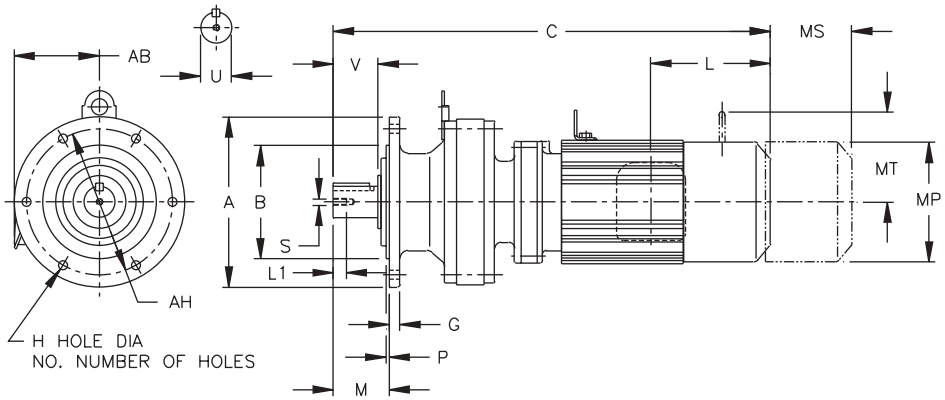

Inch (in)

Model CNVM	A	B	G	H	No.	M	O	P	AH
606□DAY	4.72	3.1484 3.1466	0.31	0.35	6	1.34	-	0.12	4.02
607□DAY	6.30	4.3293 4.3272	0.35	0.43	4	1.65	-	0.12	5.28
609□DAY	6.30	4.3293 4.3272	0.35	0.43	4	1.89	4.21	0.12	5.28
610□DAY	6.30	4.3293 4.3272	0.35	0.43	4	1.89	4.21	0.12	5.28
612□DBY	8.27	5.5101 5.5076	0.51	0.43	6	2.72	5.39	0.16	7.09

Model CNVM	LOW SPEED SHAFT				
	U*	V	S	L1	KEY
606□DAY	0.500	0.98	10-32UNF	0.63	1/8 X 1/8 X 0.79
607□DAY	0.750	1.18	12-28UNF	0.63	3/16 X 3/16 X 1.06
609□DAY	1.125	1.38	5/16-18UNC	0.79	1/4 X 1/4 X 1.18
610□DAY	1.125	1.38	5/16-18UNC	0.79	1/4 X 1/4 X 1.18
612□DBY	1.500	2.17	5/16-18UNC	0.79	3/8 X 3/8 X 1.77

*** Shaft Tolerances:**

Shaft Nominal Diameter (inches)	Tolerances (inches)
0.500 (1/2) through 0.625 (5/8)	+0.0000/-0.0004
0.750 (3/4) through 1.125 (1 1/8)	+0.0000/-0.0005
1.25 (1 1/4) through 1.875 (1 7/8)	+0.0000/-0.0006

Model	Motor		Without Brake				Appx Wt (lb)	With Brake						Appx Wt (lb)
	HP	Pole	C	AB	L	MP		C	AB	L	MP	MS	MT	
CNVM01-606□DAY	1/8	4	10.20	3.35	1.38	4.69	18	11.57	3.50	2.76	4.88	1.93	-	24
CNVM01-607□DAY	1/8	4	10.43	3.35	1.38	4.69	18	11.81	3.50	2.76	4.88	1.93	-	24
CNVM02-607□DAY	1/4	4	12.09	3.35	2.32	4.88	20	13.35	3.50	3.58	4.88	2.40	-	26
CNVM01-609□DAY	1/8	4	12.76	3.35	1.38	4.69	33	14.13	3.50	2.76	4.88	1.93	-	35
CNVM02-609□DAY	1/4	4	14.41	3.35	2.32	4.88	35	15.67	3.50	3.58	4.88	2.40	-	37
CNVM03-609□DAY	1/3	4	14.41	3.35	2.32	4.88	35	15.67	3.50	3.58	4.88	2.40	-	37
CNVM05-609□DAY	1/2	4	15.20	3.35	2.32	4.88	37	16.46	3.50	3.58	4.88	2.40	-	40
CNVM01-610□DAY	1/8	4	13.31	3.35	1.38	4.69	35	14.69	3.50	2.76	4.88	1.93	-	37
CNVM02-610□DAY	1/4	4	14.96	3.35	2.32	4.88	37	16.22	3.50	3.58	4.88	2.40	-	40
CNVM03-610□DAY	1/3	4	14.96	3.35	2.32	4.88	37	16.22	3.50	3.58	4.88	2.40	-	40
CNVM05-610□DAY	1/2	4	15.75	3.35	2.32	4.88	40	17.01	3.50	3.58	4.88	2.40	-	42
CNVM01-612□DBY	1/8	4	15.20	3.35	1.38	4.69	68	16.57	3.50	2.76	4.88	1.93	-	73
CNVM03-612□DBY	1/3	4	16.85	3.35	2.32	4.88	71	18.62	3.50	3.58	4.88	2.40	-	75
CNVM05-612□DBY	1/2	4	17.64	3.35	2.32	4.88	73	18.62	3.50	3.58	4.88	2.40	-	77
CNVM08-612□DBY	3/4	4	19.25	4.49	3.82	5.83	82	20.94	5.59	5.51	5.83	3.66	4.17	88
CNVM1-612□DBY	1	4	19.25	4.49	3.82	5.83	82	20.94	5.59	5.51	5.83	3.66	4.17	88
CNVM1H-612□DBY	1.5	4	20.31	4.69	3.94	6.30	90	22.76	5.79	6.38	6.30	4.53	4.49	101
CNVM2-612□DBY	2	4	20.31	4.69	3.94	6.30	90	22.76	5.79	6.38	6.30	4.53	4.49	101

Note: [1] 0 or 5 replaces □ depending on the model selected for the application. Please refer to the Gearmotor Selection Procedure and Tables in this section.

Dimensions shown are for reference only and are subject to change without notice, unless certified. Certified prints are available after receipt of an order; consult factory.

CNVM-606□DA~612□DB[1] (con't.)

Metric (mm)[2]

Model CNVM	A	B f8	G	H	No.	M	O	P	AH
606□DA	120	80	8	9	6	34	-	3	102
607□DA	160	110	9	11	4	42	-	3	134
609□DA	160	110	9	11	4	48	107	3	134
610□DA	160	110	9	11	4	48	107	3	134
612□DB	210	140	13	11	6	69	137	4	180

Model CNVM	LOW SPEED SHAFT				
	U h6	V	S	L1	KEY
606□DA	14	25	M5	16	5 X 5 X 20
607□DA	18	30	M6	16	6 X 6 X 25
609□DA	28	35	M8	20	8 X 7 X 32
610□DA	28	35	M8	20	8 X 7 X 32
612□DB	38	55	M8	20	10 X 8 X 50

Model	Motor		Without Brake				Appx Wt (kg)	With Brake						Appx Wt (kg)
	kW	Pole	C	AB	L	MP		C	AB	L	MP	MS	MT	
CNVM01-606□DA	0.1	4	259	85	35	119	8	294	89	70	124	49	-	11
CNVM01-607□DA	0.1	4	265	85	35	119	8	300	89	70	124	49	-	11
CNVM02-607□DA	0.2	4	307	85	59	124	9	339	89	91	124	61	-	12
CNVM01-609□DA	0.1	4	324	85	35	119	15	359	89	70	124	49	-	16
CNVM02-609□DA	0.2	4	366	85	59	124	16	398	89	91	124	61	-	17
CNVM03-609□DA	0.25	4	366	85	59	124	16	398	89	91	124	61	-	17
CNVM05-609□DA	0.4	4	386	85	59	124	17	418	89	91	124	61	-	18
CNVM01-610□DA	0.1	4	338	85	35	119	16	373	89	70	124	49	-	17
CNVM02-610□DA	0.2	4	380	85	59	124	17	412	89	91	124	61	-	18
CNVM03-610□DA	0.25	4	380	85	59	124	17	412	89	91	124	61	-	18
CNVM05-610□DA	0.4	4	400	85	59	124	18	432	89	91	124	61	-	19
CNVM01-612□DB	0.1	4	386	85	35	119	31	421	89	70	124	49	-	33
CNVM03-612□DB	0.25	4	428	85	59	124	32	473	89	91	124	61	-	34
CNVM05-612□DB	0.4	4	448	85	59	124	33	473	89	91	124	61	-	35
CNVM08-612□DB	0.55	4	489	114	97	148	37	532	142	140	148	93	106	40
CNVM1-612□DB	0.75	4	489	114	97	148	37	532	142	140	148	93	106	40
CNVM1H-612□DB	1.1	4	516	119	100	160	41	578	147	162	160	115	114	46
CNVM2-612□DB	1.5	4	516	119	100	160	41	578	147	162	160	115	114	46

Notes: [1] 0 or 5 replaces □ depending on the model selected for the application. Please refer to the Gearmotor Selection Procedure and Tables in this section.
[2] The shaft dimensions shown above are hard metric sizes with metric keys. Units are available with shafting made to either DIN/ISO or JIS tolerances. Please consult factory for availability.

INTEGRAL VERTICAL V-FLANGE MOUNT
DOUBLE REDUCTION

CVVM-613□DC~619□DB[1]

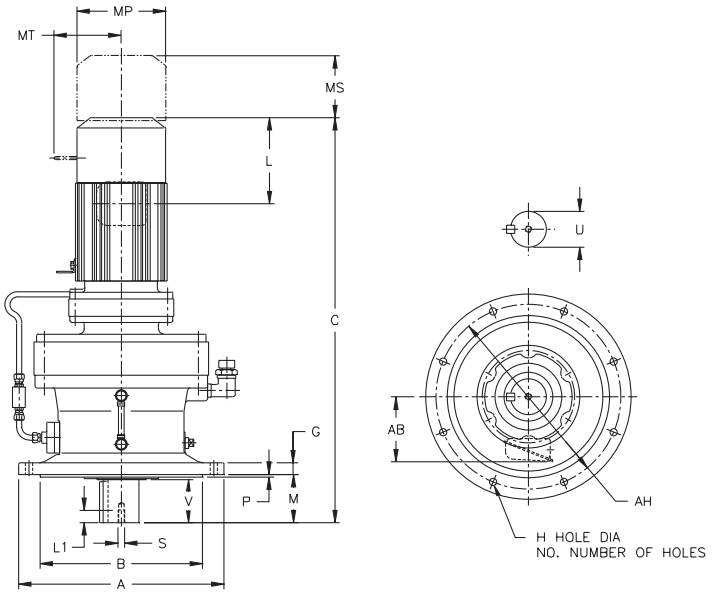

Inch (in)

Model CVVM	A	B	G	H	No.	M	P	AH
613□DCY	10.24	7.8720 7.8692	0.59	0.43	6	2.99	0.16	9.06
614□DBY	10.24	7.8720 7.8692	0.59	0.43	6	3.78	0.16	9.06
616□DCY	13.39	10.6277 10.6245	0.79	0.43	6	3.50	0.16	12.20
617□DCY	15.75	12.4385 12.4350	0.87	0.55	8	3.70	0.20	14.17
618□DBY	16.93	13.5802 13.5767	0.87	0.71	8	4.33	0.20	15.35
619□DAY	19.29	15.7456 15.7421	1.18	0.71	12	5.71	0.24	17.72
619□DBY	19.29	15.7456 15.7421	1.18	0.71	12	5.71	0.24	17.72

Model CVVM	LOW SPEED SHAFT				
	U*	V	S	L1	KEY
613□DCY	1.875	2.40	3/8-16UNC	0.71	1/2 X 1/2 X 2.16
614□DBY	1.875	3.19	3/8-16UNC	0.71	1/2 X 1/2 X 2.95
616□DCY	2.250	3.15	3/8-16UNC	0.71	1/2 X 1/2 X 2.95
617□DCY	2.750	3.31	1/2-13UNC	0.94	5/8 X 5/8 X 3.15
618□DBY	3.125	3.94	1/2-13UNC	0.94	3/4 X 3/4 X 3.74
619□DAY	3.625	4.92	3/4-10UNC	1.34	7/8 X 7/8 X 4.92
619□DBY	3.625	4.92	3/4-10UNC	1.34	7/8 X 7/8 X 4.92

*** Shaft Tolerances:**

Shaft Nominal Diameter (inches)	Tolerances (inches)
2.000 (2) through 3.125 (3 1/8)	+0.0000/-0.0007
3.250 (3 1/4) through 4.625 (4 5/8)	+0.0000/-0.0009
4.750 (4 3/4) through 7.000 (7)	+0.0000/-0.0010

Model	Motor		Without Brake				Appx Wt (lb)	With Brake						Appx Wt (lb)
	HP	Pole	C	AB	L	MP		C	AB	L	MP	MS	MT	
CVVM02-613□DCY	1/4	4	19.41	3.35	2.32	4.88	110	20.67	3.50	3.58	4.88	2.40	-	115
CVVM03-613□DCY	1/3	4	19.41	3.35	2.32	4.88	110	20.67	3.50	3.58	4.88	2.40	-	115
CVVM05-613□DCY	1/2	4	20.20	3.35	2.32	4.88	112	21.46	3.50	3.58	4.88	2.40	-	117
CVVM08-613□DCY	3/4	4	21.81	4.49	3.82	5.83	121	23.50	5.59	5.51	5.83	3.66	4.17	117
CVVM1-613□DCY	1	4	21.81	4.49	3.82	5.83	121	23.50	5.59	5.51	5.83	3.66	4.17	128
CVVM1H-613□DCY	1.5	4	23.11	4.69	3.94	6.30	130	25.55	5.79	6.38	6.30	4.53	4.49	141
CVVM2-613□DCY	2	4	23.11	4.69	3.94	6.30	130	25.55	5.79	6.38	6.30	4.53	4.49	141
CVVM3-613□DCY	3	4	23.90	4.96	4.13	6.81	139	26.38	6.06	6.61	6.81	4.76	4.88	152

Note: [1] 0 or 5 replaces □ depending on the model selected for the application. Please refer to the Gearmotor Selection Procedure and Tables in this section.

Dimensions shown are for reference only and are subject to change without notice, unless certified.
Certified prints are available after receipt of an order; consult factory.

CVVM-613□DC~619□DB[1] (con't.)

Inch (in)

Model	Motor		Without Brake				Appx Wt (lb)	With Brake						Appx Wt (lb)
	HP	Pole	C	AB	L	MP		C	AB	L	MP	MS	MT	
CVVM01-614□DBY	1/8	4	17.99	3.35	1.38	4.69	101	19.37	3.50	2.76	4.88	1.93	-	106
CVVM02-614□DBY	1/4	4	19.65	3.35	2.32	4.88	104	20.91	3.50	3.58	4.88	2.40	-	108
CVVM03-614□DBY	1/3	4	19.65	3.35	2.32	4.88	104	20.91	3.50	3.58	4.88	2.40	-	108
CVVM05-614□DBY	1/2	4	20.43	3.35	2.32	4.88	106	21.69	3.50	3.58	4.88	2.40	-	110
CVVM08-614□DBY	3/4	4	22.05	4.49	3.82	5.83	115	23.74	5.59	5.51	5.83	3.66	4.17	121
CVVM1-614□DBY	1	4	22.05	4.49	3.82	5.83	115	23.74	5.59	5.51	5.83	3.66	4.17	121
CVVM1H-614□DBY	1.5	4	23.35	4.69	3.94	6.30	123	25.79	5.79	6.38	6.30	4.53	4.49	135
CVVM2-614□DBY	2	4	23.35	4.69	3.94	6.30	123	25.79	5.79	6.38	6.30	4.53	4.49	135
CVVM3-616□DCY	3	4	26.73	4.96	4.13	6.81	234	29.21	6.06	6.61	6.81	4.76	4.88	249
CVVM05-616□DCY	1/2	4	23.07	3.35	2.32	4.88	207	24.49	3.50	3.58	4.88	2.40	-	212
CVVM08-616□DCY	3/4	4	24.65	4.49	3.82	5.83	216	26.34	5.59	5.51	5.83	3.66	4.17	223
CVVM1-616□DCY	1	4	24.65	4.49	3.82	5.83	216	26.34	5.59	5.51	5.83	3.66	4.17	223
CVVM1H-616□DCY	1.5	4	25.94	4.69	3.94	6.30	225	28.39	5.79	6.38	6.30	4.53	4.49	236
CVVM5-616□DCY	5	4	27.64	5.79	5.00	8.35	256	30.47	6.69	7.83	8.35	5.20	6.18	278
CVVM8-616□DCY	7.5	4	29.37	5.79	5.00	8.35	278	32.20	6.69	7.83	8.35	5.20	6.18	300
CVVM05-617□DCY	1/2	4	24.92	3.35	2.32	4.88	284	26.34	3.50	3.58	4.88	2.40	-	289
CVVM08-617□DCY	3/4	4	26.50	4.49	3.82	5.83	293	28.19	5.59	5.51	5.83	3.66	4.17	300
CVVM1-617□DCY	1	4	26.50	4.49	3.82	5.83	293	28.19	5.59	5.51	5.83	3.66	4.17	300
CVVM1H-617□DCY	1.5	4	27.80	4.69	3.94	6.30	302	30.24	5.79	6.38	6.30	4.53	4.49	313
CVVM2-617□DCY	2	4	27.80	4.69	3.94	6.30	302	30.24	5.79	6.38	6.30	4.53	4.49	313
CVVM3-617□DCY	3	4	28.58	4.96	4.13	6.81	311	31.06	6.06	6.61	6.81	4.76	4.88	326
CVVM5-617□DCY	5	4	29.49	5.79	5.00	8.35	333	32.32	6.69	7.83	8.35	5.20	6.18	355
CVVM8-617□DCY	7.5	4	31.22	5.79	5.00	8.35	355	34.06	6.69	7.83	8.35	5.20	6.18	377
CVVM1-618□DBY	1	4	28.86	4.49	3.82	5.83	386	30.55	5.59	5.51	5.83	3.66	4.17	392
CVVM1H-618□DBY	1.5	4	30.16	4.69	3.94	6.30	395	32.60	5.79	6.38	6.30	4.53	4.49	406
CVVM2-618□DBY	2	4	30.16	4.69	3.94	6.30	395	32.60	5.79	6.38	6.30	4.53	4.49	406
CVVM3-618□BY	3	4	30.94	4.96	4.13	6.81	401	33.43	6.06	6.61	6.81	4.76	4.88	417
CVVM5-618□DBY	5	4	31.85	5.79	5.00	8.35	423	34.69	6.69	7.83	8.35	5.20	6.18	445
CVVM8-618□DBY	7.5	4	33.58	5.79	5.00	8.35	439	36.42	6.69	7.83	8.35	5.20	6.18	461
CVVM10-618□DBY	10	4	34.49	7.40	5.63	9.88	472	38.23	7.40	9.37	9.88	6.69	7.17	512
CVVM15-618□DBY	15	4	36.85	7.40	5.63	9.88	503	40.59	7.40	9.37	9.88	6.69	7.17	542
CVVM1-619□DAY	1	4	31.22	4.49	3.82	5.83	523	32.91	5.59	5.51	5.83	3.66	4.17	529
CVVM1H-619□DAY	1.5	4	32.52	4.69	3.94	6.30	531	34.96	5.79	6.38	6.30	4.53	4.49	542
CVVM2-619□DAY	2	4	32.52	4.69	3.94	6.30	531	34.96	5.79	6.38	6.30	4.53	4.49	542
CVVM3-619□DAY	3	4	33.31	4.96	4.13	6.81	540	35.79	6.06	6.61	6.81	4.76	4.88	556
CVVM5-619□DAY	5	4	34.21	5.79	5.00	8.35	562	37.05	6.69	7.83	8.35	5.20	6.18	584
CVVM8-619□DAY	7.5	4	35.94	5.79	5.00	8.35	578	38.78	6.69	7.83	8.35	5.20	6.18	600
CVVM5-6195DBY	5	4	34.84	5.79	5.00	8.35	578	37.68	6.69	7.83	8.35	5.20	6.18	600
CVVM8-6195DBY	7.5	4	36.57	5.79	5.00	8.35	593	39.41	6.69	7.83	8.35	5.20	6.18	615
CVVM10-6195DBY	10	4	37.48	7.40	5.63	9.88	626	41.22	7.40	9.37	9.88	6.69	7.17	666
CVVM15-6195DBY	15	4	39.84	7.40	5.63	9.88	657	43.58	7.40	9.37	9.88	6.69	7.17	697
CVVM20-6195DBY	20	4	43.39	9.13	11.61	12.76	772	46.93	9.13	15.16	12.76	8.66	-	845

Dimensions shown are for reference only and are subject to change without notice, unless certified.
Certified prints are available after receipt of an order; consult factory.

INTEGRAL VERTICAL V-FLANGE MOUNT
DOUBLE REDUCTION

CVVM-613□DC~619DB[1]

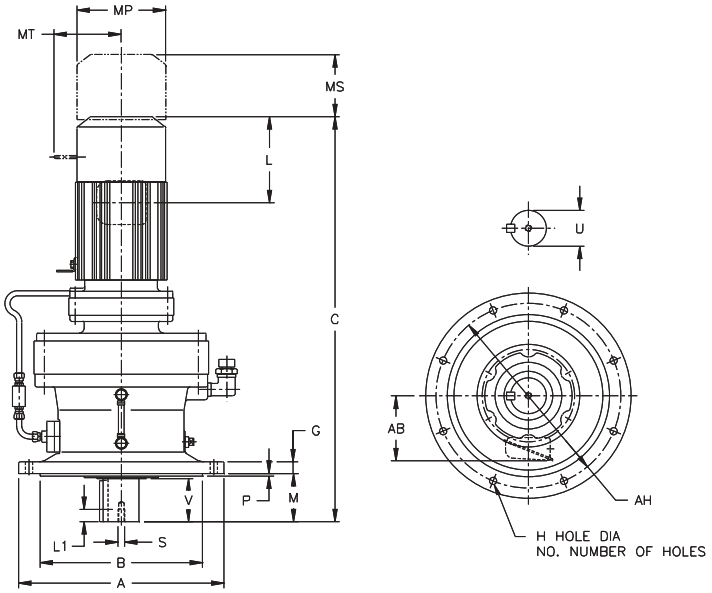

Metric (mm)[2]

Model CVVM	A	B f8	G	H	No.	M	P	AH
613□DC	260	200	15	11	6	76	4	230
614□DB	260	200	15	11	6	96	4	230
616□DC	340	270	20	11	6	89	4	310
617□DC	400	316	22	14	8	94	5	360
618□DB	430	345	22	18	8	110	5	390
619□DA	490	400	30	18	12	145	6	450
619□DB	490	400	30	18	12	145	6	450

Model CVVM	LOW SPEED SHAFT				
	U h6	V	S	L1	KEY
613□DC	50	61	M10	18	14 X 9 X 56
614□DB	50	81	M10	18	14 X 9 X 80
616□DC	60	80	M10	18	18 X 11 X 80
617□DC	70	84	M12	24	20 X 12 X 80
618□DB	80	100	M12	24	22 X 14 X 100
619□DA	95	125	M20	34	25 X 14 X 125
619□DB	95	125	M20	34	25 X 14 X 125

Model	Motor		Without Brake				Appx Wt (kg)	With Brake						Appx Wt (kg)
	kW	Pole	C	AB	L	MP		C	AB	L	MP	MS	MT	
CVVM02-613□DC	0.2	4	493	85	59	124	50	525	89	91	124	61	-	52
CVVM03-613□DC	0.25	4	493	85	59	124	50	525	89	91	124	61	-	52
CVVM05-613□DC	0.4	4	513	85	59	124	51	545	89	91	124	61	-	53
CVVM08-613□DC	0.55	4	554	114	97	148	55	597	142	140	148	93	106	58
CVVM1-613□DC	0.75	4	554	114	97	148	55	597	142	140	148	93	106	58
CVVM1H-613□DC	1.1	4	587	119	100	160	59	649	147	162	160	115	114	64
CVVM2-613□DC	1.5	4	587	119	100	160	59	649	147	162	160	115	114	64
CVVM3-613□DC	2.2	4	607	126	105	173	63	670	154	168	173	121	124	69

Notes: [1] 0 or 5 replaces □ depending on the model selected for the application. Please refer to the Gearmotor Selection Procedure and Tables in this section.
[2] The shaft dimensions shown above are hard metric sizes with metric keys. Units are available with shafting made to either DIN/ISO or JIS tolerances. Please consult factory for availability.

Dimensions shown are for reference only and are subject to change without notice, unless certified.
Certified prints are available after receipt of an order; consult factory.

CVVM-613□DC~619DB[1] (con't.)

Metric (mm)

Model	Motor		Without Brake				Appx Wt (kg)	With Brake						Appx Wt (kg)
	kW	Pole	C	AB	L	MP		C	AB	L	MP	MS	MT	
CVVM01-614□DB	0.1	4	457	85	35	119	46	492	89	70	124	49	-	48
CVVM02-614□DB	0.2	4	499	85	59	124	47	531	89	91	124	61	-	49
CVVM03-614□DB	0.25	4	499	85	59	124	47	531	89	91	124	61	-	49
CVVM05-614□DB	0.4	4	519	85	59	124	48	551	89	91	124	61	-	50
CVVM08-614□DB	0.55	4	560	114	97	148	52	603	142	140	148	93	106	55
CVVM1-614□DB	0.75	4	560	114	97	148	52	603	142	140	148	93	106	55
CVVM1H-614□DB	1.1	4	593	119	100	160	56	655	147	162	160	115	114	61
CVVM2-614□DB	1.5	4	593	119	100	160	56	655	147	162	160	115	114	61
CVVM05-616□DC	0.4	4	586	85	59	124	94	622	89	91	124	61	-	96
CVVM08-616□DC	0.55	4	626	114	97	148	98	669	142	140	148	93	106	101
CVVM1-616□DC	0.75	4	626	114	97	148	98	669	142	140	148	93	106	101
CVVM1H-616□DC	1.1	4	659	119	100	160	102	721	147	162	160	115	114	107
CVVM2-616□DC	1.5	4	659	119	100	160	102	721	147	162	160	115	114	107
CVVM3-616□DC	2.2	4	679	126	105	173	106	742	154	168	173	121	124	113
CVVM5-616□DC	3.7	4	702	147	127	212	116	774	170	199	212	132	157	126
CVVM8-616□DC	5.5	4	746	147	127	212	126	818	170	199	212	132	157	136
CVVM05-617□DC	0.4	4	633	85	59	124	129	669	89	91	124	61	-	131
CVVM08-617□DC	0.55	4	673	114	97	148	133	716	142	140	148	93	106	136
CVVM1-617□DC	0.75	4	673	114	97	148	133	716	142	140	148	93	106	136
CVVM1H-617□DC	1.1	4	706	119	100	160	137	768	147	162	160	115	114	142
CVVM2-617□DC	1.5	4	706	119	100	160	137	768	147	162	160	115	114	142
CVVM3-617□DC	2.2	4	726	126	105	173	141	789	154	168	173	121	124	148
CVVM5-617□DC	3.7	4	749	147	127	212	151	821	170	199	212	132	157	161
CVVM8-617□DC	5.5	4	793	147	127	212	161	865	170	199	212	132	157	171
CVVM1-618□DB	0.75	4	733	114	97	148	175	776	142	140	148	93	106	178
CVVM1H-618□DB	1.1	4	766	119	100	160	179	828	147	162	160	115	114	184
CVVM2-618□DB	1.5	4	766	119	100	160	179	828	147	162	160	115	114	184
CVVM3-618□DB	2.2	4	786	126	105	173	182	849	154	168	173	121	124	189
CVVM5-618□DB	3.7	4	809	147	127	212	192	881	170	199	212	132	157	202
CVVM8-618□DB	5.5	4	853	147	127	212	199	925	170	199	212	132	157	209
CVVM10-618□DB	7.5	4	876	188	143	251	214	971	188	238	251	170	182	232
CVVM15-618□DB	11	4	936	188	143	251	228	1031	188	238	251	170	182	246
CVVM1-619□DA	0.75	4	793	114	97	148	237	836	142	140	148	93	106	240
CVVM1H-619□DA	1.1	4	826	119	100	160	241	888	147	162	160	115	114	246
CVVM2-619□DA	1.5	4	826	119	100	160	241	888	147	162	160	115	114	246
CVVM3-619□DA	2.2	4	846	126	105	173	245	909	154	168	173	121	124	252
CVVM5-619□DA	3.7	4	869	147	127	212	255	941	170	199	212	132	157	265
CVVM8-619□DA	5.5	4	913	147	127	212	262	985	170	199	212	132	157	272
CVVM5-619□DB	3.7	4	885	147	127	212	262	957	170	199	212	132	157	272
CVVM8-619□DB	5.5	4	929	147	127	212	269	1001	170	199	212	132	157	279
CVVM10-619□DB	7.5	4	952	188	143	251	284	1047	188	238	251	170	182	302
CVVM15-619□DB	11	4	1012	188	143	251	298	1107	188	238	251	170	182	316
CVVM20-619□DB	15	4	1102	232	295	324	350	1192	232	385	324	220	-	383

Notes: [1] 0 or 5 replaces □ depending on the model selected for the application. Please refer to the Gearmotor Selection Procedure and Tables in this section.

Dimensions shown are for reference only and are subject to change without notice, unless certified.
Certified prints are available after receipt of an order; consult factory.

INTEGRAL VERTICAL V-FLANGE MOUNT
DOUBLE REDUCTION

CVVM-6205DA~6235DB

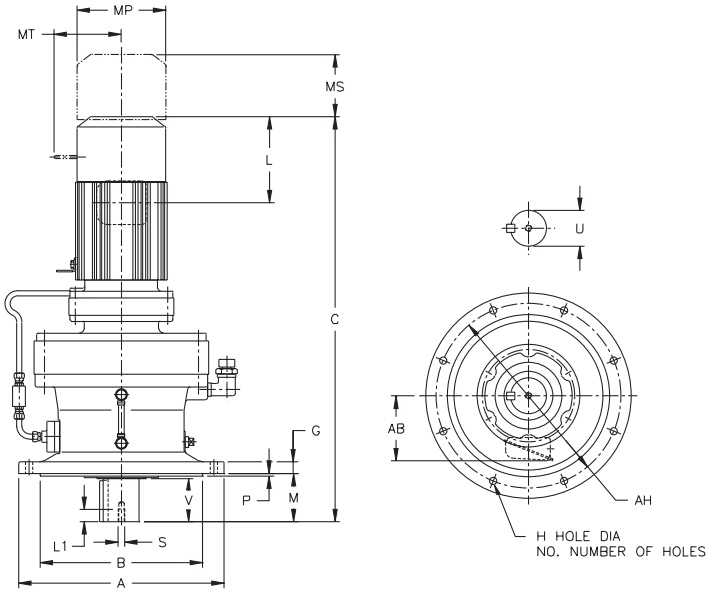

Inch (in)

Model CVVM	A	B	E	H	No.	M	P	AH
6205DAY	17.91	13.9739 13.9704	1.18	0.87	8	8.03	0.20	15.94
6205DBY	17.91	13.9739 13.9704	1.18	0.87	8	8.03	0.20	15.94
6215DAY	19.29	15.3519 15.3484	1.38	0.94	8	7.99	0.28	17.32
6215DBY	19.29	15.3519 15.3484	1.38	0.94	8	7.99	0.28	17.32
6225DAY	21.06	16.3359 16.3321	1.38	1.06	8	8.27	0.39	18.70
6225DBY	21.06	16.3359 16.3321	1.38	1.06	8	8.27	0.39	18.70
6235DAY	22.44	17.7139 17.7100	1.57	1.06	8	9.84	0.39	20.08
6235DBY	22.44	17.7139 17.7100	1.57	1.06	8	9.84	0.39	20.08

Model CVVM	LOW SPEED SHAFT				
	U*	V	S	L1	KEY
6205DAY	3.875	6.50	3/4-10UNC	1.34	1 X 1 X 6.50
6205DBY	3.875	6.50	3/4-10UNC	1.34	1 X 1 X 6.50
6215DAY	4.250	6.50	3/4-10UNC	1.34	1 X 1 X 6.50
6215DBY	4.250	6.50	3/4-10UNC	1.34	1 X 1 X 6.50
6225DAY	4.625	6.50	3/4-10UNC	1.34	1-1/4 X 7/8 X 6.5
6225DBY	4.625	6.50	3/4-10UNC	1.34	1-1/4 X 7/8 X 6.5
6235DAY	5.000	7.87	1-8UNC	1.61	1-1/4 X 7/8 X 7.87
6235DBY	5.000	7.87	1-8UNC	1.61	1-1/4 X 7/8 X 7.87

*** Shaft Tolerances:**

Shaft Nominal Diameter (inches)	Tolerances (inches)
2.000 (2) through 3.125 (3 1/8)	+0.0000/-0.0007
3.250 (3 1/4) through 4.625 (4 5/8)	+0.0000/-0.0009
4.750 (4 3/4) through 7.000 (7)	+0.0000/-0.0010

Model	Motor		Without Brake				Appx Wt (lb)	With Brake						Appx Wt (lb)
	HP	Pole	C	AB	L	MP		C	AB	L	MP	MS	MT	
CVVM1-6205DAY	1	4	32.83	4.49	3.82	5.83	558	34.53	5.59	5.51	5.83	3.66	4.17	564
CVVM2-6205DAY	1.5	4	34.13	4.69	3.94	6.30	567	36.57	5.79	6.38	6.30	4.53	4.49	578
CVVM3-6205DAY	3	4	34.92	4.96	4.13	6.81	576	37.36	6.06	6.61	6.81	4.76	4.88	591
CVVM5-6205DAY	5	4	35.83	5.79	5.00	8.35	598	38.66	6.69	7.83	8.35	5.20	6.18	620
CVVM8-6205DAY	7.5	4	37.56	5.79	5.00	8.35	613	40.39	6.69	7.83	8.35	5.20	6.18	635

Dimensions shown are for reference only and are subject to change without notice, unless certified.
Certified prints are available after receipt of an order; consult factory.

CVVM-6205DA~6235DB (con't.)

Inch (in)

Model	Motor		Without Brake				Appx Wt (lb)	With Brake						Appx Wt (lb)
	HP	Pole	C	AB	L	MP		C	AB	L	MP	MS	MT	
CVVM3-6205DBY	3	4	35.98	4.96	4.13	6.81	602	38.46	6.06	6.61	6.81	4.76	4.88	617
CVVM5-6205DBY	5	4	36.89	5.79	5.00	8.35	624	39.72	6.69	7.83	8.35	5.20	6.18	662
CVVM8-6205DBY	7.5	4	38.62	5.79	5.00	8.35	639	41.46	6.69	7.83	8.35	5.20	6.18	712
CVVM10-6205DBY	10	4	39.53	7.40	5.63	9.88	673	43.27	7.40	9.37	9.88	6.69	7.17	763
CVVM15-6205DBY	15	4	41.89	7.40	5.63	9.88	703	45.63	7.40	9.37	9.88	6.69	7.17	794
CVVM20-6205DBY	20	4	45.43	9.13	11.61	12.76	818	48.58	9.13	15.16	12.76	8.66	-	942
CVVM2-6215DAY	2	4	36.22	4.69	3.94	6.30	728	38.66	5.79	6.38	6.30	4.53	4.49	739
CVVM3-6215DAY	3	4	37.01	4.96	4.13	6.81	734	39.49	6.06	6.61	6.81	4.76	4.88	750
CVVM5-6215DAY	5	4	37.91	5.79	5.00	8.35	756	40.75	6.69	7.83	8.35	5.20	6.18	778
CVVM8-6215DAY	7.5	4	39.65	5.79	5.00	8.35	772	42.48	6.69	7.83	8.35	5.20	6.18	794
CVVM10-6215DAY	10	4	40.55	7.40	5.63	9.88	805	44.29	7.40	9.37	9.88	6.69	7.17	845
CVVM15-6215DAY	15	4	42.91	7.40	5.63	9.88	836	46.65	7.40	9.37	9.88	6.69	7.17	875
CVVM20-6215DAY	20	4	46.46	9.13	11.61	12.76	950	50.00	9.13	15.16	12.76	8.66	-	1023
CVVM10-6215DBY	10	4	41.73	7.40	5.63	9.88	880	45.47	7.40	9.37	9.88	6.69	7.17	917
CVVM15-6215DBY	15	4	44.09	7.40	5.63	9.88	911	47.83	7.40	9.37	9.88	6.69	7.17	948
CVVM20-6215DBY	20	4	47.44	9.13	11.61	12.76	1028	50.98	9.13	15.16	12.76	8.66	-	1100
CVVM25-6215DBY	25	4	51.18	11.69	13.39	15.51	1186	59.45	11.69	21.65	15.51	14.45	-	1283
CVVM30-6215DBY	30	4	51.18	11.69	13.39	15.51	1186	59.45	11.69	21.65	15.51	14.45	-	1283
CVVM2-6225DAY	2	4	37.87	4.69	3.94	6.30	924	40.31	5.79	6.38	6.30	4.53	4.49	935
CVVM3-6225DAY	3	4	38.66	4.96	4.13	6.81	931	41.14	6.06	6.61	6.81	4.76	4.88	946
CVVM5-6225DAY	5	4	39.57	5.79	5.00	8.35	953	42.40	6.69	7.83	8.35	5.20	6.18	975
CVVM8-6225DAY	7.5	4	41.30	5.79	5.00	8.35	968	44.13	6.69	7.83	8.35	5.20	6.18	990
CVVM10-6225DAY	10	4	42.20	7.40	5.63	9.88	1001	45.94	7.40	9.37	9.88	6.69	7.17	1041
CVVM15-6225DAY	15	4	44.57	7.40	5.63	9.88	1032	48.31	7.40	9.37	9.88	6.69	7.17	1069
CVVM20-6225DAY	20	4	48.11	9.13	11.61	12.76	1147	51.65	9.13	15.16	12.76	8.66	-	1217
CVVM10-6225DBY	10	4	44.29	7.40	5.63	9.88	1103	48.03	7.40	9.37	9.88	6.69	7.17	1142
CVVM15-6225DBY	15	4	46.65	7.40	5.63	9.88	1133	50.39	7.40	9.37	9.88	6.69	7.17	1173
CVVM20-6225DBY	20	4	49.80	9.13	11.61	12.76	1252	53.35	9.13	15.16	12.76	8.66	-	1325
CVVM25-6225DBY	25	4	53.54	11.69	13.39	15.51	1446	61.81	11.69	21.65	15.51	14.45	-	1499
CVVM30-6225DBY	30	4	53.54	11.69	13.39	15.51	1446	61.81	11.69	21.65	15.51	14.45	-	1499
CVVM40-6225DBY	40	4	53.54	11.69	13.39	15.51	1484	61.81	11.69	21.65	15.51	14.57	-	1579
CVVM3-6235DAY	3	4	42.09	4.96	4.13	6.81	1151	44.53	6.06	6.61	6.81	4.76	4.88	1164
CVVM5-6235DAY	5	4	42.95	5.79	5.00	8.35	1171	45.79	6.69	7.83	8.35	5.20	6.18	1193
CVVM8-6235DAY	7.5	4	44.69	5.79	5.00	8.35	1186	47.52	6.69	7.83	8.35	5.20	6.18	1208
CVVM10-6235DAY	10	4	45.79	7.40	5.63	9.88	1222	49.53	7.40	9.37	9.88	6.69	7.17	1259
CVVM15-6235DAY	15	4	48.15	7.40	5.63	9.88	1252	51.89	7.40	9.37	9.88	6.69	7.17	1290
CVVM20-6235DAY	20	4	51.54	9.13	11.61	12.76	1369	55.04	9.13	15.16	12.76	8.66	-	1442
CVVM25-6235DAY	25	4	55.24	11.69	13.39	15.51	1528	63.50	11.69	21.65	15.51	14.45	-	1625
CVVM30-6235DAY	30	4	55.24	11.69	13.39	15.51	1528	63.50	11.69	21.65	15.51	14.45	-	1625
CVVM40-6235DBY	40	4	56.10	11.69	13.39	15.51	1629	64.37	11.69	21.65	15.51	14.57	-	1724
CVVM50-6235DBY	50	4	60.63	11.69	16.93	15.51	1735	69.09	11.69	25.39	15.51	17.52	-	1949

Dimensions shown are for reference only and are subject to change without notice, unless certified.
Certified prints are available after receipt of an order; consult factory.

INTEGRAL VERTICAL V-FLANGE MOUNT
DOUBLE REDUCTION

CVVM-6205DA~6235DB

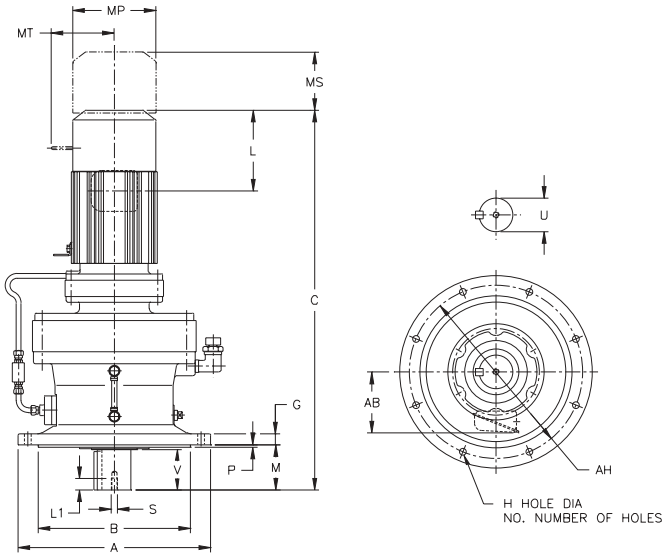

Metric (mm)[1]

Model CVVM	A	B f8	G	H	No.	M	P	AH
6205DA	455	355	30	22	8	204	5	405
6205DB	455	355	30	22	8	204	5	405
6215DA	490	390	35	24	8	203	7	440
6215DB	490	390	35	24	8	203	7	440
6225DA	535	415	35	27	8	210	10	475
6225DB	535	415	35	27	8	210	10	475
6235DA	570	450	40	27	8	250	10	510
6235DB	570	450	40	27	8	250	10	510

Model CVVM	LOW SPEED SHAFT				
	U h6	V	S	L1	KEY
6205DA	100	165	M20	34	28 X 16 X 165
6205DB	100	165	M20	34	28 X 16 X 165
6215DA	110	165	M20	34	28 X 16 X 165
6215DB	110	165	M20	34	28 X 16 X 165
6225DA	120	165	M20	34	32 X 18 X 165
6225DB	120	165	M20	34	32 X 18 X 165
6235DA	130	200	M24	41	32 X 18 X 200
6235DB	130	200	M24	41	32 X 18 X 200

Model	Motor		Without Brake				Appx Wt (kg)	With Brake						Appx Wt (kg)
	kW	Pole	C	AB	L	MP		C	AB	L	MP	MS	MT	
CVVM1-6205DA	0.75	4	834	114	97	148	253	877	142	140	148	93	106	256
CVVM2-6205DA	1.5	4	867	119	100	160	257	929	147	162	160	115	114	262
CVVM3-6205DA	2.2	4	887	126	105	173	261	949	154	168	173	121	124	268
CVVM5-6205DA	3.7	4	910	147	127	212	271	982	170	199	212	132	157	281
CVVM8-6205DA	5.5	4	954	147	127	212	278	1026	170	199	212	132	157	288
CVVM3-6205DB	2.2	4	914	126	105	173	273	977	154	168	173	121	124	280
CVVM5-6205DB	3.7	4	937	147	127	212	283	1009	170	199	212	132	157	300
CVVM8-6205DB	5.5	4	981	147	127	212	290	1053	170	199	212	132	157	323
CVVM10-6205DB	7.5	4	1004	188	143	251	305	1099	188	238	251	170	182	346
CVVM15-6205DB	11	4	1064	188	143	251	319	1159	188	238	251	170	182	360
CVVM20-6205DB	15	4	1154	232	295	324	371	1234	232	385	324	220	-	427

Note: [1] The shaft dimensions shown above are hard metric sizes with metric keys. Units are available with shafting made to either DIN/ISO or JIS tolerances. Please consult factory for availability.

Dimensions shown are for reference only and are subject to change without notice, unless certified.
Certified prints are available after receipt of an order; consult factory.

CVVM-6205DA~6235DB (con't.)

Metric (mm)

Model	Motor		Without Brake				Appx Wt (kg)	With Brake						Appx Wt (kg)
	kW	Pole	C	AB	L	MP		C	AB	L	MP	MS	MT	
CVVM2-6215DA	1.5	4	920	119	100	160	330	982	147	162	160	115	114	335
CVVM3-6215DA	2.2	4	940	126	105	173	333	1003	154	168	173	121	124	340
CVVM5-6215DA	3.7	4	963	147	127	212	343	1035	170	199	212	132	157	353
CVVM8-6215DA	5.5	4	1007	147	127	212	350	1079	170	199	212	132	157	360
CVVM10-6215DA	7.5	4	1030	188	143	251	365	1125	188	238	251	170	182	383
CVVM15-6215DA	11	4	1090	188	143	251	379	1185	188	238	251	170	182	397
CVVM20-6215DA	15	4	1180	232	295	324	431	1270	232	385	324	220	-	464
CVVM10-6215DB	7.5	4	1060	188	143	251	399	1155	188	238	251	170	182	416
CVVM15-6215DB	11	4	1120	188	143	251	413	1215	188	238	251	170	182	430
CVVM20-6215DB	15	4	1205	232	295	324	466	1295	232	385	324	220	-	499
CVVM25-6215DB	18.5	4	1300	297	340	394	538	1510	297	550	394	367	-	582
CVVM30-6215DB	22	4	1300	297	340	394	538	1510	297	550	394	367	-	582
CVVM2-6225DA	1.5	4	962	119	100	160	419	1024	147	162	160	115	114	424
CVVM3-6225DA	2.2	4	982	126	105	173	422	1045	154	168	173	121	124	429
CVVM5-6225DA	3.7	4	1005	147	127	212	432	1077	170	199	212	132	157	442
CVVM8-6225DA	5.5	4	1049	147	127	212	439	1121	170	199	212	132	157	449
CVVM10-6225DA	7.5	4	1072	188	143	251	454	1167	188	238	251	170	182	472
CVVM15-6225DA	11	4	1132	188	143	251	468	1227	188	238	251	170	182	485
CVVM20-6225DA	15	4	1222	232	295	324	520	1312	232	385	324	220	-	552
CVVM10-6225DB	7.5	4	1125	188	143	251	500	1220	188	238	251	170	182	518
CVVM15-6225DB	11	4	1185	188	143	251	514	1280	188	238	251	170	182	532
CVVM20-6225DB	15	4	1265	232	295	324	568	1355	232	385	324	220	-	601
CVVM25-6225DB	18.5	4	1360	297	340	394	656	1570	297	550	394	367	-	680
CVVM30-6225DB	22	4	1360	297	340	394	656	1570	297	550	394	367	-	680
CVVM40-6225DB	30	4	1360	297	340	394	673	1570	297	550	394	370	-	716
CVVM3-6235DA	2.2	4	1069	126	105	173	522	1131	154	168	173	121	124	528
CVVM5-6235DA	3.7	4	1091	147	127	212	531	1163	170	199	212	132	157	541
CVVM8-6235DA	5.5	4	1135	147	127	212	538	1207	170	199	212	132	157	548
CVVM10-6235DA	7.5	4	1163	188	143	251	554	1258	188	238	251	170	182	571
CVVM15-6235DA	11	4	1223	188	143	251	568	1318	188	238	251	170	182	585
CVVM20-6235DA	15	4	1309	232	295	324	621	1398	232	385	324	220	-	654
CVVM25-6235DA	18.5	4	1403	297	340	394	693	1613	297	550	394	367	-	737
CVVM30-6235DA	22	4	1403	297	340	394	693	1613	297	550	394	367	-	737
CVVM40-6235DB	30	4	1425	297	340	394	739	1635	297	550	394	370	-	782
CVVM50-6235DB	37	4	1540	297	430	394	787	1755	297	645	394	445	-	884

Dimensions shown are for reference only and are subject to change without notice, unless certified.
Certified prints are available after receipt of an order; consult factory.

INTEGRAL VERTICAL V-FLANGE MOUNT
DOUBLE REDUCTION

CVVM-6245DA~6275DA

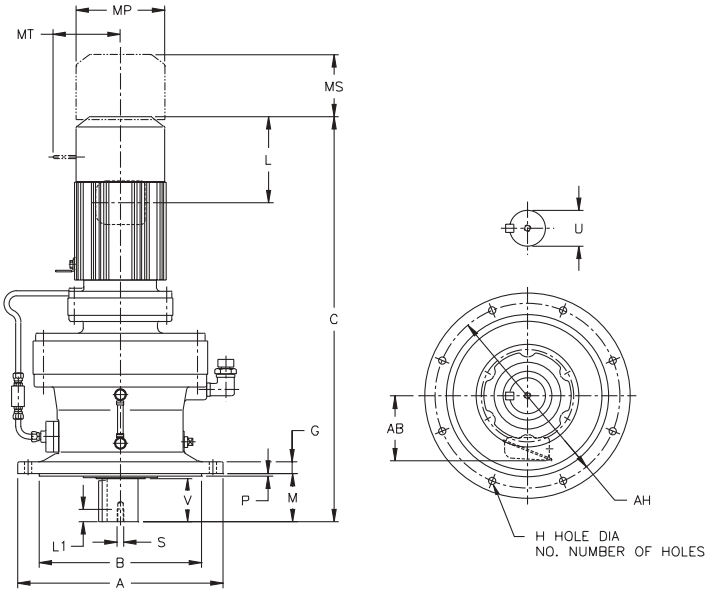

Inch (in)

Model CVVM	A	B	E	H	No.	M	P	AH
6245DAY	25.00	19.0918 19.0880	1.57	1.30	8	9.84	0.39	22.05
6245DBY	25.00	19.0918 19.0880	1.57	1.30	8	9.84	0.39	22.05
6255DAY	26.97	21.0600 21.0557	1.77	1.30	8	11.61	0.39	24.02
6255DBY	26.97	21.0600 21.0557	1.77	1.30	8	11.61	0.39	24.02
6265DAY	29.53	22.4380 22.4336	1.97	1.54	8	14.17	0.39	25.98
6275DAY	45.67	35.4297 35.4242	2.36	1.54	8	13.98	0.39	40.16

Model CVVM	LOW SPEED SHAFT				
	U*	V	S	L1	KEY
6245DAY	5.000	7.87	1-8UNC	1.61	1-1/4 X 7/8 X 7.87
6245DBY	5.000	7.87	1-8UNC	1.61	1-1/4 X 7/8 X 7.87
6255DAY	6.250	9.45	1-1/4-7UNC	1.93	1-1/2 X 1 X 9.45
6255DBY	6.250	9.45	1-1/4-7UNC	1.93	1-1/2 X 1 X 9.45
6265DAY	6.625	11.81	1-1/4-7UNC	1.93	1-3/4 X 1-1/4 X 11.8
6275DAY	7.000	12.60	1-1/4-7UNC	2.05	1-3/4 X 1-1/4 X 13

*** Shaft Tolerances:**

Shaft Nominal Diameter (inches)	Tolerances (inches)
2.000 (2) through 3.125 (3 1/8)	+0.0000/-0.0007
3.250 (3 1/4) through 4.625 (4 5/8)	+0.0000/-0.0009
4.750 (4 3/4) through 7.000 (7)	+0.0000/-0.0010

Dimensions shown are for reference only and are subject to change without notice, unless certified.
Certified prints are available after receipt of an order; consult factory.

CVVM-6245DA~6275DA (con't.)

Inch (in)

Model	Motor		Without Brake				Appx Wt (lb)	With Brake						Appx Wt (lb)
	HP	Pole	C	AB	L	MP		C	AB	L	MP	MS	MT	
CVVM3-6245DAY	3	4	43.54	4.96	4.13	6.81	1358	46.02	6.06	6.61	6.81	4.76	4.88	1372
CVVM5-6245DAY	5	4	44.45	5.79	5.00	8.35	1378	47.28	6.69	7.83	8.35	5.20	6.18	1400
CVVM8-6245DAY	7.5	4	46.18	5.79	5.00	8.35	1394	49.02	6.69	7.83	8.35	5.20	6.18	1416
CVVM10-6245DAY	10	4	47.28	7.40	5.63	9.88	1429	51.02	7.40	9.37	9.88	6.69	7.17	1466
CVVM15-6245DAY	15	4	49.65	7.40	5.63	9.88	1460	53.39	7.40	9.37	9.88	6.69	7.17	1497
CVVM20-6245DAY	20	4	52.99	9.13	11.61	12.76	1577	56.54	9.13	15.16	12.76	8.66	-	1649
CVVM25-6245DAY	25	4	56.73	11.69	13.39	15.51	1735	65.00	11.69	21.65	15.51	14.45	-	1852
CVVM30-6245DAY	30	4	56.73	11.69	13.39	15.51	1735	65.00	11.69	21.65	15.51	14.45	-	1852
CVVM20-6245DBY	20	4	53.82	9.13	11.61	12.76	1652	57.36	9.13	15.16	12.76	8.66	-	1713
CVVM30-6245DBY	30	4	57.56	11.69	13.39	15.51	1788	65.83	11.69	21.65	15.51	14.45	-	1901
CVVM40-6245DBY	40	4	57.56	11.69	13.39	15.51	1826	65.83	11.69	21.65	15.51	14.57	-	1921
CVVM50-6245DBY	50	4	62.09	11.69	16.93	15.51	1932	70.55	11.69	25.39	15.51	17.52	-	2145
CVVM5-6255DAY	5	4	50.55	5.79	5.00	8.35	2086	53.39	6.69	7.83	8.35	5.20	6.18	2108
CVVM8-6255DAY	7.5	4	52.28	5.79	5.00	8.35	2101	55.12	6.69	7.83	8.35	5.20	6.18	2123
CVVM10-6255DAY	10	4	52.99	7.40	5.63	9.88	2134	56.73	7.40	9.37	9.88	6.69	7.17	2168
CVVM15-6255DAY	15	4	55.35	7.40	5.63	9.88	2165	59.09	7.40	9.37	9.88	6.69	7.17	2198
CVVM20-6255DAY	20	4	58.50	9.13	11.61	12.76	2293	62.05	9.13	15.16	12.76	8.66	-	2370
CVVM25-6255DAY	25	4	62.24	11.69	13.39	15.51	2437	70.51	11.69	21.65	15.51	14.45	-	2549
CVVM30-6255DAY	30	4	62.24	11.69	13.39	15.51	2437	70.51	11.69	21.65	15.51	14.45	-	2549
CVVM40-6255DAY	40	4	62.24	11.69	13.39	15.51	2478	70.51	11.69	21.65	15.51	14.57	-	2573
CVVM25-6255DBY	25	4	63.11	11.69	13.39	15.51	2602	71.38	11.69	21.65	15.51	14.45	-	2714
CVVM30-6255DBY	30	4	63.11	11.69	13.39	15.51	2602	71.38	11.69	21.65	15.51	14.45	-	2714
CVVM40-6255DBY	40	4	63.11	11.69	13.39	15.51	2635	71.38	11.69	21.65	15.51	14.57	-	2730
CVVM50-6255DBY	50	4	67.64	11.69	16.93	15.51	2719	75.91	11.69	25.39	15.51	17.52	-	2933
CVVM60-6255DBY	60	4	67.64	11.69	16.93	15.51	2719	75.91	11.69	25.39	15.51	17.52	-	2933
CVVM8-6265DAY	7.5	4	58.27	5.79	5.00	8.35	2855	61.10	6.69	7.83	8.35	5.20	6.18	2878
CVVM10-6265DAY	10	4	58.78	7.40	5.63	9.88	2884	62.52	7.40	9.37	9.88	6.69	7.17	2928
CVVM15-6265DAY	15	4	61.14	7.40	5.63	9.88	2922	64.88	7.40	9.37	9.88	6.69	7.17	2955
CVVM20-6265DAY	20	4	63.70	9.13	11.61	12.76	3032	67.24	9.13	15.16	12.76	8.66	-	3109
CVVM25-6265DAY	25	4	67.44	11.69	13.39	15.51	3197	75.71	11.69	21.65	15.51	14.45	-	3296
CVVM30-6265DAY	30	4	67.44	11.69	13.39	15.51	3197	75.71	11.69	21.65	15.51	14.45	-	3296
CVVM40-6265DAY	40	4	67.44	11.69	13.39	15.51	3230	75.71	11.69	21.65	15.51	14.57	-	3325
CVVM50-6265DAY	50	4	71.97	11.69	16.93	15.51	3308	80.43	11.69	25.39	15.51	17.52	-	3513
CVVM60-6265DAY	60	4	71.97	11.69	16.93	15.51	3308	80.43	11.69	25.39	15.51	17.52	-	3513
CVVM10-6275DAY	10	4	69.06	7.40	5.63	9.88	5938	72.80	7.40	9.37	9.88	6.69	7.17	5982
CVVM15-6275DAY	15	4	71.42	7.40	5.63	9.88	5969	75.16	7.40	9.37	9.88	6.69	7.17	6002
CVVM20-6275DAY	20	4	73.98	9.13	11.61	12.76	6086	77.52	9.13	15.16	12.76	8.66	-	6163
CVVM25-6275DAY	25	4	77.72	11.69	13.39	15.51	6251	85.98	11.69	21.65	15.51	14.45	-	6350
CVVM30-6275DAY	30	4	77.72	11.69	13.39	15.51	6251	85.98	11.69	21.65	15.51	14.45	-	6350
CVVM40-6275DAY	40	4	77.72	11.69	13.39	15.51	6284	85.98	11.69	21.65	15.51	14.57	-	6379
CVVM50-6275DAY	50	4	82.24	11.69	16.93	15.51	6361	90.71	11.69	25.39	15.51	17.52	-	6566
CVVM60-6275DAY	60	4	82.24	11.69	16.93	15.51	6361	90.71	11.69	25.39	15.51	17.52	-	6566

Dimensions shown are for reference only and are subject to change without notice, unless certified.
Certified prints are available after receipt of an order; consult factory.

INTEGRAL VERTICAL V-FLANGE MOUNT
DOUBLE REDUCTION

CVVM-6245DA~6275DA

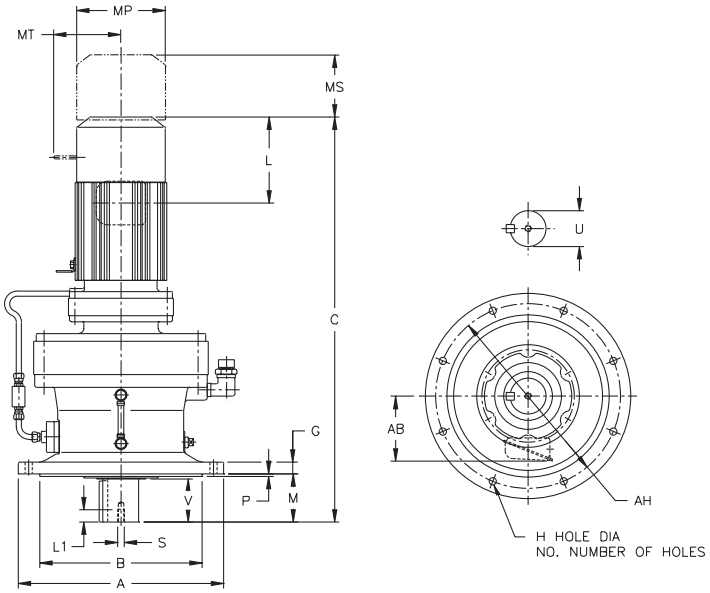

Metric (mm)[1]

Model CVVM	A	B f8	G	H	No.	M	P	AH
6245DA	635	485	40	33	8	250	10	560
6245DB	635	485	40	33	8	250	10	560
6255DA	685	535	45	33	8	295	10	610
6255DB	685	535	45	33	8	295	10	610
6265DA	750	570	50	39	8	360	10	660
6275DA	1160	900	60	39	8	355	10	1020

Model CVVM	LOW SPEED SHAFT				
	U h6	V	S	L1	KEY
6245DA	140	200	M24	41	36 X 20 X 200
6245DB	140	200	M24	41	36 X 20 X 200
6255DA	160	240	M30	49	40 X 22 X 240
6255DB	160	240	M30	49	40 X 22 X 240
6265DA	170	300	M30	49	40 X 22 X 300
6275DA	180	320	M30	52	45 X 25 X 320

Model	Motor		Without Brake				Appx Wt (kg)	With Brake						Appx Wt (kg)
	kW	Pole	C	AB	L	MP		C	AB	L	MP	MS	MT	
CVVM3-6245DA	2.2	4	1106	126	105	173	616	1169	154	168	173	121	124	622
CVVM5-6245DA	3.7	4	1129	147	127	212	625	1201	170	199	212	132	157	635
CVVM8-6245DA	5.5	4	1173	147	127	212	632	1245	170	199	212	132	157	642
CVVM10-6245DA	7.5	4	1201	188	143	251	648	1296	188	238	251	170	182	665
CVVM15-6245DA	11	4	1261	188	143	251	662	1356	188	238	251	170	182	679
CVVM20-6245DA	15	4	1346	232	295	324	715	1436	232	385	324	220	-	748
CVVM25-6245DA	18.5	4	1441	297	340	394	787	1651	297	550	394	367	-	840
CVVM30-6245DA	22	4	1441	297	340	394	787	1651	297	550	394	367	-	840
CVVM20-6245DB	15	4	1367	232	295	324	749	1457	232	385	324	220	-	777
CVVM30-6245DB	22	4	1462	297	340	394	811	1672	297	550	394	367	-	862
CVVM40-6245DB	30	4	1462	297	340	394	828	1672	297	550	394	370	-	871
CVVM50-6245DB	37	4	1577	297	430	394	876	1792	297	645	394	445	-	973

Note: [1] The shaft dimensions shown above are hard metric sizes with metric keys. Units are available with shafting made to either DIN/ISO or JIS tolerances. Please consult factory for availability.

Dimensions shown are for reference only and are subject to change without notice, unless certified.
Certified prints are available after receipt of an order; consult factory.

CVVM-6165DC~6275DA (con't.)

Metric (mm)

Model	Motor		Without Brake				Appx Wt (kg)	With Brake						Appx Wt (kg)
	kW	Pole	C	AB	L	MP		C	AB	L	MP	MS	MT	
CVVM5-6255DA	3.7	4	1284	147	127	212	946	1356	170	199	212	132	157	956
CVVM8-6255DA	5.5	4	1328	147	127	212	953	1400	170	199	212	132	157	963
CVVM10-6255DA	7.5	4	1346	188	143	251	968	1441	188	238	251	170	182	983
CVVM15-6255DA	11	4	1406	188	143	251	982	1501	188	238	251	170	182	997
CVVM20-6255DA	15	4	1486	232	295	324	1040	1576	232	385	324	220	-	1075
CVVM25-6255DA	18.5	4	1581	297	340	394	1105	1791	297	550	394	367	-	1156
CVVM30-6255DA	22	4	1581	297	340	394	1105	1791	297	550	394	367	-	1156
CVVM40-6255DA	30	4	1581	297	340	394	1124	1791	297	550	394	370	-	1167
CVVM25-6255DB	18.5	4	1603	297	340	394	1180	1813	297	550	394	367	-	1231
CVVM30-6255DB	22	4	1603	297	340	394	1180	1813	297	550	394	367	-	1231
CVVM40-6255DB	30	4	1603	297	340	394	1195	1813	297	550	394	370	-	1238
CVVM50-6255DB	37	4	1718	297	430	394	1233	1928	297	645	394	445	-	1330
CVVM60-6255DB	45	4	1718	297	430	394	1233	1928	297	645	394	445	-	1330
CVVM8-6265DA	5.5	4	1480	147	127	212	1295	1552	170	199	212	132	157	1305
CVVM10-6265DA	7.5	4	1493	188	143	251	1308	1588	188	238	251	170	182	1328
CVVM15-6265DA	11	4	1553	188	143	251	1325	1648	188	238	251	170	182	1340
CVVM20-6265DA	15	4	1618	232	295	324	1375	1708	232	385	324	220	-	1410
CVVM25-6265DA	18.5	4	1713	297	340	394	1450	1923	297	550	394	367	-	1495
CVVM30-6265DA	22	4	1713	297	340	394	1450	1923	297	550	394	367	-	1495
CVVM40-6265DA	30	4	1713	297	340	394	1465	1923	297	550	394	370	-	1508
CVVM50-6265DA	37	4	1828	297	430	394	1500	2043	297	645	394	445	-	1593
CVVM60-6265DA	45	4	1828	297	430	394	1500	2043	297	645	394	445	-	1593
CVVM10-6275DA	7.5	4	1754	188	143	251	2693	1849	188	238	251	170	182	2713
CVVM15-6275DA	11	4	1814	188	143	251	2707	1909	188	238	251	170	182	2722
CVVM20-6275DA	15	4	1879	232	295	324	2760	1969	232	385	324	220	-	2795
CVVM25-6275DA	18.5	4	1974	297	340	394	2835	2184	297	550	394	367	-	2880
CVVM30-6275DA	22	4	1974	297	340	394	2835	2184	297	550	394	367	-	2880
CVVM40-6275DA	30	4	1974	297	340	394	2850	2184	297	550	394	370	-	2893
CVVM50-6275DA	37	4	2089	297	430	394	2885	2304	297	645	394	445	-	2978
CVVM60-6275DA	45	4	2089	297	430	394	2885	2304	297	645	394	445	-	2978

Dimensions shown are for reference only and are subject to change without notice, unless certified.
Certified prints are available after receipt of an order; consult factory.

INTEGRAL F-FLANGE MOUNT
SINGLE REDUCTION

CNFM-606□~612□[1]

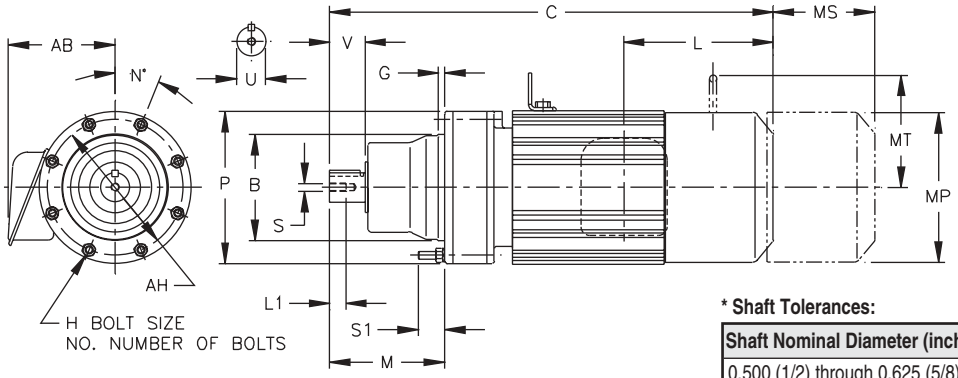

*** Shaft Tolerances:**

Shaft Nominal Diameter (inches)	Tolerances (inches)
0.500 (1/2) through 0.625 (5/8)	+0.0000/-0.0004
0.750 (3/4) through 1.125 (1 1/8)	+0.0000/-0.0005
1.25 (1 1/4) through 1.875 (1 7/8)	+0.0000/-0.0006

Inch (in)

Model CNFM	B	G	H	NO	M	N	P	Q	S1	AH
606□Y	3.1492 3.1485	0.16	0.26	6	2.72	60	4.33	M6	0.83	3.86
607□Y	3.1492 3.1485	0.16	0.26	6	2.91	60	4.33	M6	0.83	3.86
608□Y	3.7397 3.7388	0.20	0.35	8	3.58	22.5	5.28	M8	1.06	4.65
609□Y	4.1334 4.1325	0.24	0.35	8	4.49	22.5	5.91	M8	1.14	5.28
610□Y	4.1334 4.1325	0.24	0.35	8	4.49	22.5	5.91	M8	1.10	5.28
611□Y	4.5271 4.5262	0.24	0.35	8	4.65	22.5	6.38	M8	1.02	5.75
612□Y	5.5113 5.5103	0.55	0.43	6	5.47	60	8.03	M10	1.30	7.09

Model CNFM	LOW SPEED SHAFT				
	U*	V	S	L1	KEY
606□Y	0.500	0.98	10-32UNF	0.63	1/8 X 1/8 X .79
607□Y	0.750	1.18	12-28UNF	0.63	3/16 X 3/16 X 1.06
608□Y	0.875	1.38	12-28UNF	0.63	3/16 X 3/16 X 1.18
609□Y	1.125	1.38	5/16-18UNC	0.79	1/4 X 1/4 X 1.18
610□Y	1.125	1.38	5/16-18UNC	0.79	1/4 X 1/4 X 1.18
611□Y	1.250	1.77	5/16-18UNC	0.79	1/4 X 1/4 X 1.46
612□Y	1.500	2.17	5/16-18UNC	0.79	3/8 X 3/8 X 1.77

Note: [1] 0 or 5 replaces □ depending on the model selected for the application. Please refer to the Gearmotor Selection Procedure and Tables in this section.

Dimensions shown are for reference only and are subject to change without notice, unless certified. Certified prints are available after receipt of an order; consult factory.

CNFM-606□~612□[1] (con't.)

Inch (in)

Model	Motor		Without Brake				Appx Wt (lb)	With Brake						Appx Wt (lb)
	HP	Pole	C	AB	L	MP		C	AB	L	MP	MS	MT	
CNFM01-606□Y	1/8	4	8.90	3.35	1.38	4.69	12	10.28	3.50	2.76	4.88	1.93	-	15
CNFM02-606□Y	1/4	4	10.55	3.35	2.32	4.88	14	11.81	3.50	3.58	4.88	2.40	-	18
CNFM03-606□Y	1/3	4	10.55	3.35	2.32	4.88	14	11.81	3.50	3.58	4.88	2.40	-	18
CNFM01-607□Y	1/8	4	9.13	3.35	1.38	4.69	14	10.51	3.50	2.76	4.88	1.93	-	17
CNFM02-607□Y	1/4	4	10.79	3.35	2.32	4.88	17	12.05	3.50	3.58	4.88	2.40	-	19
CNFM03-607□Y	1/3	4	10.79	3.35	2.32	4.88	17	12.05	3.50	3.58	4.88	2.40	-	19
CNFM05-607□Y	1/2	4	11.57	3.35	2.32	4.88	19	12.83	3.50	3.58	4.88	2.40	-	21
CNFM01-608□Y	1/8	4	10.16	3.35	1.38	4.69	20	11.54	3.50	2.76	4.88	1.93	-	22
CNFM02-608□Y	1/4	4	11.81	3.35	2.32	4.88	22	13.07	3.50	3.58	4.88	2.40	-	24
CNFM03-608□Y	1/3	4	11.81	3.35	2.32	4.88	22	13.07	3.50	3.58	4.88	2.40	-	24
CNFM05-608□Y	1/2	4	12.60	3.35	2.32	4.88	26	13.86	3.50	3.58	4.88	2.40	-	29
CNFM08-608□Y	3/4	4	14.21	4.49	3.82	5.83	35	15.91	5.59	5.51	5.83	3.66	4.17	37
CNFM1-608□Y	1	4	14.21	4.49	3.82	5.83	35	15.91	5.59	5.51	5.83	3.66	4.17	37
CNFM01-609□Y	1/8	4	10.87	3.35	1.38	4.69	22	12.24	3.50	2.76	4.88	1.93	-	26
CNFM02-609□Y	1/4	4	12.52	3.35	2.32	4.88	24	13.78	3.50	3.58	4.88	2.40	-	29
CNFM03-609□Y	1/3	4	12.52	3.35	2.32	4.88	24	13.78	3.50	3.58	4.88	2.40	-	29
CNFM05-609□Y	1/2	4	13.31	3.35	2.32	4.88	26	14.57	3.50	3.58	4.88	2.40	-	31
CNFM08-609□Y	3/4	4	14.92	4.49	3.82	5.83	35	16.61	5.59	5.51	5.83	3.66	4.17	40
CNFM1-609□Y	1	4	14.92	4.49	3.82	5.83	35	16.61	5.59	5.51	5.83	3.66	4.17	40
CNFM1H-609□Y	1.5	4	16.22	4.69	3.94	6.30	44	18.66	5.79	6.38	6.30	4.53	4.49	53
CNFM2-609□Y	2	4	16.22	4.69	3.94	6.30	44	18.66	5.79	6.38	6.30	4.53	4.49	53
CNFM02-610□Y	1/4	4	13.07	3.35	2.32	4.88	29	14.33	3.50	3.58	4.88	2.40	-	33
CNFM03-610□Y	1/3	4	13.07	3.35	2.32	4.88	29	14.33	3.50	3.58	4.88	2.40	-	33
CNFM05-610□Y	1/2	4	13.86	3.35	2.32	4.88	31	15.12	3.50	3.58	4.88	2.40	-	35
CNFM08-610□Y	3/4	4	15.47	4.49	3.82	5.83	40	17.17	5.59	5.51	5.83	3.66	4.17	46
CNFM1-610□Y	1	4	15.47	4.49	3.82	5.83	40	17.17	5.59	5.51	5.83	3.66	4.17	46
CNFM1H-610□Y	1.5	4	16.77	4.69	3.94	6.30	49	19.21	5.79	6.38	6.30	4.53	4.49	60
CNFM2-610□Y	2	4	16.77	4.69	3.94	6.30	49	19.21	5.79	6.38	6.30	4.53	4.49	60
CNFM3-610□Y	3	4	17.56	4.96	4.13	6.81	57	20.04	6.06	6.61	6.81	4.76	4.88	71
CNFM05-612□Y	1/2	4	14.29	3.35	2.32	4.88	35	15.51	3.50	3.58	4.88	2.40	-	37
CNFM08-612□Y	3/4	4	15.87	4.49	3.82	5.83	40	17.80	5.59	5.51	5.83	3.66	4.17	49
CNFM1-612□Y	1	4	15.87	4.49	3.82	5.83	42	17.80	5.59	5.51	5.83	3.66	4.17	49
CNFM1H-612□Y	1.5	4	17.17	4.69	3.94	6.30	49	19.41	5.79	6.38	6.30	4.53	4.49	60
CNFM2-612□Y	2	4	17.17	4.69	3.94	6.30	49	19.41	5.79	6.38	6.30	4.53	4.49	60
CNFM3-612□Y	3	4	17.95	4.96	4.13	6.81	57	20.43	6.06	6.61	6.81	4.76	4.88	71
CNFM5-612□Y	5	4	19.33	5.79	5.00	8.35	79	22.17	6.69	7.83	8.35	5.20	6.18	101
CNFM08-612□Y	3/4	4	16.65	4.49	3.82	5.83	60	18.35	5.59	5.51	5.83	3.66	4.17	66
CNFM1-612□Y	1	4	16.65	4.49	3.82	5.83	60	18.35	5.59	5.51	5.83	3.66	4.17	66
CNFM1H-612□Y	1.5	4	17.95	4.69	3.94	6.30	68	20.39	5.79	6.38	6.30	4.53	4.49	79
CNFM2-612□Y	2	4	17.95	4.69	3.94	6.30	68	20.39	5.79	6.38	6.30	4.53	4.49	79
CNFM3-612□Y	3	4	18.74	4.96	4.13	6.81	77	21.22	6.06	6.61	6.81	4.76	4.88	93
CNFM5-612□Y	5	4	19.65	5.79	5.00	8.35	99	22.48	6.69	7.83	8.35	5.20	6.18	121
CNFM8-612□Y	7.5	4	21.38	5.79	5.00	8.35	115	24.21	6.69	7.83	8.35	5.20	6.18	137

Note: [1] 0 or 5 replaces □ depending on the model selected for the application. Please refer to the Gearmotor Selection Procedure and Tables in this section.

INTEGRAL F-FLANGE MOUNT
SINGLE REDUCTION

CNFM-606□~612□[1]

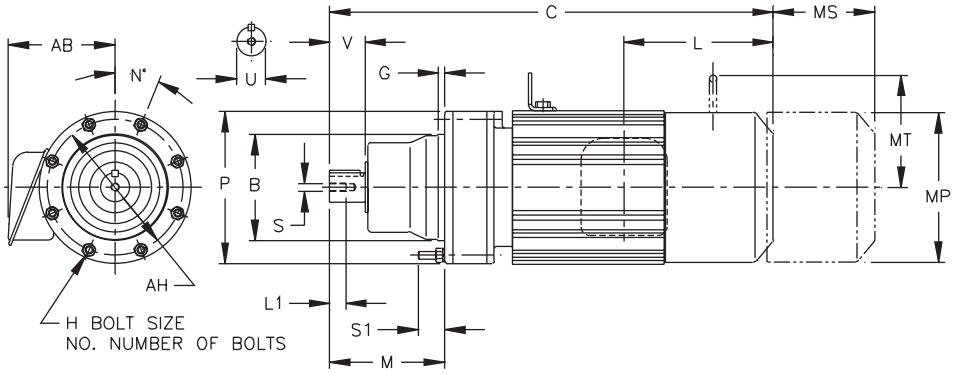

Metric (mm)[2]

Model CNFM	B g6	G	H	NO.	M	N	P	Q	S1	AH
606□	80	4	6.6	6	69	60	110	M6	21	98
607□	80	4	6.6	6	74	60	110	M6	21	98
608□	95	5	9	8	91	22.5	134	M8	27	118
609□	105	6	9	8	114	22.5	150	M8	29	134
610□	105	6	9	8	114	22.5	150	M8	28	134
611□	115	6	9	8	118	22.5	162	M8	26	146
612□	140	14	11	6	139	60	204	M10	33	180

Model CNFM	LOW SPEED SHAFT				
	U h6	V	S	L1	KEY
606□	14	25	M5	16	5 X 5 X 20
607□	18	30	M6	16	6 X 6 X 25
608□	22	35	M6	16	6 X 6 X 30
609□	28	35	M8	20	8 X 7 X 32
610□	28	35	M8	20	8 X 7 X 32
611□	32	45	M8	20	10 X 8 X 37
612□	38	55	M8	20	10 X 8 X 50

Notes: [1] 0 or 5 replaces □ depending on the model selected for the application. Please refer to the Gearmotor Selection Procedure and Tables in this section.
[2] The shaft dimensions shown above are hard metric sizes with metric keys. Units are available with shafting made to either DIN/ISO or JIS tolerances. Please consult factory for availability.

Dimensions shown are for reference only and are subject to change without notice, unless certified.
Certified prints are available after receipt of an order; consult factory.

CNFM-606□~612□[1] (con't.)

Metric (mm)

Model	Motor		Without Brake				Appx Wt (kg)	With Brake						Appx Wt (kg)
	kW	Pole	C	AB	L	MP		C	AB	L	MP	MS	MT	
CNFM01-606□	0.1	4	226	85	35	119	5.5	261	89	70	124	49	-	7.0
CNFM02-606□	0.2	4	268	85	59	124	6.5	300	89	91	124	61	-	8.0
CNFM03-606□	0.25	4	268	85	59	124	6.5	300	89	91	124	61	-	8.0
CNFM01-607□	0.1	4	232	85	35	119	6.5	267	89	70	124	49	-	7.5
CNFM02-607□	0.2	4	274	85	59	124	7.5	306	89	91	124	61	-	8.5
CNFM03-607□	0.25	4	274	85	59	124	7.5	306	89	91	124	61	-	8.5
CNFM05-607□	0.4	4	294	85	59	124	8.5	326	89	91	124	61	-	9.5
CNFM01-608□	0.1	4	258	85	35	119	9.0	293	89	70	124	49	-	10
CNFM02-608□	0.2	4	300	85	59	124	10	332	89	91	124	61	-	11
CNFM03-608□	0.25	4	300	85	59	124	10	332	89	91	124	61	-	11
CNFM05-608□	0.4	4	320	85	59	124	12	352	89	91	124	61	-	13
CNFM08-608□	0.55	4	361	114	97	148	16	404	142	140	148	93	106	17
CNFM1-608□	0.75	4	361	114	97	148	16	404	142	140	148	93	106	17
CNFM01-609□	0.1	4	276	85	35	119	10	311	89	70	124	49	-	12
CNFM02-609□	0.2	4	318	85	59	124	11	350	89	91	124	61	-	13
CNFM03-609□	0.25	4	318	85	59	124	11	350	89	91	124	61	-	13
CNFM05-609□	0.4	4	338	85	59	124	12	370	89	91	124	61	-	14
CNFM08-609□	0.55	4	379	114	97	148	16	422	142	140	148	93	106	18
CNFM1-609□	0.75	4	379	114	97	148	16	422	142	140	148	93	106	18
CNFM1H-609□	1.1	4	412	119	100	160	20	474	147	162	160	115	114	24
CNFM2-609□	1.5	4	412	119	100	160	20	474	147	162	160	115	114	24
CNFM02-610□	0.2	4	332	85	59	124	13	364	89	91	124	61	-	15
CNFM03-610□	0.25	4	332	85	59	124	13	364	89	91	124	61	-	15
CNFM05-610□	0.4	4	352	85	59	124	14	384	89	91	124	61	-	16
CNFM08-610□	0.55	4	393	114	97	148	18	436	142	140	148	93	106	21
CNFM1-610□	0.75	4	393	114	97	148	18	436	142	140	148	93	106	21
CNFM1H-610□	1.1	4	426	119	100	160	22	488	147	162	160	115	114	27
CNFM2-610□	1.5	4	426	119	100	160	22	488	147	162	160	115	114	27
CNFM3-610□	2.2	4	446	126	105	173	26	509	154	168	173	121	124	32
CNFM05-612□	0.4	4	363	85	59	124	16	394	89	91	124	61	-	17
CNFM08-612□	0.55	4	403	114	97	148	18	452	142	140	148	93	106	22
CNFM1-612□	0.75	4	403	114	97	148	19	452	142	140	148	93	106	22
CNFM1H-612□	1.1	4	436	119	100	160	22	493	147	162	160	115	114	27
CNFM2-612□	1.5	4	436	119	100	160	22	493	147	162	160	115	114	27
CNFM3-612□	2.2	4	456	126	105	173	26	519	154	168	173	121	124	32
CNFM5-612□	3.7	4	491	147	127	212	36	563	170	199	212	132	157	46
CNFM08-612□	0.55	4	423	114	97	148	27	466	142	140	148	93	106	30
CNFM1-612□	0.75	4	423	114	97	148	27	466	142	140	148	93	106	30
CNFM1H-612□	1.1	4	456	119	100	160	31	518	147	162	160	115	114	36
CNFM2-612□	1.5	4	456	119	100	160	31	518	147	162	160	115	114	36
CNFM3-612□	2.2	4	476	126	105	173	35	539	154	168	173	121	124	42
CNFM5-612□	3.7	4	499	147	127	212	45	571	170	199	212	132	157	55
CNFM8-612□	5.5	4	543	147	127	212	52	615	170	199	212	132	157	62

Note: [1] 0 or 5 replaces □ depending on the model selected for the application. Please refer to the Gearmotor Selection Procedure and Tables in this section.

INTEGRAL F-FLANGE MOUNT
SINGLE REDUCTION

CHFM-613□~616□[1]

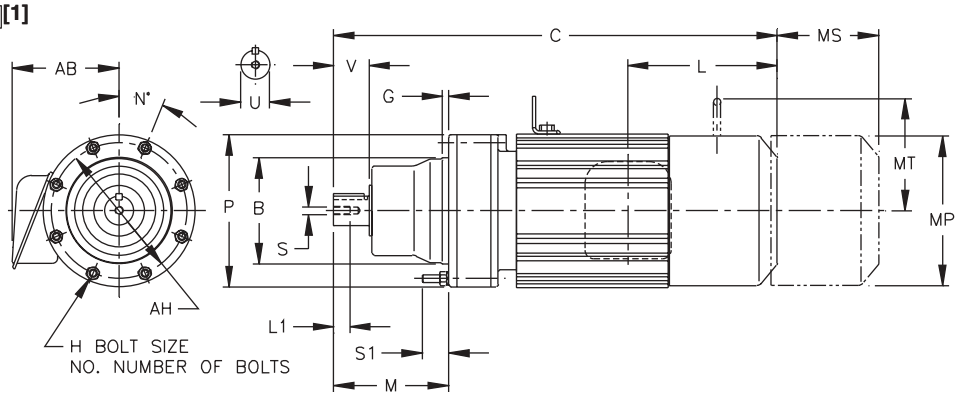

Inch (in)

Model CHFM	B	G	H	NO	M	N	O	P	Q	S1	AH	X
613□Y	6.4955 6.4945	0.63	0.43	6	7.01	60	5.91	9.06	M10	1.22	8.07	8.19
614□Y	6.4955 6.4945	0.63	0.43	6	7.80	60	5.91	9.06	M10	1.22	8.07	8.19
616□Y	7.8734 7.8723	0.39	0.55	6	8.74	30	7.44	11.81	M12	1.38	10.63	8.98

Model CHFM	LOW SPEED SHAFT				
	U*	V	L1	S	KEY
613□Y	1.875	2.76	0.71	3/8-16UNC	1/2 X 1/2 X 2.16
614□Y	1.875	3.54	0.71	3/8-16UNC	1/2 X 1/2 X 2.95
616□Y	2.250	3.54	0.71	3/8-16UNC	1/2 X 1/2 X 2.95

*** Shaft Tolerances:**

Shaft Nominal Diameter (inches)	Tolerances (inches)
1.25 (1 1/4) through 1.875 (1 7/8)	+0.0000/-0.0006
2.000 (2) through 3.125 (3 1/8)	+0.0000/-0.0007

Model	Motor		Without Brake				Appx Wt (lb)	With Brake						Appx Wt (lb)
	HP	Pole	C	AB	L	MP		C	AB	L	MP	MS	MT	
CHFM1-613□Y	1	4	18.78	4.49	3.82	5.83	95	20.47	5.59	5.51	5.83	3.66	4.17	106
CHFM1H-613□Y	1.5	4	20.08	4.69	3.94	6.30	104	22.52	5.79	6.38	6.30	4.53	4.49	115
CHFM2-613□Y	2	4	20.08	4.69	3.94	6.30	104	22.52	5.79	6.38	6.30	4.53	4.49	115
CHFM3-613□Y	3	4	20.87	4.96	4.13	6.81	110	23.35	6.06	6.61	6.81	4.76	4.88	126
CHFM5-613□Y	5	4	21.77	5.79	5.00	8.35	132	24.61	6.69	7.83	8.35	5.20	6.18	154
CHFM8-613□Y	7.5	4	23.50	5.79	5.00	8.35	148	26.34	6.69	7.83	8.35	5.20	6.18	170
CHFM10-613□Y	10	4	24.41	7.40	5.63	9.88	181	28.15	7.40	9.37	9.88	6.69	7.17	221
CHFM15-613□Y	15	4	26.77	7.40	5.63	9.88	212	30.51	7.40	9.37	9.88	6.69	7.17	251
CHFM1H-614□Y	1.5	4	20.87	4.69	3.94	6.30	106	23.31	5.79	6.38	6.30	4.53	4.49	117
CHFM2-614□Y	2	4	20.87	4.69	3.94	6.30	106	23.31	5.79	6.38	6.30	4.53	4.49	117
CHFM3-614□Y	3	4	21.65	4.96	4.13	6.81	112	24.13	6.06	6.61	6.81	4.76	4.88	128
CHFM5-614□Y	5	4	22.56	5.79	5.00	8.35	135	25.39	6.69	7.83	8.35	5.20	6.18	157
CHFM8-614□Y	7.5	4	24.29	5.79	5.00	8.35	150	27.13	6.69	7.83	8.35	5.20	6.18	172
CHFM10-614□Y	10	4	25.20	7.40	5.63	9.88	183	28.94	7.40	9.37	9.88	6.69	7.17	223
CHFM15-614□Y	15	4	27.56	7.40	5.63	9.88	214	31.30	7.40	9.37	9.88	6.69	7.17	254
CHFM20-614□Y	20	4	31.10	9.13	11.61	12.76	329	34.65	9.13	15.16	12.76	8.66	-	401
CHFM2-616□Y	2	4	22.95	4.69	3.94	6.30	165	25.39	5.79	6.38	6.30	4.53	4.49	176
CHFM3-616□Y	3	4	23.54	4.96	4.13	6.81	172	26.02	6.06	6.61	6.81	4.76	4.88	185
CHFM5-616□Y	5	4	24.45	5.79	5.00	8.35	192	27.28	6.69	7.83	8.35	5.20	6.18	214
CHFM8-616□Y	7.5	4	26.18	5.79	5.00	8.35	207	29.02	6.69	7.83	8.35	5.20	6.18	229
CHFM10-616□Y	10	4	27.28	7.40	5.63	9.88	243	31.02	7.40	9.37	9.88	6.69	7.17	280
CHFM15-616□Y	15	4	29.65	7.40	5.63	9.88	273	33.39	7.40	9.37	9.88	6.69	7.17	311
CHFM20-616□Y	20	4	32.99	9.13	11.61	12.76	390	36.54	9.13	15.16	12.76	8.66	-	463
CHFM25-616□Y	25	4	36.73	11.69	13.39	15.51	549	45.00	11.69	21.65	15.51	14.45	-	662
CHFM30-616□Y	30	4	36.73	11.69	13.39	15.51	549	45.00	11.69	21.65	15.51	14.45	-	662

Note: [1] 0 or 5 replaces □ depending on the model selected for the application. Please refer to the Gearmotor Selection Procedure and Tables in this section.

Dimensions shown are for reference only and are subject to change without notice, unless certified.
Certified prints are available after receipt of an order; consult factory.

CHFM-613□~616□[1] (con't.)

Metric (mm)[2]

Model CHFM	B g6	G	H	NO	M	N	O	P	Q	S1	AH	X
613□	165	16	11	6	178	60	150	230	M10	31	205	208
614□	165	16	11	6	198	60	150	230	M10	31	205	208
616□	200	10	14	6	222	30	189	300	M12	35	270	228

Model CHFM	LOW SPEED SHAFT				
	U h6	V	S	L1	KEY
613□	50	70	M10	18	14 X 9 X 56
614□	50	90	M10	18	14 X 9 X 80
616□	60	90	M10	18	18 X 11 X 80

Model	Motor		Without Brake				Appx Wt (kg)	With Brake						Appx Wt (kg)
	kW	Pole	C	AB	L	MP		C	AB	L	MP	MS	MT	
CHFM1-613□	0.75	4	477	114	97	148	43	520	142	140	148	93	106	48
CHFM1H-613□	1.1	4	510	119	100	160	47	572	147	162	160	115	114	52
CHFM2-613□	1.5	4	510	119	100	160	47	572	147	162	160	115	114	52
CHFM3-613□	2.2	4	530	126	105	173	50	593	154	168	173	121	124	57
CHFM5-613□	3.7	4	553	147	127	212	60	625	170	199	212	132	157	70
CHFM8-613□	5.5	4	597	147	127	212	67	669	170	199	212	132	157	77
CHFM10-613□	7.5	4	620	188	143	251	82	715	188	238	251	170	182	100
CHFM15-613□	11	4	680	188	143	251	96	775	188	238	251	170	182	114
CHFM1H-614□	1.1	4	530	119	100	160	48	592	147	162	160	115	114	53
CHFM2-614□	1.5	4	530	119	100	160	48	592	147	162	160	115	114	53
CHFM3-614□	2.2	4	550	126	105	173	51	613	154	168	173	121	124	58
CHFM5-614□	3.7	4	573	147	127	212	61	645	170	199	212	132	157	71
CHFM8-614□	5.5	4	617	147	127	212	68	689	170	199	212	132	157	78
CHFM10-614□	7.5	4	640	188	143	251	83	735	188	238	251	170	182	101
CHFM15-614□	11	4	700	188	143	251	97	795	188	238	251	170	182	115
CHFM20-614□	15	4	790	232	295	324	149	880	232	385	324	220	-	182
CHFM2-616□	1.5	4	583	119	100	160	75	645	147	162	160	115	114	80
CHFM3-616□	2.2	4	598	126	105	173	78	661	154	168	173	121	124	84
CHFM5-616□	3.7	4	621	147	127	212	87	693	170	199	212	132	157	97
CHFM8-616□	5.5	4	665	147	127	212	94	737	170	199	212	132	157	104
CHFM10-616□	7.5	4	693	188	143	251	110	788	188	238	251	170	182	127
CHFM15-616□	11	4	753	188	143	251	124	848	188	238	251	170	182	141
CHFM20-616□	15	4	838	232	295	324	177	928	232	385	324	220	-	210
CHFM25-616□	18.5	4	933	297	340	394	249	1143	297	550	394	367	-	300
CHFM30-616□	22	4	933	297	340	394	249	1143	297	550	394	367	-	300

Notes: [1] 0 or 5 replaces □ depending on the model selected for the application. Please refer to the Gearmotor Selection Procedure and Tables in this section.
[2] The shaft dimensions shown above are hard metric sizes with metric keys. Units are available with shafting made to either DIN/ISO or JIS tolerances. Please consult factory for availability.

INTEGRAL F-FLANGE MOUNT
SINGLE REDUCTION

CHFM-617□~619□[1]

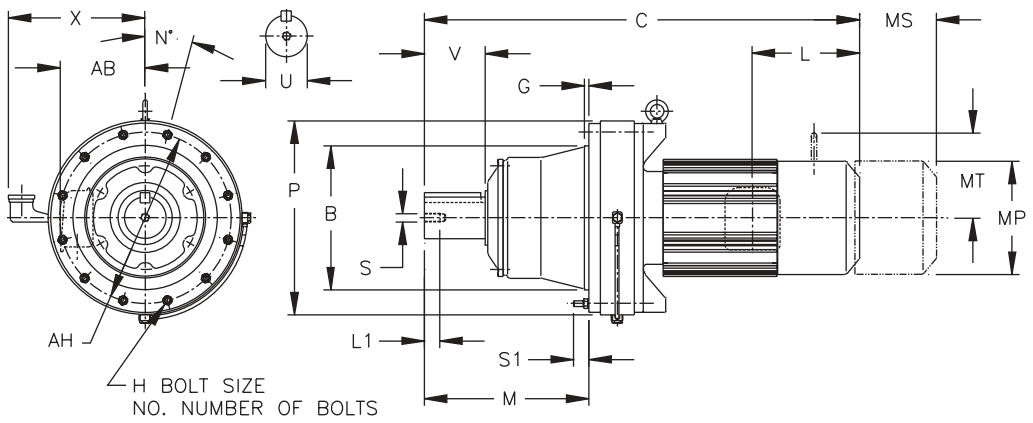

Inch (in)

Model CHFM	B	G	H	NO	M	N	O	P	Q	S1	AH	X
617□Y	9.8419 9.8408	0.47	0.55	8	10.31	22.5	8.50	13.39	M12	1.61	11.81	9.57
618□Y	11.0230 11.0217	0.47	0.55	8	11.77	22.5	9.09	14.57	M12	1.50	12.99	10.16
619□Y	12.5977 12.5963	0.39	0.55	12	14.37	15	11.06	16.93	M12	1.61	14.96	11.22

Model CHFM	LOW SPEED SHAFT				
	U*	V	S	L1	KEY
617□Y	2.750	3.54	1/2-13UNC	0.94	5/8 X 5/8 X 3.15
618□Y	3.125	4.33	1/2-13UNC	0.94	3/4 X 3/4 X 3.74
619□Y	3.625	5.31	3/4-10UNC	1.34	7/8 X 7/8 X 4.92

Note: [1] 0 or 5 replaces □ depending on the model selected for the application. Please refer to the Gearmotor Selection Procedure and Tables in this section.

*** Shaft Tolerances:**

Shaft Nominal Diameter (inches)	Tolerances (inches)
2.000 (2) through 3.125 (3 1/8)	+0.0000/-0.0007
3.250 (3 1/4) through 4.625 (4 5/8)	+0.0000/-0.0009

Dimensions shown are for reference only and are subject to change without notice, unless certified. Certified prints are available after receipt of an order; consult factory.

CHFM-617□~619□[1] (con't.)

Inch (in)

Model	Motor		Without Brake				Appx Wt (lb)	With Brake						Appx Wt (lb)
	HP	Pole	C	AB	L	MP		C	AB	L	MP	MS	MT	
CHFM5-617□Y	5	4	26.77	5.79	5.00	8.35	260	29.61	6.69	7.83	8.35	5.20	6.18	282
CHFM8-617□Y	7.5	4	28.50	5.79	5.00	8.35	276	31.34	6.69	7.83	8.35	5.20	6.18	298
CHFM10-617□Y	10	4	29.21	7.40	5.63	9.88	309	32.95	7.40	9.37	9.88	6.69	7.17	348
CHFM15-617□Y	15	4	31.57	7.40	5.63	9.88	340	35.31	7.40	9.37	9.88	6.69	7.17	379
CHFM20-617□Y	20	4	34.72	9.13	11.61	12.76	459	38.27	9.13	15.16	12.76	8.66	-	531
CHFM25-617□Y	25	4	38.46	11.69	13.39	15.51	609	46.73	11.69	21.65	15.51	14.45	-	721
CHFM30-617□Y	30	4	38.46	11.69	13.39	15.51	609	46.73	11.69	21.65	15.51	14.45	-	721
CHFM40-617□Y	40	4	38.46	11.69	13.39	15.51	646	46.73	11.69	21.65	15.51	14.45	-	741
CHFM5-618□Y	5	4	28.23	5.79	5.00	8.35	326	31.06	6.69	7.83	8.35	5.20	6.18	348
CHFM8-618□Y	7.5	4	29.96	5.79	5.00	8.35	344	32.80	6.69	7.83	8.35	5.20	6.18	366
CHFM10-618□Y	10	4	30.67	7.40	5.63	9.88	377	34.41	7.40	9.37	9.88	6.69	7.17	417
CHFM15-618□Y	15	4	33.03	7.40	5.63	9.88	408	36.77	7.40	9.37	9.88	6.69	7.17	448
CHFM20-618□Y	20	4	36.18	9.13	11.61	12.76	540	39.72	9.13	15.16	12.76	8.66	-	602
CHFM25-618□Y	25	4	39.92	11.69	13.39	15.51	677	48.19	11.69	21.65	15.51	14.45	-	789
CHFM30-618□Y	30	4	39.92	11.69	13.39	15.51	677	48.19	11.69	21.65	15.51	14.45	-	789
CHFM40-618□Y	40	4	39.92	11.69	13.39	15.51	714	48.19	11.69	21.65	15.51	14.45	-	809
CHFM50-618□Y	50	4	44.45	11.69	16.93	15.51	820	52.91	11.69	25.39	15.51	17.52	-	1034
CHFM60-618□Y	60	4	44.45	11.69	16.93	15.51	820	52.91	11.69	25.39	15.51	17.52	-	1034
CHFM8-619□Y	7.5	4	33.74	5.79	5.00	8.35	476	36.57	6.69	7.83	8.35	5.20	6.18	498
CHFM10-619□Y	10	4	34.25	7.40	5.63	9.88	505	37.99	7.40	9.37	9.88	6.69	7.17	545
CHFM15-619□Y	15	4	36.61	7.40	5.63	9.88	536	40.35	7.40	9.37	9.88	6.69	7.17	576
CHFM20-619□Y	20	4	39.17	9.13	11.61	12.76	653	42.72	9.13	15.16	12.76	8.66	-	728
CHFM25-619□Y	25	4	42.91	11.69	13.39	15.51	811	51.18	11.69	21.65	15.51	14.45	-	911
CHFM256-619□Y	25	6	42.91	11.69	13.39	15.51	845	51.18	11.69	21.65	15.51	14.45	-	939
CHFM30-619□Y	30	4	42.91	11.69	13.39	15.51	811	51.18	11.69	21.65	15.51	14.45	-	911
CHFM40-619□Y	40	4	42.91	11.69	13.39	15.51	845	51.18	11.69	21.65	15.51	14.45	-	939
CHFM406-619□Y	40	6	47.44	11.69	16.93	15.51	928	55.91	11.69	25.39	15.51	5.20	-	1142
CHFM50-619□Y	50	4	47.44	11.69	16.93	15.51	928	55.91	11.69	25.39	15.51	17.52	-	1142
CHFM506-619□Y	50	6	47.44	11.69	16.93	15.51	928	55.91	11.69	25.39	15.51	17.52	-	1142
CHFM60-619□Y	60	4	47.44	11.69	16.93	15.51	928	55.91	11.69	25.39	15.51	17.52	-	1142

Note: [1] 0 or 5 replaces □ depending on the model selected for the application. Please refer to the Gearmotor Selection Procedure and Tables in this section.

INTEGRAL F-FLANGE MOUNT
SINGLE REDUCTION

CHFM-617□~619□[1]

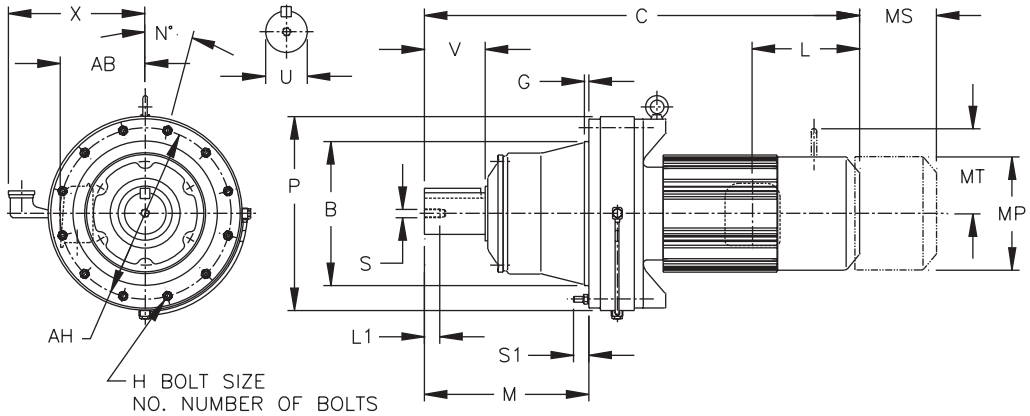

Metric (mm)[2]

Model CHFM	B g6	G	H	NO	M	N	O	P	Q	S1	AH	X
617□	250	12	14	8	262	22.5	216	340	M12	41	300	243
618□	280	12	14	8	299	22.5	231	370	M12	38	330	258
619□	320	10	14	12	365	15	281	430	M12	41	380	285

Model CHFM	LOW SPEED SHAFT				
	U h6	V	S	L1	KEY
617□	70	90	M12	24	20 X 12 X 80
618□	80	110	M12	24	22 X 14 X 100
619□	95	135	M20	3	25 X 14 X 125

Notes: [1] 0 or 5 replaces □ depending on the model selected for the application. Please refer to the Gearmotor Selection Procedure and Tables in this section.
[2] The shaft dimensions shown above are hard metric sizes with metric keys. Units are available with shafting made to either DIN/ISO or JIS tolerances. Please consult factory for availability.

Dimensions shown are for reference only and are subject to change without notice, unless certified.
Certified prints are available after receipt of an order; consult factory.

CHFM-617□~619□[1] (con't.)

Metric (mm)

Model	Motor		Without Brake				Appx Wt (kg)	With Brake						Appx Wt (kg)
	kW	Pole	C	AB	L	MP		C	AB	L	MP	MS	MT	
CHFM5-617□	3.7	4	680	147	127	212	118	752	170	199	212	132	157	128
CHFM8-617□	5.5	4	724	147	127	212	125	796	170	199	212	132	157	135
CHFM10-617□	7.5	4	742	188	143	251	140	837	188	238	251	170	182	158
CHFM15-617□	11	4	802	188	143	251	154	897	188	238	251	170	182	172
CHFM20-617□	15	4	882	232	295	324	208	972	232	385	324	220	-	241
CHFM25-617□	18.5	4	977	297	340	394	276	1187	297	550	394	367	-	327
CHFM30-617□	22	4	977	297	340	394	276	1187	297	550	394	367	-	327
CHFM40-617□	30	4	977	297	340	394	293	1187	297	550	394	367	-	336
CHFM5-618□	3.7	4	717	147	127	212	148	789	170	199	212	132	157	158
CHFM8-618□	5.5	4	761	147	127	212	156	833	170	199	212	132	157	166
CHFM10-618□	7.5	4	779	188	143	251	171	874	188	238	251	170	182	189
CHFM15-618□	11	4	839	188	143	251	185	934	188	238	251	170	182	203
CHFM20-618□	15	4	919	232	295	324	245	1009	232	385	324	220	-	273
CHFM25-618□	18.5	4	1014	297	340	394	307	1224	297	550	394	367	-	358
CHFM30-618□	22	4	1014	297	340	394	307	1224	297	550	394	367	-	358
CHFM40-618□	30	4	1014	297	340	394	324	1224	297	550	394	367	-	367
CHFM50-618□	37	4	1129	297	430	394	372	1344	297	645	394	445	-	469
CHFM60-618□	45	4	1129	297	430	394	372	1344	297	645	394	445	-	469
CHFM8-619□	5.5	4	857	147	127	212	216	929	170	199	212	132	157	226
CHFM10-619□	7.5	4	870	188	143	251	229	965	188	238	251	170	182	247
CHFM15-619□	11	4	930	188	143	251	243	1025	188	238	251	170	182	261
CHFM20-619□	15	4	995	232	295	324	296	1085	232	385	324	220	-	330
CHFM25-619□	18.5	4	1090	297	340	394	368	1300	297	550	394	367	-	413
CHFM256-619□	18.5	6	1090	297	340	394	383	1300	297	550	394	367	-	426
CHFM30-619□	22	4	1090	297	340	394	368	1300	297	550	394	367	-	413
CHFM40-619□	30	4	1090	297	340	394	383	1300	297	550	394	367	-	426
CHFM406-619□	30	6	1205	297	430	394	421	1420	297	645	394	132	-	518
CHFM50-619□	37	4	1205	297	430	394	421	1420	297	645	394	445	-	518
CHFM506-619□	37	6	1205	297	430	394	421	1420	297	645	394	445	-	518
CHFM60-619□	45	4	1205	297	430	394	421	1420	297	645	394	445	-	518

Notes: [1] 0 or 5 replaces □ depending on the model selected for the application. Please refer to the Gearmotor Selection Procedure and Tables in this section.

INTEGRAL F-FLANGE MOUNT
SINGLE REDUCTION

CHFM-6205~6245

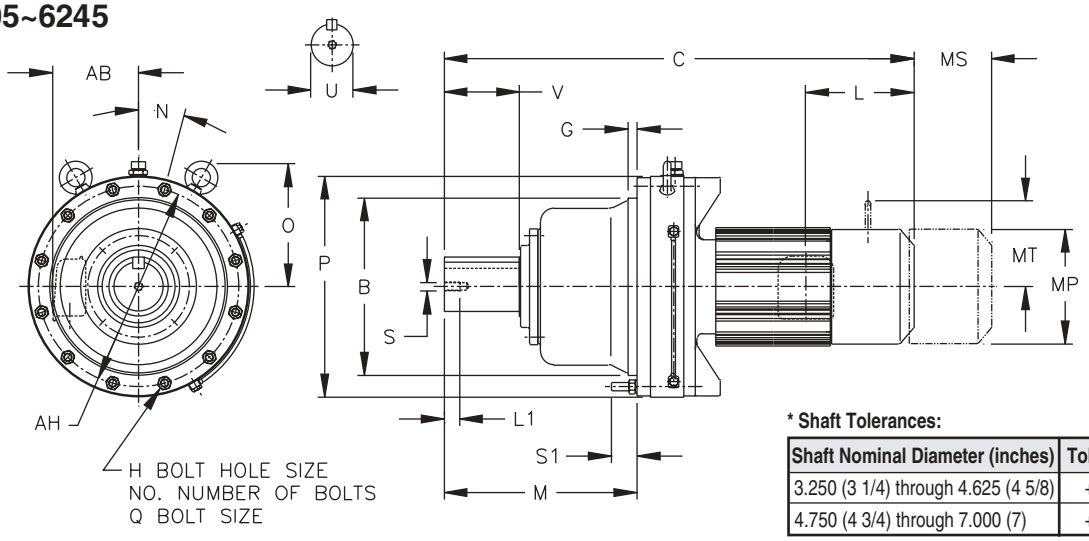

*** Shaft Tolerances:**

Shaft Nominal Diameter (inches)	Tolerances (inches)
3.250 (3 1/4) through 4.625 (4 5/8)	+0.0000/-0.0009
4.750 (4 3/4) through 7.000 (7)	+0.0000/-0.0010

Inch (in)

Model CHFM	B	G	H	NO	M	N	O	P	Q	S1	AH
6205Y	14.1725 14.1711	0.79	0.71	12	16.14	15	11.14	17.64	M16	2.20	15.94
6215Y	15.3536 15.3522	0.79	0.81	12	16.65	15	12.28	19.09	M18	2.20	17.32
6225Y	16.5346 16.5331	0.79	0.87	12	17.87	15	13.11	20.71	M20	2.52	18.70
6235Y	17.9126 17.9110	0.79	0.87	12	19.88	15	13.82	22.13	M20	2.56	20.08
6245Y	19.6843 19.6827	0.98	1.06	12	20.83	15	15.55	24.17	M24	2.56	22.05

Model CHFM	LOW SPEED SHAFT				
	U*	V	S	L1	KEY
6205Y	3.875	6.50	3/4-10UNC	1.34	1 X 1 X 6.50
6215Y	4.250	6.50	3/4-10UNC	1.34	1 X 1 X 6.50
6225Y	4.625	6.50	3/4-10UNC	1.34	1-1/4 X 7/8 X 6.50
6235Y	5.000	7.87	1-8UNC	1.61	1-1/4 X 7/8 X 7.87
6245Y	5.500	7.87	1-8UNC	1.61	1-1/4 X 7/8 X 7.87

Model	Motor		Without Brake				Appx Wt (lb)	With Brake						Appx Wt (lb)
	HP	Pole	C	AB	L	MP		C	AB	L	MP	MS	MT	
CHFM15-6205Y	15	4	38.27	7.40	5.63	9.88	593	42.01	7.40	9.37	9.88	6.69	7.17	633
CHFM20-6205Y	20	4	41.02	9.13	11.61	12.76	712	44.57	9.13	15.16	12.76	8.66	-	789
CHFM206-6205Y	20	6	44.37	11.69	13.39	15.51	869	52.64	11.69	21.65	15.51	14.45	-	968
CHFM25-6205Y	25	4	44.37	11.69	13.39	15.51	869	52.64	11.69	21.65	15.51	14.45	-	968
CHFM30-6205Y	30	4	44.37	11.69	13.39	15.51	869	52.64	11.69	21.65	15.51	14.45	-	968
CHFM306-6205Y	30	6	44.37	11.69	13.39	15.51	897	52.64	11.69	21.65	15.51	14.57	-	997
CHFM40-6205Y	40	4	44.37	11.69	13.39	15.51	897	52.64	11.69	21.65	15.51	14.57	-	997
CHFM406-6205Y	40	6	48.90	11.69	16.93	15.51	981	57.36	11.69	25.39	15.51	17.52	-	1188
CHFM50-6205Y	50	4	48.90	11.69	16.93	15.51	981	57.36	11.69	25.39	15.51	17.52	-	1188
CHFM506-6205Y	50	6	48.90	11.69	16.93	15.51	981	57.36	11.69	25.39	15.51	17.52	-	1188
CHFM60-6205Y	60	4	48.90	11.69	16.93	15.51	981	57.36	11.69	25.39	15.51	17.52	-	1188
CHFM606-6205Y	60	6	51.06	16.22	18.31	19.06	1186	-	-	-	-	-	-	-
CHFM75-6205Y	75	4	51.06	16.22	18.31	19.06	1186	-	-	-	-	-	-	-

Dimensions shown are for reference only and are subject to change without notice, unless certified.
Certified prints are available after receipt of an order; consult factory.

CHFM-6205~6245 (con't.)

Inch (in)

Model	Motor		Without Brake				Appx Wt (lb)	With Brake						Appx Wt (lb)
	HP	Pole	C	AB	L	MP		C	AB	L	MP	MS	MT	
CHFM15-6215Y	15	4	39.21	7.40	5.63	9.88	770	42.95	7.40	9.37	9.88	6.69	7.17	809
CHFM20-6215Y	20	4	41.97	9.13	11.61	12.76	891	45.51	9.13	15.16	12.76	8.66	-	966
CHFM206-6215Y	20	6	45.31	11.69	13.39	15.51	1034	53.58	11.69	21.65	15.51	14.45	-	1133
CHFM25-6215Y	25	4	45.31	11.69	13.39	15.51	1034	53.58	11.69	21.65	15.51	14.45	-	1133
CHFM256-6215Y	25	6	45.31	11.69	13.39	15.51	1063	53.58	11.69	21.65	15.51	14.45	-	1162
CHFM30-6215Y	30	4	45.31	11.69	13.39	15.51	1034	53.58	11.69	21.65	15.51	14.45	-	1133
CHFM306-6215Y	30	6	45.31	11.69	13.39	15.51	1063	53.58	11.69	21.65	15.51	14.57	-	1162
CHFM40-6215Y	40	4	45.31	11.69	13.39	15.51	1063	53.58	11.69	21.65	15.51	14.57	-	1162
CHFM406-6215Y	40	6	49.84	11.69	16.93	15.51	1147	58.31	11.69	25.39	15.51	17.52	-	1356
CHFM50-6215Y	50	4	49.84	11.69	16.93	15.51	1147	58.31	11.69	25.39	15.51	17.52	-	1356
CHFM506-6215Y	50	6	49.84	11.69	16.93	15.51	1147	58.31	11.69	25.39	15.51	17.52	-	1356
CHFM60-6215Y	60	4	49.84	11.69	16.93	15.51	1147	58.31	11.69	25.39	15.51	17.52	-	1356
CHFM606-6215Y	60	6	52.01	16.22	18.31	19.06	1389	-	-	-	-	-	-	-
CHFM75-6215Y	75	4	52.01	16.22	18.31	19.06	1389	-	-	-	-	-	-	-
CHFM206-6225Y	20	6	46.89	11.69	13.39	15.51	1184	55.16	11.69	21.65	15.51	14.45	-	1283
CHFM25-6225Y	25	4	46.89	11.69	13.39	15.51	1184	55.16	11.69	21.65	15.51	14.45	-	1283
CHFM256-6225Y	25	6	46.89	11.69	13.39	15.51	1213	55.16	11.69	21.65	15.51	14.45	-	1312
CHFM30-6225Y	30	4	46.89	11.69	13.39	15.51	1184	55.16	11.69	21.65	15.51	14.45	-	1283
CHFM306-6225Y	30	6	46.89	11.69	13.39	15.51	1213	55.16	11.69	21.65	15.51	14.57	-	1312
CHFM40-6225Y	40	4	46.89	11.69	13.39	15.51	1213	55.16	11.69	21.65	15.51	14.57	-	1312
CHFM406-6225Y	40	6	51.42	11.69	16.93	15.51	1297	59.88	11.69	25.39	15.51	17.52	-	1506
CHFM50-6225Y	50	4	51.42	11.69	16.93	15.51	1297	59.88	11.69	25.39	15.51	17.52	-	1506
CHFM506-6225Y	50	6	51.42	11.69	16.93	15.51	1297	59.88	11.69	25.39	15.51	17.52	-	1506
CHFM60-6225Y	60	4	51.42	11.69	16.93	15.51	1297	59.88	11.69	25.39	15.51	17.52	-	1506
CHFM606-6225Y	60	6	53.58	16.22	18.31	19.06	1515	-	-	-	-	-	-	-
CHFM75-6225Y	75	4	53.58	16.22	18.31	19.06	1515	-	-	-	-	-	-	-
CHFM206-6235Y	20	6	49.33	11.69	13.39	15.51	1372	57.60	11.69	21.65	15.51	14.45	-	1440
CHFM256-6235Y	25	6	49.33	11.69	13.39	15.51	1372	57.60	11.69	21.65	15.51	14.45	-	1471
CHFM306-6235Y	30	6	49.33	11.69	13.39	15.51	1372	57.60	11.69	21.65	15.51	14.57	-	1471
CHFM406-6235Y	40	6	53.86	11.69	16.93	15.51	1473	62.32	11.69	25.39	15.51	17.52	-	1667
CHFM506-6235Y	50	6	53.86	11.69	16.93	15.51	1473	62.32	11.69	25.39	15.51	17.52	-	1667
CHFM606-6235Y	60	6	56.02	16.22	18.31	19.06	1669	-	-	-	-	-	-	-
CHFM756-6235Y	75	6	59.17	16.22	19.88	19.09	1788	-	-	-	-	-	-	-
CHFM206-6245Y	20	6	50.47	11.69	13.39	15.51	1636	58.74	11.69	21.65	15.51	14.45	-	1709
CHFM256-6245Y	25	6	50.47	11.69	13.39	15.51	1636	58.74	11.69	21.65	15.51	14.45	-	1740
CHFM306-6245Y	30	6	50.47	11.69	13.39	15.51	1636	58.74	11.69	21.65	15.51	14.57	-	1740
CHFM406-6245Y	40	6	55.00	11.69	16.93	15.51	1738	63.46	11.69	25.39	15.51	17.52	-	1932
CHFM506-6245Y	50	6	55.00	11.69	16.93	15.51	1738	63.46	11.69	25.39	15.51	17.52	-	1932
CHFM606-6245Y	60	6	57.17	16.22	18.31	19.06	1938	-	-	-	-	-	-	-
CHFM756-6245Y	75	6	60.31	16.22	19.88	19.09	2046	-	-	-	-	-	-	-

Dimensions shown are for reference only and are subject to change without notice, unless certified.
Certified prints are available after receipt of an order; consult factory.

INTEGRAL F-FLANGE MOUNT
SINGLE REDUCTION

CHFM-6205~6245

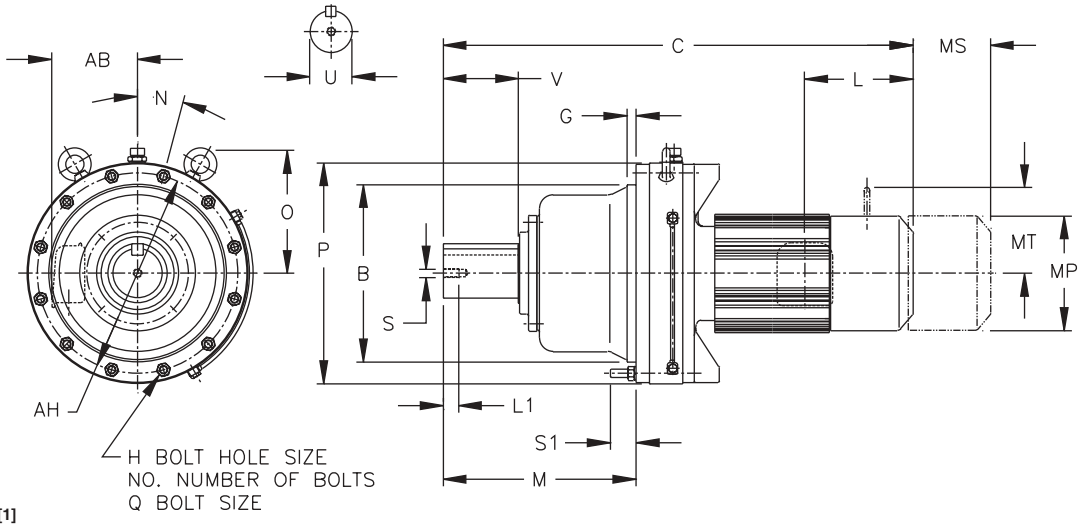

Metric (mm)[1]

Model CHFM	B g6	G	H	NO	M	N	O	P	Q	S1	AH
6205	360	20	18	12	410	15	283	448	M16	56	405
6215	390	20	20.5	12	423	15	312	485	M18	56	440
6225	420	20	22	12	454	15	333	526	M20	64	475
6235	455	20	22	12	505	15	351	562	M20	65	510
6245	500	25	27	12	529	15	395	614	M24	65	560

Model CHFM	LOW SPEED SHAFT				
	U h6	V	S	L1	KEY
6205	100	165	M20	34	28 X 16 X 165
6215	110	165	M20	34	28 X 16 X 165
6225	120	165	M20	34	32 X 18 X 165
6235	130	200	M24	41	32 X 18 X 200
6245	140	200	M24	41	36 X 20 X 200

Model	Motor		Without Brake				Appx Wt (kg)	With Brake						Appx Wt (kg)
	kW	Pole	C	AB	L	MP		C	AB	L	MP	MS	MT	
CHFM15-6205	11	4	972	188	143	251	269	1067	188	238	251	170	182	287
CHFM20-6205	15	4	1042	232	295	324	323	1132	232	385	324	220	-	358
CHFM206-6205	15	6	1127	297	340	394	394	1337	297	550	394	367	-	439
CHFM25-6205	18.5	4	1127	297	340	394	394	1337	297	550	394	367	-	439
CHFM30-6205	22	4	1127	297	340	394	394	1337	297	550	394	367	-	439
CHFM306-6205	22	6	1127	297	340	394	407	1337	297	550	394	370	-	452
CHFM40-6205	30	4	1127	297	340	394	407	1337	297	550	394	370	-	452
CHFM406-6205	30	6	1242	297	430	394	445	1457	297	645	394	445	-	539
CHFM50-6205	37	4	1242	297	430	394	445	1457	297	645	394	445	-	539
CHFM506-6205	37	6	1242	297	430	394	445	1457	297	645	394	445	-	539
CHFM60-6205	45	4	1242	297	430	394	445	1457	297	645	394	445	-	539
CHFM606-6205	45	6	1297	412	465	484	538	-	-	-	-	-	-	-
CHFM75-6205	55	4	1297	412	465	484	538	-	-	-	-	-	-	-

Note: [1] The shaft dimensions shown above are hard metric sizes with metric keys. Units are available with shafting made to either DIN/ISO or JIS tolerances. Please consult factory for availability.

Dimensions shown are for reference only and are subject to change without notice, unless certified.
Certified prints are available after receipt of an order; consult factory.

CHFM-6205~6245 (con't.)

Metric (mm)

Model	Motor		Without Brake				Appx Wt (kg)	With Brake						Appx Wt (kg)
	kW	Pole	C	AB	L	MP		C	AB	L	MP	MS	MT	
CHFM15-6215	11	4	996	188	143	251	349	1091	188	238	251	170	182	367
CHFM20-6215	15	4	1066	232	295	324	404	1156	232	385	324	220	-	438
CHFM206-6215	15	6	1151	297	340	394	469	1361	297	550	394	367	-	514
CHFM25-6215	18.5	4	1151	297	340	394	469	1361	297	550	394	367	-	514
CHFM256-6215	18.5	6	1151	297	340	394	482	1361	297	550	394	367	-	527
CHFM30-6215	22	4	1151	297	340	394	469	1361	297	550	394	367	-	514
CHFM306-6215	22	6	1151	297	340	394	482	1361	297	550	394	370	-	527
CHFM40-6215	30	4	1151	297	340	394	482	1361	297	550	394	370	-	527
CHFM406-6215	30	6	1266	297	430	394	520	1481	297	645	394	445	-	615
CHFM50-6215	37	4	1266	297	430	394	520	1481	297	645	394	445	-	615
CHFM506-6215	37	6	1266	297	430	394	520	1481	297	645	394	445	-	615
CHFM60-6215	45	4	1266	297	430	394	520	1481	297	645	394	445	-	615
CHFM606-6215	45	6	1321	412	465	484	630	-	-	-	-	-	-	-
CHFM75-6215	55	4	1321	412	465	484	630	-	-	-	-	-	-	-
CHFM206-6225	15	6	1191	297	340	394	537	1401	297	550	394	367	-	582
CHFM25-6225	18.5	4	1191	297	340	394	537	1401	297	550	394	367	-	582
CHFM256-6225	18.5	6	1191	297	340	394	550	1401	297	550	394	367	-	595
CHFM30-6225	22	4	1191	297	340	394	537	1401	297	550	394	367	-	582
CHFM306-6225	22	6	1191	297	340	394	550	1401	297	550	394	370	-	595
CHFM40-6225	30	4	1191	297	340	394	550	1401	297	550	394	370	-	595
CHFM406-6225	30	6	1306	297	430	394	588	1521	297	645	394	445	-	683
CHFM50-6225	37	4	1306	297	430	394	588	1521	297	645	394	445	-	683
CHFM506-6225	37	6	1306	297	430	394	588	1521	297	645	394	445	-	683
CHFM60-6225	45	4	1306	297	430	394	588	1521	297	645	394	445	-	683
CHFM606-6225	45	6	1361	412	465	484	687	-	-	-	-	-	-	-
CHFM75-6225	55	4	1361	412	465	484	687	-	-	-	-	-	-	-
CHFM206-6235	15	6	1253	297	340	394	622	1463	297	550	394	367	-	653
CHFM256-6235	18.5	6	1253	297	340	394	622	1463	297	550	394	367	-	667
CHFM306-6235	22	6	1253	297	340	394	622	1463	297	550	394	370	-	667
CHFM406-6235	30	6	1368	297	430	394	668	1583	297	645	394	445	-	756
CHFM506-6235	37	6	1368	297	430	394	668	1583	297	645	394	445	-	756
CHFM606-6235	45	6	1423	412	465	484	757	-	-	-	-	-	-	-
CHFM756-6235	55	6	1503	412	505	485	811	-	-	-	-	-	-	-
CHFM206-6245	15	6	1282	297	340	394	742	1492	297	550	394	367	-	775
CHFM256-6245	18.5	6	1282	297	340	394	742	1492	297	550	394	367	-	789
CHFM306-6245	22	6	1282	297	340	394	742	1492	297	550	394	370	-	789
CHFM406-6245	30	6	1397	297	430	394	788	1612	297	645	394	445	-	876
CHFM506-6245	37	6	1397	297	430	394	788	1612	297	645	394	445	-	876
CHFM606-6245	45	6	1452	412	465	484	879	-	-	-	-	-	-	
CHFM756-6245	55	6	1532	412	505	485	928	-	-	-	-	-	-	-

Dimensions shown are for reference only and are subject to change without notice, unless certified.
Certified prints are available after receipt of an order; consult factory.

INTEGRAL F-FLANGE MOUNT
SINGLE REDUCTION

CHFM-6255~6265

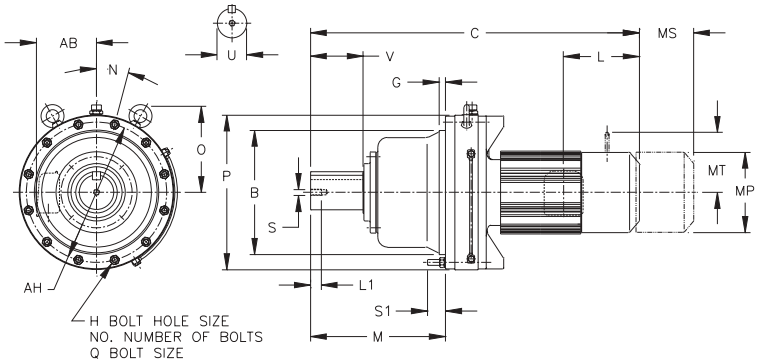

Inch (in)

Model CHFM	B	G	H	NO	M	N	O	P	Q	S1	AH
6255Y	21.2590 21.2562	1.18	1.06	12	24.25	15	15.20	26.38	M24	3.58	24.02
6265Y	22.4401 22.4373	1.57	1.34	12	28.03	15	17.83	28.98	M30	3.35	25.98

Model CHFM	LOW SPEED SHAFT				
	U*	V	S	L1	KEY
6255Y	6.250	9.45	1-1/4-7UNC	1.93	1-1/2 X 1 X 9.45
6265Y	6.625	11.81	1-1/4-7UNC	1.93	1-3/4 X 1-1/4 X 11.8

*** Shaft Tolerances:**

Shaft Nominal Diameter (inches)	Tolerances (inches)
3.250 (3 1/4) through 4.625 (4 5/8)	+0.0000/-0.0009
4.750 (4 3/4) through 7.000 (7)	+0.0000/-0.0010

Model	Motor		Without Brake				Appx Wt (lb)	With Brake						Appx Wt (lb)
	HP	Pole	C	AB	L	MP		C	AB	L	MP	MS	MT	
CHFM256-6255Y	25	6	55.12	11.69	13.39	15.51	2176	63.39	11.69	21.65	15.51	14.45	-	2280
CHFM306-6255Y	30	6	55.12	11.69	13.39	15.51	2176	63.39	11.69	21.65	15.51	14.57	-	2280
CHFM406-6255Y	40	6	59.65	11.69	16.93	15.51	2276	68.11	11.69	25.39	15.51	17.52	-	2470
CHFM506-6255Y	50	6	59.65	11.69	16.93	15.51	2276	68.11	11.69	25.39	15.51	17.52	-	2470
CHFM606-6255Y	60	6	61.81	16.22	18.31	19.06	2452	-	-	-	-	-	-	-
CHFM756-6255Y	75	6	64.96	16.22	19.88	19.09	2573	-	-	-	-	-	-	-
CHFM406-6265Y	40	6	64.25	11.69	16.93	15.51	2800	72.72	11.69	25.39	15.51	17.52	-	2994
CHFM506-6265Y	50	6	64.25	11.69	16.93	15.51	2800	72.72	11.69	25.39	15.51	17.52	-	2994
CHFM606-6265Y	60	6	66.42	16.22	18.31	19.06	3010	-	-	-	-	-	-	-

Metric (mm)[1]

Model CHFM	B g6	G	H	NO	M	N	O	P	Q	S1	AH
6255	540	30	27	12	616	15	386	670	M24	91	610
6265	570	40	34	12	712	15	453	736	M30	85	660

Model CHFM	LOW SPEED SHAFT				
	U h6	V	S	L1	KEY
6255	160	240	M30	49	40 X 22 X 240
6265	170	300	M30	49	40 X 22 X 300

Model	Motor		Without Brake				Appx Wt (kg)	With Brake						Appx Wt (kg)
	kW	Pole	C	AB	L	MP		C	AB	L	MP	MS	MT	
CHFM256-6255	18.5	6	1400	297	340	394	987	1610	297	550	394	367	-	1034
CHFM306-6255	22	6	1400	297	340	394	987	1610	297	550	394	370	-	1034
CHFM406-6255	30	6	1515	297	430	394	1032	1730	297	645	394	445	-	1120
CHFM506-6255	37	6	1515	297	430	394	1032	1730	297	645	394	445	-	1120
CHFM606-6255	45	6	1570	412	465	484	1112	-	-	-	-	-	-	-
CHFM756-6255	55	6	1650	412	505	485	1167	-	-	-	-	-	-	-
CHFM406-6265	30	6	1632	297	430	394	1270	1847	297	645	394	445	-	1358
CHFM506-6265	37	6	1632	297	430	394	1270	1847	297	645	394	445	-	1358
CHFM606-6265	45	6	1687	412	465	484	1365	-	-	-	-	-	-	-

Notes: [1] The shaft dimensions shown above are hard metric sizes with metric keys. Units are available with shafting made to either DIN/ISO or JIS tolerances. Please consult factory for availability.

Dimensions shown are for reference only and are subject to change without notice, unless certified.
Certified prints are available after receipt of an order; consult factory.

CVFM-613□~614□[1]

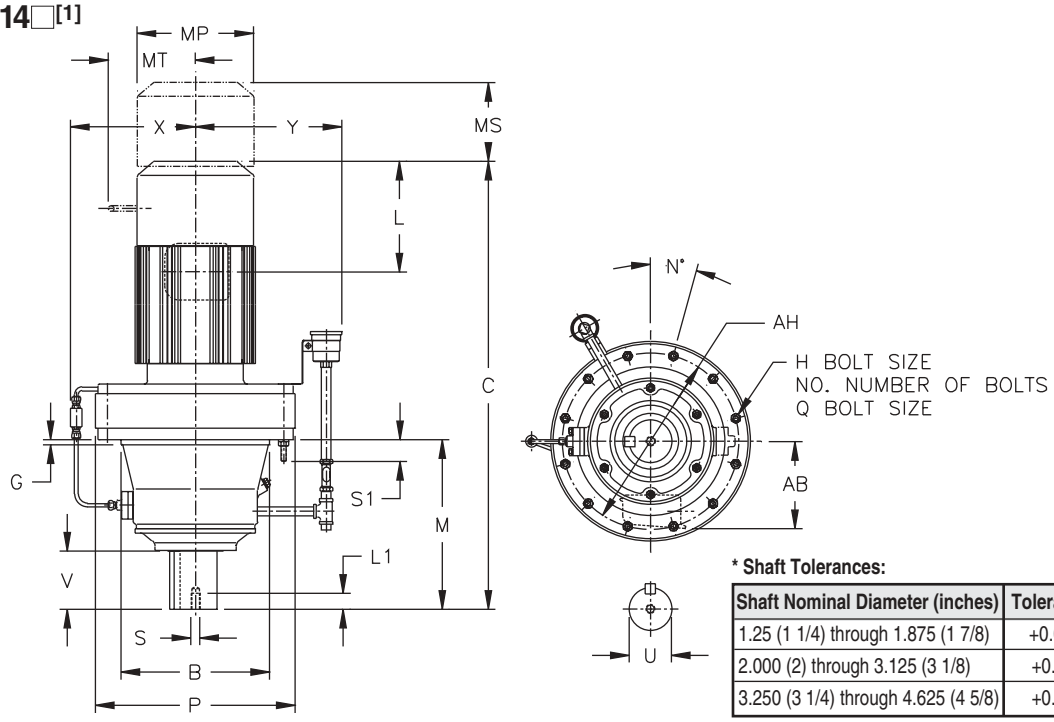

*** Shaft Tolerances:**

Shaft Nominal Diameter (inches)	Tolerances (inches)
1.25 (1 1/4) through 1.875 (1 7/8)	+0.0000/-0.0006
2.000 (2) through 3.125 (3 1/8)	+0.0000/-0.0007
3.250 (3 1/4) through 4.625 (4 5/8)	+0.0000/-0.0009

Inch (in)

Model CVFM	B	C	G	H	NO	M	N	P	Q	S1	AH	X	Y
613□Y	6.4955 6.4945	12.64	0.63	0.43	6	7.01	60	9.06	M10	1.22	8.07	5.98	8.23
614□Y	6.4955 6.4945	13.43	0.63	0.43	6	7.80	60	9.06	M10	1.22	8.07	5.98	8.23

Model CVFM	LOW SPEED SHAFT				
	U*	V	S	L1	KEY
613□Y	1.875	2.40	3/8-16UNC	0.71	1/2 X 1/2 X 2.16
614□Y	1.875	3.19	3/8-16UNC	0.71	1/2 X 1/2 X 2.95

Model	Motor		Without Brake				Appx Wt (lb)	With Brake						Appx Wt (lb)
	HP	Pole	C	AB	L	MP		C	AB	L	MP	MS	MT	
CVFM1-613□Y	1	4	18.78	4.49	3.82	5.83	95	20.47	5.59	5.51	5.83	3.66	4.17	106
CVFM1H-613□Y	1.5	4	20.08	4.69	3.94	6.30	104	22.52	5.79	6.38	6.30	4.53	4.49	115
CVFM2-613□Y	2	4	20.08	4.69	3.94	6.30	104	22.52	5.79	6.38	6.30	4.53	4.49	115
CVFM3-613□Y	3	4	20.87	4.96	4.13	6.81	110	23.35	6.06	6.61	6.81	4.76	4.88	126
CVFM5-613□Y	5	4	21.77	5.79	5.00	8.35	132	24.61	6.69	7.83	8.35	5.20	6.18	154
CVFM8-613□Y	7.5	4	23.50	5.79	5.00	8.35	148	26.34	6.69	7.83	8.35	5.20	6.18	170
CVFM10-613□Y	10	4	24.41	7.40	5.63	9.88	181	28.15	7.40	9.37	9.88	6.69	7.17	221
CVFM15-613□Y	15	4	26.77	7.40	5.63	9.88	212	30.51	7.40	9.37	9.88	6.69	7.17	251
CVFM1H-614□Y	1.5	4	20.87	4.69	3.94	6.30	106	23.31	5.79	6.38	6.30	4.53	4.49	117
CVFM2-614□Y	2	4	20.87	4.69	3.94	6.30	106	23.31	5.79	6.38	6.30	4.53	4.49	117
CVFM3-614□Y	3	4	21.65	4.96	4.13	6.81	112	24.13	6.06	6.61	6.81	4.76	4.88	128
CVFM5-614□Y	5	4	22.56	5.79	5.00	8.35	135	25.39	6.69	7.83	8.35	5.20	6.18	157
CVFM8-614□Y	7.5	4	24.29	5.79	5.00	8.35	150	27.13	6.69	7.83	8.35	5.20	6.18	172
CVFM10-614□Y	10	4	25.20	7.40	5.63	9.88	183	28.94	7.40	9.37	9.88	6.69	7.17	223
CVFM15-614□Y	15	4	27.56	7.40	5.63	9.88	214	31.30	7.40	9.37	9.88	6.69	7.17	254
CVFM20-614□Y	20	4	31.10	9.13	11.61	12.76	329	34.65	9.13	15.16	12.76	8.66	-	401

Note: [1] 0 or 5 replaces □ depending on the model selected for the application. Please refer to the Gearmotor Selection Procedure and Tables in this section.

Dimensions shown are for reference only and are subject to change without notice, unless certified.
Certified prints are available after receipt of an order; consult factory.

INTEGRAL F-FLANGE MOUNT
SINGLE REDUCTION

CVFM-616□~619□[1]

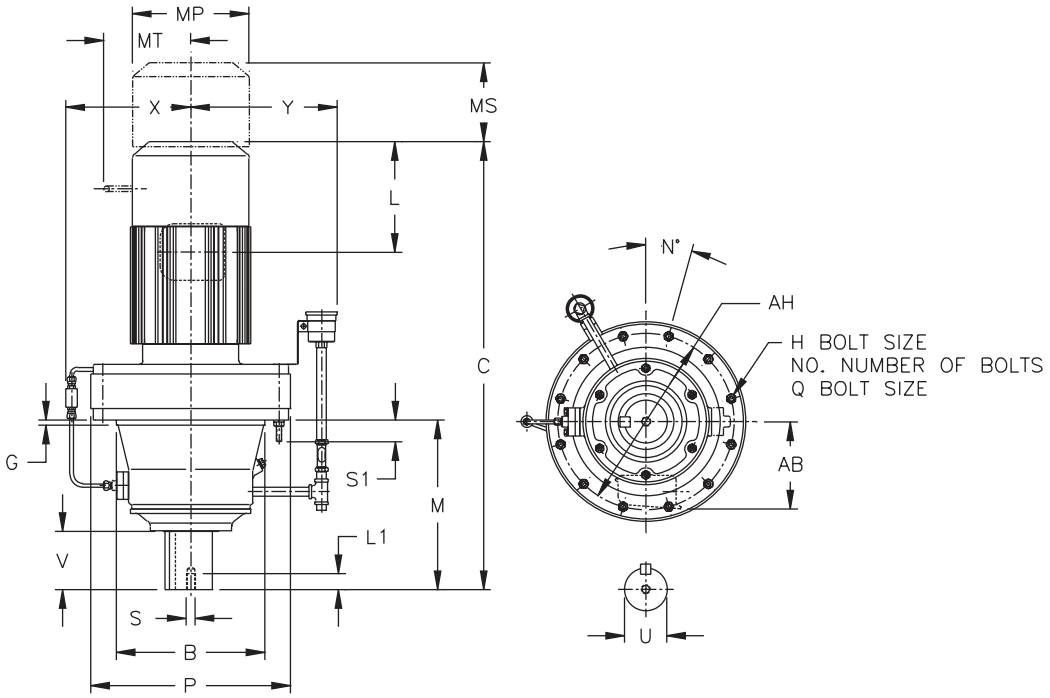

Inch (in)

Model CVFM	B	C	G	H	NO	M	N	P	Q	S1	AH	X	Y
616□Y	7.8734 7.8723	16.26	0.39	0.55	6	8.74	30	11.81	M12	1.38	10.63	8.54	9.06
617□Y	9.8419 9.8408	18.78	0.47	0.55	8	10.31	22.5	13.39	M12	1.61	11.81	8.74	10.24
618□Y	11.0230 11.0217	20.75	0.47	0.55	8	11.77	22.5	14.57	M12	1.50	12.99	9.33	10.24
619□Y	12.5977 12.5963	24.41	0.39	0.55	12	14.37	15	16.93	M12	1.61	14.96	10.43	10.24

Model CVFM	LOW SPEED SHAFT				
	U*	V	S	L1	KEY
616□Y	2.250	3.15	3/8-16UNC	0.71	1/2 X 1/2 X 2.95
617□Y	2.750	3.31	1/2-13UNC	0.94	5/8 X 5/8 X 3.15
618□Y	3.125	3.94	1/2-13UNC	0.94	3/4 X 3/4 X 3.74
619□Y	3.625	4.92	3/4-10UNC	1.34	7/8 X 7/8 X 4.92

Note: [1] 0 or 5 replaces □ depending on the model selected for the application. Please refer to the Gearmotor Selection Procedure and Tables in this section.

*** Shaft Tolerances:**

Shaft Nominal Diameter (inches)	Tolerances (inches)
1.25 (1 1/4) through 1.875 (1 7/8)	+0.0000/-0.0006
2.000 (2) through 3.125 (3 1/8)	+0.0000/-0.0007
3.250 (3 1/4) through 4.625 (4 5/8)	+0.0000/-0.0009

Dimensions shown are for reference only and are subject to change without notice, unless certified. Certified prints are available after receipt of an order; consult factory.

CVFM-616□~619□[1] (con't.)

Inch (in)

Model	Motor		Without Brake				Appx Wt (lb)	With Brake						Appx Wt (lb)
	HP	Pole	C	AB	L	MP		C	AB	L	MP	MS	MT	
CVFM2-616□Y	2	4	22.95	4.69	3.94	6.30	165	25.39	5.79	6.38	6.30	4.53	4.49	176
CVFM3-616□Y	3	4	23.54	4.96	4.13	6.81	172	26.02	6.06	6.61	6.81	4.76	4.88	185
CVFM5-616□Y	5	4	24.45	5.79	5.00	8.35	192	27.28	6.69	7.83	8.35	5.20	6.18	214
CVFM8-616□Y	7.5	4	26.18	5.79	5.00	8.35	207	29.02	6.69	7.83	8.35	5.20	6.18	229
CVFM10-616□Y	10	4	27.28	7.40	5.63	9.88	243	31.02	7.40	9.37	9.88	6.69	7.17	280
CVFM15-616□Y	15	4	29.65	7.40	5.63	9.88	273	33.39	7.40	9.37	9.88	6.69	7.17	311
CVFM20-616□Y	20	4	32.99	9.13	11.61	12.76	390	36.54	9.13	15.16	12.76	8.66	-	463
CVFM25-616□Y	25	4	36.73	11.69	13.39	15.51	549	45.00	11.69	21.65	15.51	14.45	-	662
CVFM30-616□Y	30	4	36.73	11.69	13.39	15.51	549	45.00	11.69	21.65	15.51	14.45	-	662
CVFM5-617□Y	5	4	26.77	5.79	5.00	8.35	260	29.61	6.69	7.83	8.35	5.20	6.18	282
CVFM8-617□Y	7.5	4	28.50	5.79	5.00	8.35	276	31.34	6.69	7.83	8.35	5.20	6.18	298
CVFM10-617□Y	10	4	29.21	7.40	5.63	9.88	309	32.95	7.40	9.37	9.88	6.69	7.17	348
CVFM15-617□Y	15	4	31.57	7.40	5.63	9.88	340	35.31	7.40	9.37	9.88	6.69	7.17	379
CVFM20-617□Y	20	4	34.72	9.13	11.61	12.76	459	38.27	9.13	15.16	12.76	8.66	-	531
CVFM25-617□Y	25	4	38.46	11.69	13.39	15.51	609	46.73	11.69	21.65	15.51	14.45	-	721
CVFM30-617□Y	30	4	38.46	11.69	13.39	15.51	609	46.73	11.69	21.65	15.51	14.45	-	721
CVFM40-617□Y	40	4	38.46	11.69	13.39	15.51	646	46.73	11.69	21.65	15.51	14.57	-	741
CVFM5-618□Y	5	4	28.23	5.79	5.00	8.35	326	31.06	6.69	7.83	8.35	5.20	6.18	348
CVFM8-618□Y	7.5	4	29.96	5.79	5.00	8.35	344	32.80	6.69	7.83	8.35	5.20	6.18	366
CVFM10-618□Y	10	4	30.67	7.40	5.63	9.88	377	34.41	7.40	9.37	9.88	6.69	7.17	417
CVFM15-618□Y	15	4	33.03	7.40	5.63	9.88	408	36.77	7.40	9.37	9.88	6.69	7.17	448
CVFM20-618□Y	20	4	36.18	9.13	11.61	12.76	540	39.72	9.13	15.16	12.76	8.66	-	602
CVFM25-618□Y	25	4	39.92	11.69	13.39	15.51	677	48.19	11.69	21.65	15.51	14.45	-	789
CVFM30-618□Y	30	4	39.92	11.69	13.39	15.51	677	48.19	11.69	21.65	15.51	14.45	-	789
CVFM40-618□Y	40	4	39.92	11.69	13.39	15.51	714	48.19	11.69	21.65	15.51	14.57	-	809
CVFM50-618□Y	50	4	44.45	11.69	16.93	15.51	820	52.91	11.69	25.39	15.51	17.52	-	1034
CVFM60-618□Y	60	4	44.45	11.69	16.93	15.51	820	52.91	11.69	25.39	15.51	17.52	-	1034
CVFM8-619□Y	7.5	4	33.74	5.79	5.00	8.35	476	36.57	6.69	7.83	8.35	5.20	6.18	498
CVFM10-619□Y	10	4	34.25	7.40	5.63	9.88	505	37.99	7.40	9.37	9.88	6.69	7.17	545
CVFM15-619□Y	15	4	36.61	7.40	5.63	9.88	536	40.35	7.40	9.37	9.88	6.69	7.17	576
CVFM20-619□Y	20	4	39.17	9.13	11.61	12.76	653	42.72	9.13	15.16	12.76	8.66	-	728
CVFM25-619□Y	25	4	42.91	11.69	13.39	15.51	811	51.18	11.69	21.65	15.51	14.45	-	911
CVFM256-619[Y]	25	6	42.91	11.69	13.39	15.51	845	51.18	11.69	21.65	15.51	14.45	-	939
CVFM30-619□Y	30	4	42.91	11.69	13.39	15.51	811	51.18	11.69	21.65	15.51	14.45	-	911
CVFM40-619□Y	40	4	42.91	11.69	13.39	15.51	845	51.18	11.69	21.65	15.51	14.45	-	939
CVFM406-619[Y]	40	6	47.44	11.69	16.93	15.51	928	55.91	11.69	25.39	15.51	17.52	-	1142
CVFM50-619□Y	50	4	47.44	11.69	16.93	15.51	928	55.91	11.69	25.39	15.51	17.52	-	1142
CVFM506-619[Y]	50	6	47.44	11.69	16.93	15.51	928	55.91	11.69	25.39	15.51	17.52	-	1142
CVFM60-619□Y	60	4	47.44	11.69	16.93	15.51	928	55.91	11.69	25.39	15.51	17.52	-	1142

Note: [1] 0 or 5 replaces □ depending on the model selected for the application. Please refer to the Gearmotor Selection Procedure and Tables in this section.

INTEGRAL F-FLANGE MOUNT
SINGLE REDUCTION

CVFM-613□~619□[1]

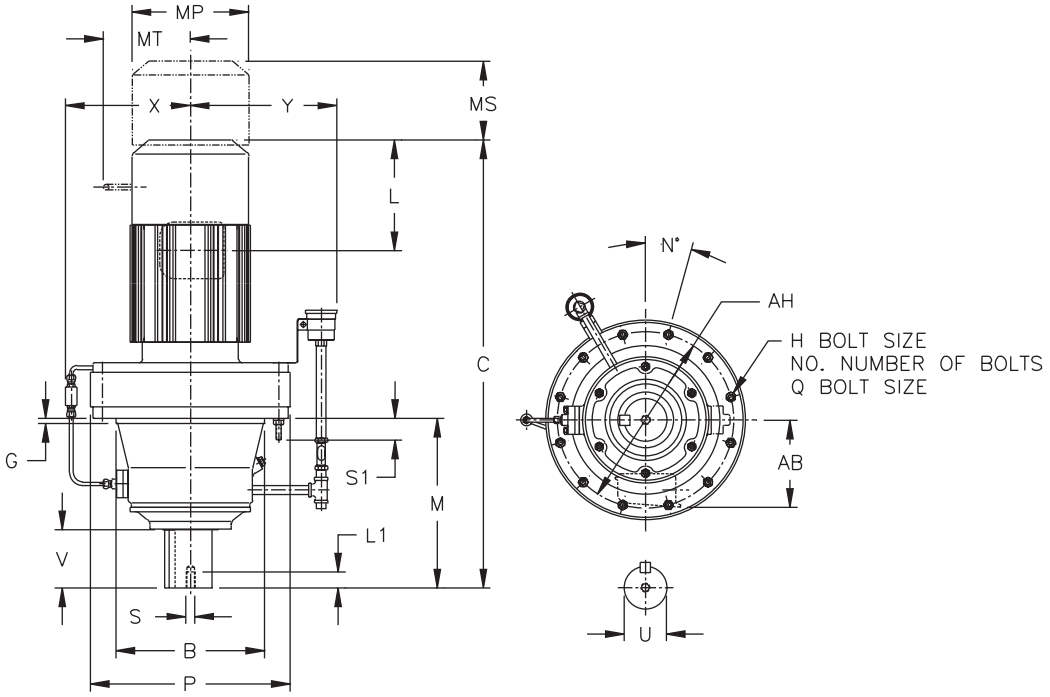

Metric (mm)[2]

Model CVFM	B g6	C	G	H	NO	M	N	P	Q	S1	AH	X	Y
613□	165	321	16	11	6	178	60	230	M10	31	205	152	209
614□	165	341	16	11	6	198	60	230	M10	31	205	152	209
616□	200	413	10	14	6	222	30	300	M12	35	270	217	230
617□	250	477	12	14	8	262	22.5	340	M12	41	300	222	260
618□	280	527	12	14	8	299	22.5	370	M12	38	330	237	260
619□	320	620	10	14	12	365	15	430	M12	41	380	265	260

Model CVFM	LOW SPEED SHAFT				
	U h6	V	S	L1	KEY
613□	50	61	M10	18	14 X 9 X 56
614□	50	81	M10	18	14 X 9 X 80
616□	60	80	M10	18	18 X 11 X 80
617□	70	84	M12	24	20 X 12 X 80
618□	80	100	M12	24	22 X 14 X 100
619□	95	125	M20	34	25 X 14 X 125

Model	Motor		Without Brake				Appx Wt (kg)	With Brake						Appx Wt (kg)
	kW	Pole	C	AB	L	MP		C	AB	L	MP	MS	MT	
CVFM1-613□	0.75	4	477	114	97	148	43	520	142	140	148	93	106	48
CVFM1H-613□	1.1	4	510	119	100	160	47	572	147	162	160	115	114	52
CVFM2-613□	1.5	4	510	119	100	160	47	572	147	162	160	115	114	52
CVFM3-613□	2.2	4	530	126	105	173	50	593	154	168	173	121	124	57
CVFM5-613□	3.7	4	553	147	127	212	60	625	170	199	212	132	157	70
CVFM8-613□	5.5	4	597	147	127	212	67	669	170	199	212	132	157	77
CVFM10-613□	7.5	4	620	188	143	251	82	715	188	238	251	170	182	100
CVFM15-613□	11	4	680	188	143	251	96	775	188	238	251	170	182	114

Notes: [1] 0 or 5 replaces □ depending on the model selected for the application. Please refer to the Gearmotor Selection Procedure and Tables in this section.
[2] The shaft dimensions shown above are hard metric sizes with metric keys. Units are available with shafting made to either DIN/ISO or JIS tolerances. Please consult factory for availability.

Dimensions shown are for reference only and are subject to change without notice, unless certified.
Certified prints are available after receipt of an order; consult factory.

CVFM-613□~619□[1] (con't.)

Metric (mm)

Model	Motor		Without Brake				Appx Wt (kg)	With Brake						Appx Wt (kg)
	kW	Pole	C	AB	L	MP		C	AB	L	MP	MS	MT	
CVFM1H-614□	1.1	4	530	119	100	160	48	592	147	162	160	115	114	53
CVFM2-614□	1.5	4	530	119	100	160	48	592	147	162	160	115	114	53
CVFM3-614□	2.2	4	550	126	105	173	51	613	154	168	173	121	124	58
CVFM5-614□	3.7	4	573	147	127	212	61	645	170	199	212	132	157	71
CVFM8-614□	5.5	4	617	147	127	212	68	689	170	199	212	132	157	78
CVFM10-614□	7.5	4	640	188	143	251	83	735	188	238	251	170	182	101
CVFM15-614□	11	4	700	188	143	251	97	795	188	238	251	170	182	115
CVFM20-614□	15	4	790	232	295	324	149	880	232	385	324	220	-	182
CVFM2-616□	1.5	4	583	119	100	160	75	645	147	162	160	115	114	80
CVFM3-616□	2.2	4	598	126	105	173	78	661	154	168	173	121	124	84
CVFM5-616□	3.7	4	621	147	127	212	87	693	170	199	212	132	157	97
CVFM8-616□	5.5	4	665	147	127	212	94	737	170	199	212	132	157	104
CVFM10-616□	7.5	4	693	188	143	251	110	788	188	238	251	170	182	127
CVFM15-616□	11	4	753	188	143	251	124	848	188	238	251	170	182	141
CVFM20-616□	15	4	838	232	295	324	177	928	232	385	324	220	-	210
CVFM25-616□	18.5	4	933	297	340	394	249	1143	297	550	394	367	-	300
CVFM30-616□	22	4	933	297	340	394	249	1143	297	550	394	367	-	300
CVFM5-617□	3.7	4	680	147	127	212	118	752	170	199	212	132	157	128
CVFM8-617□	5.5	4	724	147	127	212	125	796	170	199	212	132	157	135
CVFM10-617□	7.5	4	742	188	143	251	140	837	188	238	251	170	182	158
CVFM15-617□	11	4	802	188	143	251	154	897	188	238	251	170	182	172
CVFM20-617□	15	4	882	232	295	324	208	972	232	385	324	220	-	241
CVFM25-617□	18.5	4	977	297	340	394	276	1187	297	550	394	367	-	327
CVFM30-617□	22	4	977	297	340	394	276	1187	297	550	394	367	-	327
CVFM40-617□	30	4	977	297	340	394	293	1187	297	550	394	370	-	336
CVFM5-618□	3.7	4	717	147	127	212	148	789	170	199	212	132	157	158
CVFM8-618□	5.5	4	761	147	127	212	156	833	170	199	212	132	157	166
CVFM10-618□	7.5	4	779	188	143	251	171	874	188	238	251	170	182	189
CVFM15-618□	11	4	839	188	143	251	185	934	188	238	251	170	182	203
CVFM20-618□	15	4	919	232	295	324	245	1009	232	385	324	220	-	273
CVFM25-618□	18.5	4	1014	297	340	394	307	1224	297	550	394	367	-	358
CVFM30-618□	22	4	1014	297	340	394	307	1224	297	550	394	367	-	358
CVFM40-618□	30	4	1014	297	340	394	324	1224	297	550	394	370	-	367
CVFM50-618□	37	4	1129	297	430	394	372	1344	297	645	394	445	-	469
CVFM60-618□	45	4	1129	297	430	394	372	1344	297	645	394	445	-	469
CVFM8-619□	5.5	4	857	147	127	212	216	929	170	199	212	132	157	226
CVFM10-619□	7.5	4	870	188	143	251	229	965	188	238	251	170	182	247
CVFM15-619□	11	4	930	188	143	251	243	1025	188	238	251	170	182	261
CVFM20-619□	15	4	995	232	295	324	296	1085	232	385	324	220	-	330
CVFM25-619□	18.5	4	1090	297	340	394	368	1300	297	550	394	367	-	413
CVFM256-619□	18.5	6	1090	297	340	394	383	1300	297	550	394	367	-	426
CVFM30-619□	22	4	1090	297	340	394	368	1300	297	550	394	367	-	413
CVFM40-619□	30	4	1090	297	340	394	383	1300	297	550	394	367	-	426
CVFM406-619□	30	6	1205	297	430	394	421	1420	297	645	394	445	-	518
CVFM50-619□	37	4	1205	297	430	394	421	1420	297	645	394	445	-	518
CVFM506-619□	37	6	1205	297	430	394	421	1420	297	645	394	445	-	518
CVFM60-619□	45	4	1205	297	430	394	421	1420	297	645	394	445	-	518

Note: [1] 0 or 5 replaces □ depending on the model selected for the application. Please refer to the Gearmotor Selection Procedure and Tables in this section.

Dimensions shown are for reference only and are subject to change without notice, unless certified.
Certified prints are available after receipt of an order; consult factory.

INTEGRAL F-FLANGE MOUNT
DOUBLE REDUCTION

CNFM-606□DA~612□DB[1]

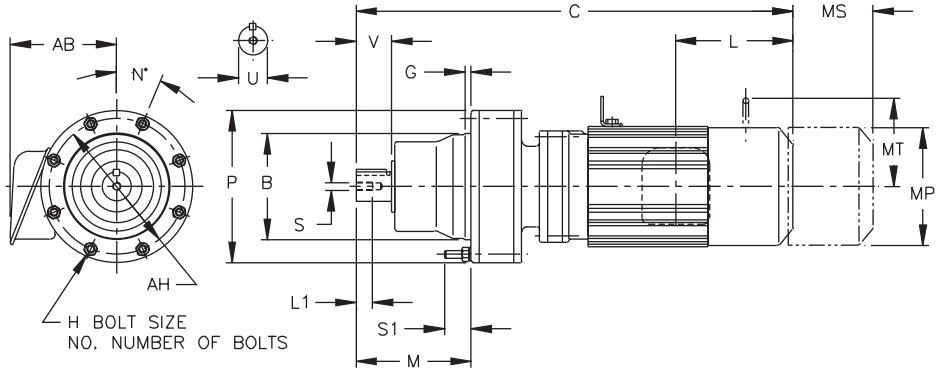

Inch (in)

Model CNFM	B	G	H	NO	M	N	P	Q	S1	AH
606□DAY	3.1492 3.1485	0.16	0.26	6	2.72	60	4.33	M6	0.83	3.86
607□DAY	3.1492 3.1485	0.16	0.26	6	2.91	60	4.33	M6	0.83	3.86
609□DAY	4.1334 4.1325	0.24	0.35	8	4.49	22.5	5.91	M8	1.14	5.28
610□DAY	4.1334 4.1325	0.24	0.35	8	4.49	22.5	5.91	M8	1.10	5.28
612□DBY	5.5113 5.5103	0.55	0.43	6	5.47	60	8.03	M10	1.30	7.09

Model CNFM	LOW SPEED SHAFT				
	U*	V	L1	S	KEY
606□DAY	0.500	0.98	0.63	10-32UNF	1/8 X 1/8 X .79
607□DAY	0.750	1.18	0.63	12-28UNF	3/16 X 3/16 X 1.06
609□DAY	1.125	1.38	0.79	5/16-18UNC	1/4 X 1/4 X 1.18
610□DAY	1.125	1.38	0.79	5/16-18UNC	1/4 X 1/4 X 1.18
612□DBY	1.500	2.17	0.79	5/16-18UNC	3/8 X 3/8 X 1.77

*** Shaft Tolerances:**

Shaft Nominal Diameter (inches)	Tolerances (inches)
0.500 (1/2) through 0.625 (5/8)	+0.0000/-0.0004
0.750 (3/4) through 1.125 (1 1/8)	+0.0000/-0.0005
1.25 (1 1/4) through 1.875 (1 7/8)	+0.0000/-0.0006

Model	Motor		Without Brake				Appx Wt (lb)	With Brake						Appx Wt (lb)
	HP	Pole	C	AB	L	MP		C	AB	L	MP	MS	MT	
CNFM01-606□DAY	1/8	4	10.20	3.35	1.38	4.69	15	11.57	3.50	4.88	4.88	-	0.33	19
CNFM01-607□DAY	1/8	4	10.43	3.35	1.38	4.69	18	11.81	3.50	4.88	4.88	-	0.37	21
CNFM02-607□DAY	1/4	4	12.09	3.35	2.32	4.88	20	13.35	3.50	4.88	4.88	-	0.43	24
CNFM01-609□DAY	1/8	4	12.76	3.35	1.38	4.69	29	14.13	3.50	4.88	4.88	-	0.55	31
CNFM02-609□DAY	1/4	4	14.41	3.35	2.32	4.88	31	15.67	3.50	4.88	4.88	-	0.59	33
CNFM03-609□DAY	1/3	4	14.41	3.35	2.32	4.88	31	15.67	3.50	4.88	4.88	-	0.59	33
CNFM05-609□DAY	1/2	4	15.20	3.35	2.32	4.88	33	16.46	3.50	4.88	4.88	-	0.63	35
CNFM01-610□DAY	1/8	4	13.31	3.35	1.38	4.69	31	14.69	3.50	4.88	4.88	-	0.59	33
CNFM02-610□DAY	1/4	4	14.96	3.35	2.32	4.88	33	16.22	3.50	4.88	4.88	-	0.63	35
CNFM03-610□DAY	1/3	4	14.96	3.35	2.32	4.88	33	16.22	3.50	4.88	4.88	-	0.63	35
CNFM05-610□DAY	1/2	4	15.75	3.35	2.32	4.88	35	17.01	3.50	4.88	4.88	-	0.67	37
CNFM01-612□DBY	1/8	4	15.20	3.35	1.38	4.69	62	16.57	3.50	4.88	4.88	-	1.18	66
CNFM03-612□DBY	1/3	4	16.85	3.35	2.32	4.88	64	18.62	3.50	4.88	4.88	-	1.22	68
CNFM05-612□DBY	1/2	4	17.64	3.35	2.32	4.88	66	18.62	3.50	4.88	4.88	-	1.26	71
CNFM08-612□DBY	3/4	4	19.25	4.49	3.82	5.83	75	20.94	5.59	5.83	5.83	4.17	1.46	82
CNFM1-612□DBY	1	4	19.25	4.49	3.82	5.83	75	20.94	5.59	5.83	5.83	4.17	1.46	82
CNFM1H-612□DBY	1.5	4	20.31	4.69	3.94	6.30	84	22.76	5.79	6.30	6.30	4.49	1.69	95
CNFM2-612□DBY	2	4	20.31	4.69	3.94	6.30	84	22.76	5.79	6.30	6.30	4.49	1.69	95

Note: [1] 0 or 5 replaces □ depending on the model selected for the application. Please refer to the Gearmotor Selection Procedure and Tables in this section.

Dimensions shown are for reference only and are subject to change without notice, unless certified.
Certified prints are available after receipt of an order; consult factory.

CNFM-606□DA~612□DB[1] (con't.)

Metric (mm)[2]

Model	B g6	G	H	NO	M	N	P	Q	S1	AH
606□DA	80	4	6.6	6	69	60	110	M6	22	98
607□DA	80	4	6.6	6	74	60	110	M6	21	98
609□DA	105	6	9	8	114	22.5	150	M8	29	134
610□DA	105	6	9	8	114	22.5	150	M8	28	134
612□DB	140	14	11	6	139	60	204	M10	33	180

Model	LOW SPEED SHAFT				
	U h6	V	S	L1	KEY
606□DA	14	25	M5	16	5 X 5 X 20
607□DA	18	30	M6	16	6 X 6 X 25
609□DA	28	35	M8	20	8 X 7 X 32
610□DA	28	35	M8	20	8 X 7 X 32
612□DB	38	55	M8	20	10 X 8 X 50

Model	Motor		Without Brake				Appx Wt (kg)	With Brake						Appx Wt (kg)
	kW	Pole	C	AB	L	MP		C	AB	L	MP	MS	MT	
CNFM01-606□DA	0.1	4	259	85	35	119	7	294	89	70	124	49	-	8.5
CNFM01-607□DA	0.1	4	265	85	35	119	8	300	89	70	124	49	-	9.5
CNFM02-607□DA	0.2	4	307	85	59	124	9	339	89	91	124	61	-	11
CNFM01-609□DA	0.1	4	324	85	35	119	13	359	89	70	124	49	-	14
CNFM02-609□DA	0.2	4	366	85	59	124	14	398	89	91	124	61	-	15
CNFM03-609□DA	0.25	4	366	85	59	124	14	398	89	91	124	61	-	15
CNFM05-609□DA	0.4	4	386	85	59	124	15	418	89	91	124	61	-	16
CNFM01-610□DA	0.1	4	338	85	35	119	14	373	89	70	124	49	-	15
CNFM02-610□DA	0.2	4	380	85	59	124	15	412	89	91	124	61	-	16
CNFM03-610□DA	0.25	4	380	85	59	124	15	412	89	91	124	61	-	16
CNFM05-610□DA	0.4	4	400	85	59	124	16	432	89	91	124	61	-	17
CNFM01-612□DB	0.1	4	386	85	35	119	28	421	89	70	124	49	-	30
CNFM03-612□DB	0.25	4	428	85	59	124	29	473	89	91	124	61	-	31
CNFM05-612□DB	0.4	4	448	85	59	124	30	473	89	91	124	61	-	32
CNFM08-612□DB	0.55	4	489	114	97	148	34	532	142	140	148	93	106	37
CNFM1-612□DB	0.75	4	489	114	97	148	34	532	142	140	148	93	106	37
CNFM1H-612□DB	1.1	4	516	119	100	160	38	578	147	162	160	115	114	43
CNFM2-612□DB	1.5	4	516	119	100	160	38	578	147	162	160	115	114	43

Notes: [1] 0 or 5 replaces □ depending on the model selected for the application. Please refer to the Gearmotor Selection Procedure and Tables in this section.
[2] The shaft dimensions shown above are hard metric sizes with metric keys. Units are available with shafting made to either DIN/ISO or JIS tolerances. Please consult factory for availability.

INTEGRAL F-FLANGE MOUNT
DOUBLE REDUCTION

CHFM-613□DC~614□DB[1]

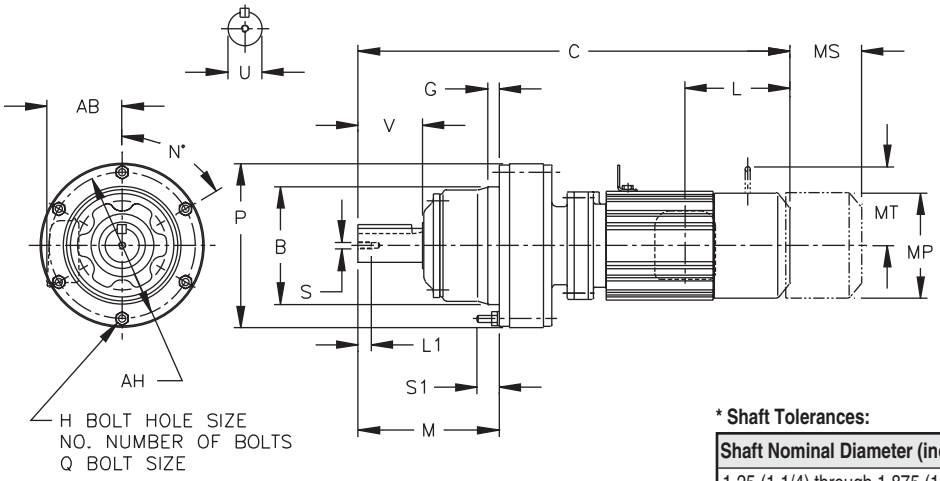

*** Shaft Tolerances:**

Shaft Nominal Diameter (inches)	Tolerances (inches)
1.25 (1 1/4) through 1.875 (1 7/8)	+0.0000/-0.0006

Inch (in)

Model CHFM	B	C	G	H	NO	M	N	O	P	Q	S1	AH
613□DCY	6.4955 6.4945	14.53	0.63	0.43	6	7.01	60	5.91	9.06	M10	1.22	8.07
614□DBY	6.4955 6.4945	15.08	0.63	0.43	6	7.80	60	5.91	9.06	M10	1.22	8.07

Model CHFM	LOW SPEED SHAFT				
	U*	V	L1	S	KEY
613□DCY	1.88	2.76	0.71	3/8-16UNC	1/2 X 1/2 X 2.16
614□DBY	1.88	3.54	0.71	3/8-16UNC	1/2 X 1/2 X 2.95

Model	Motor		Without Brake				Appx Wt (lb)	With Brake						Appx Wt (lb)
	HP	Pole	C	AB	L	MP		C	AB	L	MP	MS	MT	
CHFM02-613□DCY	1/4	4	19.41	3.35	2.32	4.88	95	20.67	3.50	3.58	4.88	2.40	-	99
CHFM03-613□DCY	1/3	4	19.41	3.35	2.32	4.88	95	20.67	3.50	3.58	4.88	2.40	-	99
CHFM05-613□DCY	1/2	4	20.20	3.35	2.32	4.88	97	21.46	3.50	3.58	4.88	2.40	-	101
CHFM08-613□DCY	3/4	4	21.81	4.49	3.82	5.83	106	23.50	5.59	5.51	5.83	3.66	4.17	112
CHFM1-613□DCY	1	4	21.81	4.49	3.82	5.83	106	23.50	5.59	5.51	5.83	3.66	4.17	112
CHFM1H-613□DCY	1.5	4	23.11	4.69	3.94	6.30	115	25.55	5.79	6.38	6.30	4.53	4.49	126
CHFM2-613□DCY	2	4	23.11	4.69	3.94	6.30	115	25.55	5.79	6.38	6.30	4.53	4.49	126
CHFM3-613□DCY	3	4	23.90	4.96	4.13	6.81	123	26.38	5.79	6.61	6.81	4.76	4.88	137
CHFM01-614□DBY	1/8	4	17.99	3.35	1.38	4.69	88	19.37	3.50	2.76	4.88	1.93	-	93
CHFM02-614□DBY	1/4	4	19.65	3.35	2.32	4.88	90	20.91	3.50	3.58	4.88	2.40	-	95
CHFM03-614□DBY	1/3	4	19.65	3.35	2.32	4.88	90	20.91	3.50	3.58	4.88	2.40	-	95
CHFM05-614□DBY	1/2	4	20.43	3.35	2.32	4.88	93	21.69	3.50	3.58	4.88	2.40	-	101
CHFM08-614□DBY	3/4	4	22.05	4.49	3.82	5.83	101	23.74	5.59	5.51	5.83	3.66	4.17	108
CHFM1-614□DBY	1	4	22.05	4.49	3.82	5.83	101	23.74	5.59	5.51	5.83	3.66	4.17	108
CHFM1H-614□DBY	1.5	4	23.35	4.69	3.94	6.30	110	25.79	5.79	6.38	6.30	4.53	4.49	117
CHFM2-614□DBY	2	4	23.35	4.69	3.94	6.30	110	25.79	5.79	6.38	6.30	4.53	4.49	117

Note: [1] 0 or 5 replaces □ depending on the model selected for the application. Please refer to the Gearmotor Selection Procedure and Tables in this section.

Dimensions shown are for reference only and are subject to change without notice, unless certified. Certified prints are available after receipt of an order; consult factory.

CHFM-613□DC~614□DB[1] (con't.)

Metric (mm)[2]

Model	B g6	G	H	NO	M	N	O	P	Q	S1	AH
613□DC	165	16	11	6	178	60	150	230	M10	31	205
614□DB	165	16	11	6	198	60	150	230	M10	31	205

Model	LOW SPEED SHAFT				
	U h6	V	S	L1	KEY
613□DC	50	70	M10	18	14 X 9 X 56
614□DB	50	90	M10	18	14 X 9 X 80

Model	Motor		Without Brake				Appx Wt (kg)	With Brake						Appx Wt (kg)
	kW	Pole	C	AB	L	MP		C	AB	L	MP	MS	MT	
CHFM02-613□DC	0.2	4	493	85	59	124	43	525	89	91	124	61	-	45
CHFM03-613□DC	0.25	4	493	85	59	124	43	525	89	91	124	61	-	45
CHFM05-613□DC	0.4	4	513	85	59	124	44	545	89	91	124	61	-	46
CHFM08-613□DC	0.55	4	554	114	97	148	48	597	142	140	148	93	106	51
CHFM1-613□DC	0.75	4	554	114	97	148	48	597	142	140	148	93	106	51
CHFM1H-613□DC	1.1	4	587	119	100	160	52	649	147	162	160	115	114	57
CHFM2-613□DC	1.5	4	587	119	100	160	52	649	147	162	160	115	114	57
CHFM3-613□DC	2.2	4	607	126	105	173	56	670	154	168	173	121	124	62
CHFM01-614□DB	0.1	4	457	85	35	119	40	492	89	70	124	49	-	42
CHFM02-614□DB	0.2	4	499	85	59	124	41	531	89	91	124	61	-	43
CHFM03-614□DB	0.25	4	499	85	59	124	41	531	89	91	124	61	-	43
CHFM05-614□DB	0.4	4	519	85	59	124	42	551	89	91	124	61	-	46
CHFM08-614□DB	0.55	4	560	114	97	148	46	603	142	140	148	93	106	49
CHFM1-614□DB	0.75	4	560	114	97	148	46	603	142	140	148	93	106	49
CHFM1H-614□DB	1.1	4	593	119	100	160	50	655	147	162	160	115	114	53
CHFM2-614□DB	1.5	4	593	119	100	160	50	655	147	162	160	115	114	53

Notes: [1] 0 or 5 replaces □ depending on the model selected for the application. Please refer to the Gearmotor Selection Procedure and Tables in this section.
[2] The shaft dimensions shown above are hard metric sizes with metric keys. Units are available with shafting made to either DIN/ISO or JIS tolerances. Please consult factory for availability.

INTEGRAL F-FLANGE MOUNT
DOUBLE REDUCTION

CHFM-616□DC~617□DC[1]

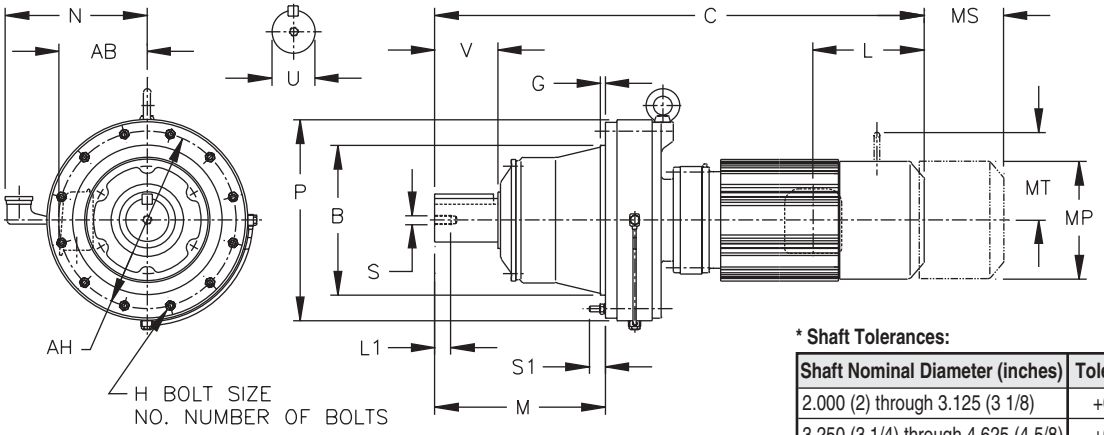

*** Shaft Tolerances:**

Shaft Nominal Diameter (inches)	Tolerances (inches)
2.000 (2) through 3.125 (3 1/8)	+0.0000/-0.0007
3.250 (3 1/4) through 4.625 (4 5/8)	+0.0000/-0.0009
4.750 (4 3/4) through 7.000 (7)	+0.0000/-0.0010

Inch (in)

Model CHFM	B	G	H	NO	M	N	O	P	Q	S1	AH	X
616□DCY	7.8734 7.8723	0.39	0.55	6	8.74	30	7.44	11.81	M12	1.38	10.63	8.98
617□DCY	9.8419 9.8408	0.47	0.55	8	10.31	22.5	8.50	13.39	M12	1.61	11.81	9.57

Model CHFM	LOW SPEED SHAFT				
	U*	V	S	L1	KEY
616□DCY	2.250	3.54	3/8-16UNC	0.71	1/2 X 1/2 X 2.95
617□DCY	2.750	3.54	1/2-13UNC	0.94	5/8 X 5/8 X 3.15

Model	Motor		Without Brake				Appx Wt (lb)	With Brake						Appx Wt (lb)
	HP	Pole	C	AB	L	MP		C	AB	L	MP	MS	MT	
CHFM05-616□DCY	1/2	4	23.07	3.35	2.32	4.88	176	24.49	3.50	3.58	4.88	2.40	-	181
CHFM08-616□DCY	3/4	4	24.65	4.49	3.82	5.83	185	26.34	5.59	5.51	5.83	3.66	4.17	192
CHFM1-616□DCY	1	4	24.65	4.49	3.82	5.83	185	26.34	5.59	5.51	5.83	3.66	4.17	192
CHFM1H-616□DCY	1.5	4	25.94	4.69	3.94	6.30	194	28.39	5.79	6.38	6.30	4.53	4.49	205
CHFM2-616□DCY	2	4	25.94	4.69	3.94	6.30	194	28.39	5.79	6.38	6.30	4.53	4.49	205
CHFM3-616□DCY	3	4	26.73	4.96	2.32	6.81	203	29.21	6.06	3.58	6.81	2.40	-	218
CHFM5-616□DCY	5	4	27.64	5.79	5.00	8.35	225	30.47	6.69	7.83	8.35	5.20	6.18	247
CHFM8-616□DCY	7.5	4	29.37	5.79	5.00	8.35	240	32.20	6.69	7.83	8.35	5.20	6.18	262
CHFM05-617□DCY	1/2	4	24.92	3.35	2.32	4.88	229	26.34	3.50	3.58	4.88	2.40	-	234
CHFM08-617□DCY	3/4	4	26.50	4.49	3.82	5.83	238	28.19	5.59	5.51	5.83	3.66	4.17	245
CHFM1-617□DCY	1	4	26.50	4.49	3.82	5.83	238	28.19	5.59	5.51	5.83	3.66	4.17	245
CHFM1H-617□DCY	1.5	4	27.80	4.69	3.94	6.30	247	30.24	5.79	6.38	6.30	4.53	4.49	258
CHFM2-617□DCY	2	4	27.80	4.69	3.94	6.30	247	30.24	5.79	6.38	6.30	4.53	4.49	258
CHFM3-617□DCY	3	4	28.58	4.96	2.32	6.81	256	31.06	6.06	3.58	6.81	2.40	-	271
CHFM5-617□DCY	5	4	29.49	5.79	5.00	8.35	278	32.32	6.69	7.83	8.35	5.20	6.18	300
CHFM8-617□DCY	7.5	4	31.22	5.79	5.00	8.35	293	34.06	6.69	7.83	8.35	5.20	6.18	315

Note: [1] 0 or 5 replaces □ depending on the model selected for the application. Please refer to the Gearmotor Selection Procedure and Tables in this section.

Dimensions shown are for reference only and are subject to change without notice, unless certified.
Certified prints are available after receipt of an order; consult factory.

CHFM-616□DC~617□DC[1] (con't.)

Metric (mm)[2]

Model	B g6	G	H	NO	M	N	O	P	Q	S1	AH	X
616□DC	200	10	14	6	222	30	189	300	M12	35	270	228
617□DC	250	12	14	8	262	22.5	216	340	M12	41	300	243

Model	LOW SPEED SHAFT				
	Uh6	V	S	L1	KEY
616□DC	60	90	M10	18	18 X 11 X 80
617□DC	70	90	M12	24	20 X 12 X 80

Model	Motor		Without Brake				Appx Wt (kg)	With Brake						Appx Wt (kg)
	kW	Pole	C	AB	L	MP		C	AB	L	MP	MS	MT	
CHFM05-616□DC	0.4	4	586	85	59	124	80	622	89	91	124	61	-	82
CHFM08-616□DC	0.55	4	626	114	97	148	84	669	142	140	148	93	106	87
CHFM1-616□DC	0.75	4	626	114	97	148	84	669	142	140	148	93	106	87
CHFM1H-616□DC	1.1	4	659	119	100	160	88	721	147	162	160	115	114	93
CHFM2-616□DC	1.5	4	659	119	100	160	88	721	147	162	160	115	114	93
CHFM3-616□DC	2.2	4	679	126	59	173	92	742	154	91	173	61	-	99
CHFM5-616□DC	3.7	4	702	147	127	212	102	774	170	199	212	132	157	112
CHFM8-616□DC	5.5	4	746	147	127	212	109	818	170	199	212	132	157	119
CHFM05-617□DC	0.4	4	633	85	59	124	104	669	89	91	124	61	-	106
CHFM08-617□DC	0.55	4	673	114	97	148	108	716	142	140	148	93	106	111
CHFM1-617□DC	0.75	4	673	114	97	148	108	716	142	140	148	93	106	111
CHFM1H-617□DC	1.1	4	706	119	100	160	112	768	147	162	160	115	114	117
CHFM2-617□DC	1.5	4	706	119	100	160	112	768	147	162	160	115	114	117
CHFM3-617□DC	2.2	4	726	126	59	173	116	789	154	91	173	61	-	123
CHFM5-617□DC	3.7	4	749	147	127	212	126	821	170	199	212	132	157	136
CHFM8-617□DC	5.5	4	793	147	127	212	133	865	170	199	212	132	157	143

Notes: [1] 0 or 5 replaces □ depending on the model selected for the application. Please refer to the Gearmotor Selection Procedure and Tables in this section.
[2] The shaft dimensions shown above are hard metric sizes with metric keys. Units are available with shafting made to either DIN/ISO or JIS tolerances. Please consult factory for availability.

Dimensions shown are for reference only and are subject to change without notice, unless certified.
Certified prints are available after receipt of an order; consult factory.

INTEGRAL F-FLANGE MOUNT
DOUBLE REDUCTION

CHFM-618□DB~619□DB[1]

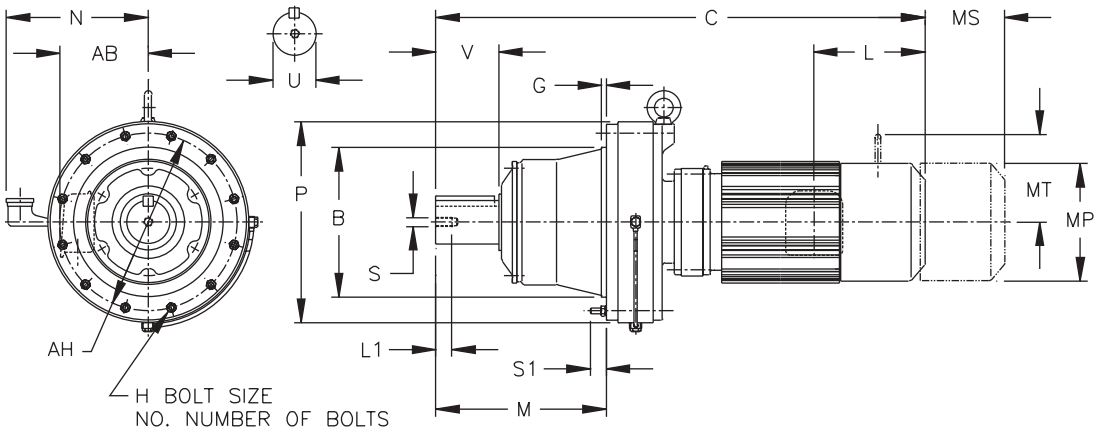

Inch (in)

Model CHFM	B	G	H	NO	M	N	O	P	Q	S1	AH	X
618□DBY	11.0230 11.0217	0.47	0.55	8	11.77	22.5	9.09	14.57	M12	1.50	12.99	10.16
619□DAY	12.5977 12.5963	0.39	0.55	12	14.37	15	11.06	16.93	M12	1.61	14.96	11.22
619□DBY	12.5977 12.5963	0.39	0.55	12	14.37	15	11.06	16.93	M12	1.61	14.96	11.22

Model CHFM	LOW SPEED SHAFT				
	U*	V	S	L1	KEY
618□DBY	3.125	4.33	1/2-13UNC	0.94	3/4 X 3/4 X 3.74
619□DAY	3.625	5.31	3/4-10UNC	1.34	7/8 X 7/8 X 4.92
619□DBY	3.625	5.31	3/4-10UNC	1.34	7/8 X 7/8 X 4.92

*** Shaft Tolerances:**

Shaft Nominal Diameter (inches)	Tolerances (inches)
2.000 (2) through 3.125 (3 1/8)	+0.0000/-0.0007
3.250 (3 1/4) through 4.625 (4 5/8)	+0.0000/-0.0009
4.750 (4 3/4) through 7.000 (7)	+0.0000/-0.0010

Model	Motor		Without Brake				Appx Wt (lb)	With Brake						Appx Wt (lb)
	HP	Pole	C	AB	L	MP		C	AB	L	MP	MS	MT	
CHFM1-618□DBY	1	4	28.86	4.49	3.82	5.83	340	30.55	5.59	5.51	5.83	3.66	4.17	346
CHFM1H-618□DBY	1.5	4	30.16	4.69	3.94	6.30	348	32.60	5.79	6.38	6.30	4.53	4.49	359
CHFM2-618□DBY	2	4	30.16	4.69	3.94	6.30	348	32.60	5.79	6.38	6.30	4.53	4.49	359
CHFM3-618□DBY	3	4	30.94	4.96	2.32	6.81	355	33.43	6.06	3.58	6.81	2.40	-	370
CHFM5-618□DBY	5	4	31.85	5.79	5.00	8.35	377	34.69	6.69	7.83	8.35	5.20	6.18	399
CHFM8-618□DBY	7.5	4	33.58	5.79	5.00	8.35	392	36.42	6.69	7.83	8.35	5.20	6.18	415
CHFM10-618□DBY	10	4	34.49	7.40	5.63	9.88	426	38.23	7.40	9.37	9.88	6.69	7.17	465
CHFM15-618□DBY	15	4	36.85	7.40	5.63	9.88	456	40.59	7.40	9.37	9.88	6.69	7.17	496
CHFM1-619□DAY	1	4	31.22	4.49	3.82	5.83	441	32.91	5.59	5.51	5.83	3.66	4.17	448
CHFM1H-619□DAY	1.5	4	32.52	4.69	3.94	6.30	450	34.96	5.79	6.38	6.30	4.53	4.49	461
CHFM2-619□DAY	2	4	32.52	4.69	3.94	6.30	450	34.96	5.79	6.38	6.30	4.53	4.49	461
CHFM3-619□DAY	3	4	33.31	4.96	2.32	6.81	459	35.79	6.06	3.58	6.81	2.40	-	474
CHFM5-619□DAY	5	4	34.21	5.79	5.00	8.35	481	37.05	6.69	7.83	8.35	5.20	6.18	503
CHFM8-619□DAY	7.5	4	35.94	5.79	5.00	8.35	496	38.78	6.69	7.83	8.35	5.20	6.18	518
CHFM5-619□DBY	5	4	34.84	5.79	5.00	8.35	496	37.68	6.69	7.83	8.35	5.20	6.18	518
CHFM8-619□DBY	7.5	4	36.57	5.79	5.00	8.35	512	39.41	6.69	7.83	8.35	5.20	6.18	534
CHFM10-619□DBY	10	4	37.48	7.40	5.63	9.88	545	41.22	7.40	9.37	9.88	6.69	7.17	584
CHFM15-619□DBY	15	4	39.84	7.40	5.63	9.88	576	43.58	7.40	9.37	9.88	6.69	7.17	615
CHFM20-619□DBY	20	4	43.39	9.13	11.61	12.76	690	46.93	9.13	15.16	12.76	8.66	-	763

Note: [1] 0 or 5 replaces □ depending on the model selected for the application. Please refer to the Gearmotor Selection Procedure and Tables in this section.

Dimensions shown are for reference only and are subject to change without notice, unless certified. Certified prints are available after receipt of an order; consult factory.

CHFM-618□DB~619□DB[1] (con't.)

Metric (mm)[2]

Model	B g6	G	H	NO	M	N	O	P	Q	S1	AH	X
618□DB	280	12	14	8	299	22.5	231	370	M12	38	330	258
619□DA	320	10	14	12	365	15	281	430	M12	41	380	285
619□DB	320	10	14	12	365	15	281	430	M12	41	380	285

Model	LOW SPEED SHAFT				
	Uh6	V	S	L1	KEY
618□DB	80	110	M12	24	22 X 14 X 100
619□DA	95	135	M20	34	25 X 14 X 125
619□DB	95	135	M20	34	25 X 14 X 125

Model	Motor		Without Brake				Appx Wt (kg)	With Brake						Appx Wt (kg)
	kW	Pole	C	AB	L	MP		C	AB	L	MP	MS	MT	
CHFM1-618□DB	0.75	4	733	114	97	148	154	776	142	140	148	93	106	157
CHFM1H-618□DB	1.1	4	766	119	100	160	158	828	147	162	160	115	114	163
CHFM2-618□DB	1.5	4	766	119	100	160	158	828	147	162	160	115	114	163
CHFM3-618□DB	2.2	4	786	126	59	173	161	849	154	91	173	61	-	168
CHFM5-618□DB	3.7	4	809	147	127	212	171	881	170	199	212	132	157	181
CHFM8-618□DB	5.5	4	853	147	127	212	178	925	170	199	212	132	157	188
CHFM10-618□DB	7.5	4	876	188	143	251	193	971	188	238	251	170	182	211
CHFM15-618□DB	11	4	936	188	143	251	207	1031	188	238	251	170	182	225
CHFM1-619□DA	0.75	4	793	114	97	148	200	836	142	140	148	93	106	203
CHFM1H-619□DA	1.1	4	826	119	100	160	204	888	147	162	160	115	114	209
CHFM2-619□DA	1.5	4	826	119	100	160	204	888	147	162	160	115	114	209
CHFM3-619□DA	2.2	4	846	126	59	173	208	909	154	91	173	61	-	215
CHFM5-619□DA	3.7	4	869	147	127	212	218	941	170	199	212	132	157	228
CHFM8-619□DA	5.5	4	913	147	127	212	225	985	170	199	212	132	157	235
CHFM5-619□DB	3.7	4	885	147	127	212	225	957	170	199	212	132	157	235
CHFM8-619□DB	5.5	4	929	147	127	212	232	1001	170	199	212	132	157	242
CHFM10-619□DB	7.5	4	952	188	143	251	247	1047	188	238	251	170	182	265
CHFM15-619□DB	11	4	1012	188	143	251	261	1107	188	238	251	170	182	279
CHFM20-619□DB	15	4	1102	232	295	324	313	1192	232	385	324	220	-	346

Notes: [1] 0 or 5 replaces □ depending on the model selected for the application. Please refer to the Gearmotor Selection Procedure and Tables in this section.
[2] The shaft dimensions shown above are hard metric sizes with metric keys. Units are available with shafting made to either DIN/ISO or JIS tolerances. Please consult factory for availability.

INTEGRAL F-FLANGE MOUNT
DOUBLE REDUCTION

CHFM-6205DA~6225DB

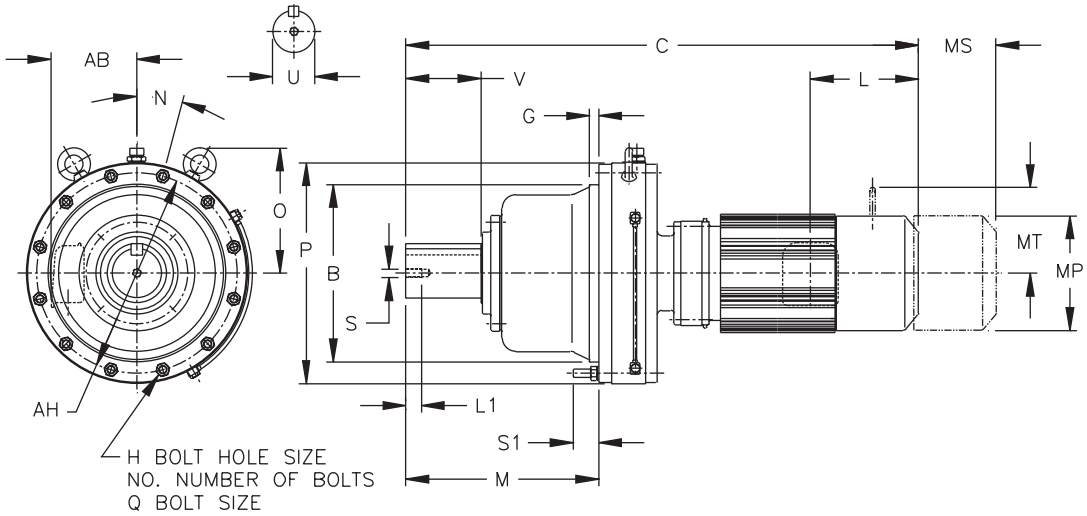

Inch (in)

Model CHFM	B	G	H	NO	M	N	O	P	Q	S1	AH
6205DAY	14.1725 14.1711	0.79	0.71	12	16.14	15	11.14	17.64	M16	2.20	15.94
6205DBY	14.1725 14.1711	0.79	0.71	12	16.14	15	11.14	17.64	M16	2.20	15.94
6215DAY	15.3536 15.3522	0.79	0.81	12	16.65	15	12.28	19.09	M18	2.20	17.32
6215DBY	15.3536 15.3522	0.79	0.81	12	16.65	15	12.28	19.09	M18	2.20	17.32
6225DAY	16.5346 16.5331	0.79	0.87	12	17.87	15	13.11	20.71	M20	2.52	18.70
6225DBY	16.5346 16.5331	0.79	0.87	12	17.87	15	13.11	20.71	M20	2.52	18.70

Model CHFM	LOW SPEED SHAFT				
	U*	V	S	L1	KEY
6205DAY	3.875	6.50	3/4-10UNC	1.34	1 X 1 X 6.50
6205DBY	3.875	6.50	3/4-10UNC	1.34	1 X 1 X 6.50
6215DAY	4.250	6.50	3/4-10UNC	1.34	1 X 1 X 6.50
6215DBY	4.250	6.50	3/4-10UNC	1.34	1 X 1 X 6.50
6225DAY	4.625	6.50	3/4-10UNC	1.34	1-1/4 X 7/8 X 6.50
6225DBY	4.625	6.50	3/4-10UNC	1.34	1-1/4 X 7/8 X 6.50

*** Shaft Tolerances:**

Shaft Nominal Diameter (inches)	Tolerances (inches)
3.250 (3 1/4) through 4.625 (4 5/8)	+0.0000/-0.0009
4.750 (4 3/4) through 7.000 (7)	+0.0000/-0.0010

Dimensions shown are for reference only and are subject to change without notice, unless certified.
Certified prints are available after receipt of an order; consult factory.

CHFM-6205DA~6225DB (con't.)

Inch (in)

Model	Motor		Without Brake				Appx Wt (lb)	With Brake						Appx Wt (lb)
	HP	Pole	C	AB	L	MP		C	AB	L	MP	MS	MT	
CHFM1-6205DAY	1	4	32.83	4.49	3.82	5.83	494	34.53	5.59	5.51	5.83	3.66	4.17	501
CHFM2-6205DAY	2	4	34.13	4.69	3.94	6.30	503	36.57	5.79	6.38	6.30	4.53	4.49	514
CHFM3-6205DAY	3	4	34.92	4.96	2.32	6.81	512	37.36	6.06	3.58	6.81	2.40	-	527
CHFM5-6205DAY	5	4	35.83	5.79	5.00	8.35	534	38.66	6.69	7.83	8.35	5.20	6.18	556
CHFM8-6205DAY	7.5	4	37.56	5.79	5.00	8.35	549	40.39	6.69	7.83	8.35	5.20	6.18	571
CHFM3-6205DB	3	4	35.98	4.96	2.32	6.81	538	38.46	6.06	3.58	6.81	2.40	-	553
CHFM5-6205DB	5	4	36.89	5.79	5.00	8.35	560	39.72	6.69	7.83	8.35	5.20	6.18	582
CHFM8-6205DB	7.5	4	38.62	5.79	5.00	8.35	576	41.46	6.69	7.83	8.35	5.20	6.18	598
CHFM10-6205DB	10	4	39.53	7.40	5.63	9.88	609	43.27	7.40	9.37	9.88	6.69	7.17	648
CHFM15-6205DB	15	4	41.89	7.40	5.63	9.88	637	45.63	7.40	9.37	9.88	6.69	7.17	677
CHFM20-6205DB	20	4	45.43	9.13	11.61	12.76	752	48.58	9.13	15.16	12.76	8.66	-	822
CHFM2-6215DAY	2	4	36.22	4.69	3.94	6.30	706	38.66	5.79	6.38	6.30	4.53	4.49	717
CHFM3-6215DAY	3	4	37.01	4.96	2.32	6.81	712	39.49	6.06	3.58	6.81	2.40	-	728
CHFM5-6215DAY	5	4	37.91	5.79	5.00	8.35	734	40.75	6.69	7.83	8.35	5.20	6.18	756
CHFM8-6215DAY	7.5	4	39.65	5.79	5.00	8.35	750	42.48	6.69	7.83	8.35	5.20	6.18	772
CHFM10-6215DAY	10	4	40.55	7.40	5.63	9.88	783	44.29	7.40	9.37	9.88	6.69	7.17	822
CHFM15-6215DAY	15	4	42.91	7.40	5.63	9.88	811	46.65	7.40	9.37	9.88	6.69	7.17	851
CHFM20-6215DAY	20	4	46.46	9.13	11.61	12.76	926	50.00	9.13	15.16	12.76	8.66	-	999
CHFM10-6215DBY	10	4	41.73	7.40	5.63	9.88	827	45.47	7.40	9.37	9.88	6.69	7.17	864
CHFM15-6215DBY	15	4	44.09	7.40	5.63	9.88	858	47.83	7.40	9.37	9.88	6.69	7.17	895
CHFM20-6215DBY	20	4	47.44	9.13	11.61	12.76	975	50.98	9.13	15.16	12.76	8.66	-	1047
CHFM25-6215DBY	25	4	51.18	11.69	13.39	15.51	1131	59.45	11.69	21.65	15.51	14.45	-	1244
CHFM30-6215DBY	30	4	51.18	11.69	13.39	15.51	1131	59.45	11.69	21.65	15.51	14.45	-	1244
CHFM2-6225DAY	2	4	37.87	4.69	3.94	6.30	831	40.31	5.79	6.38	6.30	4.53	4.49	842
CHFM3-6225DAY	3	4	38.66	4.96	2.32	6.81	838	41.14	6.06	3.58	6.81	2.40	-	853
CHFM5-6225DAY	5	4	39.57	5.79	5.00	8.35	860	42.40	6.69	7.83	8.35	5.20	6.18	882
CHFM8-6225DAY	7.5	4	41.30	5.79	5.00	8.35	875	44.13	6.69	7.83	8.35	5.20	6.18	897
CHFM10-6225DAY	10	4	42.20	7.40	5.63	9.88	908	45.94	7.40	9.37	9.88	6.69	7.17	948
CHFM15-6225DAY	15	4	44.57	7.40	5.63	9.88	939	48.31	7.40	9.37	9.88	6.69	7.17	979
CHFM20-6225DAY	20	4	48.11	9.13	11.61	12.76	1054	51.65	9.13	15.16	12.76	8.66	-	1127
CHFM10-6225DBY	10	4	44.29	7.40	5.63	9.88	1008	48.03	7.40	9.37	9.88	6.69	7.17	1047
CHFM15-6225DBY	15	4	46.65	7.40	5.63	9.88	1039	50.39	7.40	9.37	9.88	6.69	7.17	1078
CHFM20-6225DBY	20	4	49.80	9.13	11.61	12.76	1158	53.35	9.13	15.16	12.76	8.66	-	1230
CHFM25-6225DBY	25	4	53.54	11.69	13.39	15.51	1308	61.81	11.69	21.65	15.51	14.45	-	1420
CHFM30-6225DBY	30	4	53.54	11.69	13.39	15.51	1308	61.81	11.69	21.65	15.51	14.45	-	1420
CHFM40-6225DBY	40	4	53.54	11.69	13.39	15.51	1345	61.81	11.69	21.65	15.51	14.57	-	1458

Dimensions shown are for reference only and are subject to change without notice, unless certified.
Certified prints are available after receipt of an order; consult factory.

INTEGRAL F-FLANGE MOUNT
DOUBLE REDUCTION

CHFM-6205DA~6225DB

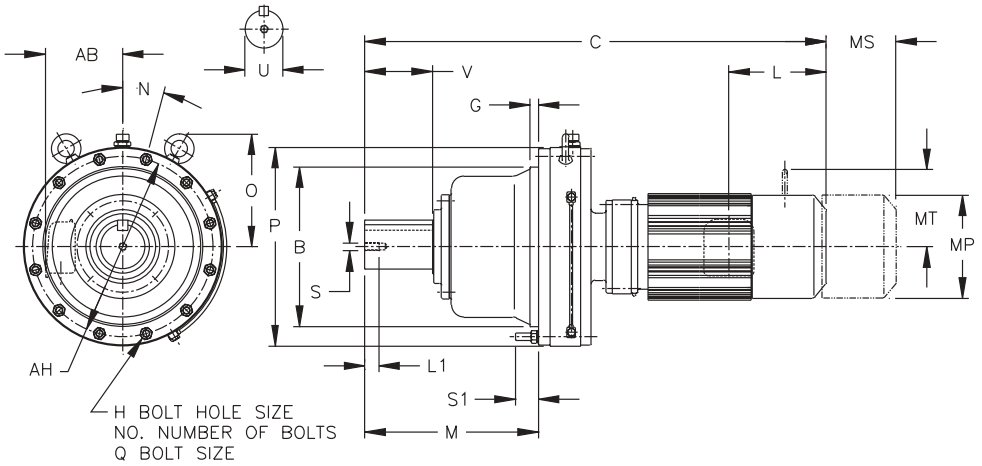

Metric (mm)[1]

Model CHFM	B g6	G	H	NO	M	N	O	P	Q	S1	AH
6205DA	360	20	18	12	410	15	283	448	M16	56	405
6205DB	360	20	18	12	410	15	283	448	M16	56	405
6215DA	390	20	20.5	12	423	15	312	485	M18	56	440
6215DB	390	20	20.5	12	423	15	312	485	M18	56	440
6225DA	420	20	22	12	454	15	333	526	M20	64	475
6225DB	420	20	22	12	454	15	333	526	M20	64	475

Model CHFM	LOW SPEED SHAFT				
	U h6	V	S	L1	KEY
6205DA	100	165	M20	34	28 X 16 X 165
6205DB	100	165	M20	34	28 X 16 X 165
6215DA	110	165	M20	34	28 X 16 X 165
6215DB	110	165	M20	34	28 X 16 X 165
6225DA	120	165	M20	34	32 X 18 X 165
6225DB	120	165	M20	34	32 X 18 X 165

Model	Motor		Without Brake				Appx Wt (kg)	With Brake						Appx Wt (kg)
	kW	Pole	C	AB	L	MP		C	AB	L	MP	MS	MT	
CHFM1-6205DA	0.75	4	834	114	97	148	224	877	142	140	148	93	106	227
CHFM2-6205DA	1.5	4	867	119	100	160	228	929	147	162	160	115	114	233
CHFM3-6205DA	2.2	4	887	126	59	173	232	949	154	91	173	61	-	239
CHFM5-6205DA	3.7	4	910	147	127	212	242	982	170	199	212	132	157	252
CHFM8-6205DA	5.5	4	954	147	127	212	249	1026	170	199	212	132	157	259
CHFM3-6205DB	2.2	4	914	126	59	173	244	977	154	91	173	61	-	251
CHFM5-6205DB	3.7	4	937	147	127	212	254	1009	170	199	212	132	157	264
CHFM8-6205DB	5.5	4	981	147	127	212	261	1053	170	199	212	132	157	271
CHFM10-6205DB	7.5	4	1004	188	143	251	276	1099	188	238	251	170	182	294
CHFM15-6205DB	11	4	1064	188	143	251	289	1159	188	238	251	170	182	307
CHFM20-6205DB	15	4	1154	232	295	324	341	1234	232	385	324	220	-	373

Note: [1] The shaft dimensions shown above are hard metric sizes with metric keys. Units are available with shafting made to either DIN/ISO or JIS tolerances. Please consult factory for availability.

Dimensions shown are for reference only and are subject to change without notice, unless certified.
Certified prints are available after receipt of an order; consult factory.

CHFM-6205DA~6225DB (con't)

Metric (mm)

Model	Motor		Without Brake				Appx Wt (kg)	With Brake						Appx Wt (kg)
	kW	Pole	C	AB	L	MP		C	AB	L	MP	MS	MT	
CHFM2-6215DA	1.5	4	920	119	100	160	320	982	147	162	160	115	114	325
CHFM3-6215DA	2.2	4	940	126	59	173	323	1003	154	91	173	61	-	330
CHFM5-6215DA	3.7	4	963	147	127	212	333	1035	170	199	212	132	157	343
CHFM8-6215DA	5.5	4	1007	147	127	212	340	1079	170	199	212	132	157	350
CHFM10-6215DA	7.5	4	1030	188	143	251	355	1125	188	238	251	170	182	373
CHFM15-6215DA	11	4	1090	188	143	251	368	1185	188	238	251	170	182	386
CHFM20-6215DA	15	4	1180	232	295	324	420	1270	232	385	324	220	-	453
CHFM10-6215DB	7.5	4	1060	188	143	251	375	1155	188	238	251	170	182	392
CHFM15-6215DB	11	4	1120	188	143	251	389	1215	188	238	251	170	182	406
CHFM20-6215DB	15	4	1205	232	295	324	442	1295	232	385	324	220	-	475
CHFM25-6215DB	18.5	4	1300	297	340	394	513	1510	297	550	394	367	-	564
CHFM30-6215DB	22	4	1300	297	340	394	513	1510	297	550	394	367	-	564
CHFM2-6225DA	1.5	4	962	119	100	160	377	1024	147	162	160	115	114	382
CHFM3-6225DA	2.2	4	982	126	59	173	380	1045	154	91	173	61	-	387
CHFM5-6225DA	3.7	4	1005	147	127	212	390	1077	170	199	212	132	157	400
CHFM8-6225DA	5.5	4	1049	147	127	212	397	1121	170	199	212	132	157	407
CHFM10-6225DA	7.5	4	1072	188	143	251	412	1167	188	238	251	170	182	430
CHFM15-6225DA	11	4	1132	188	143	251	426	1227	188	238	251	170	182	444
CHFM20-6225DA	15	4	1222	232	295	324	478	1312	232	385	324	220	-	511
CHFM10-6225DB	7.5	4	1125	188	143	251	457	1220	188	238	251	170	182	475
CHFM15-6225DB	11	4	1185	188	143	251	471	1280	188	238	251	170	182	489
CHFM20-6225DB	15	4	1265	232	295	324	525	1355	232	385	324	220	-	558
CHFM25-6225DB	18.5	4	1360	297	340	394	593	1570	297	550	394	367	-	644
CHFM30-6225DB	22	4	1360	297	340	394	593	1570	297	550	394	367	-	644
CHFM40-6225DB	30	4	1360	297	340	394	610	1570	297	550	394	370	-	661

Dimensions shown are for reference only and are subject to change without notice, unless certified.
Certified prints are available after receipt of an order; consult factory.

INTEGRAL F-FLANGE MOUNT
DOUBLE REDUCTION

CHFM-6235DA~6265DA

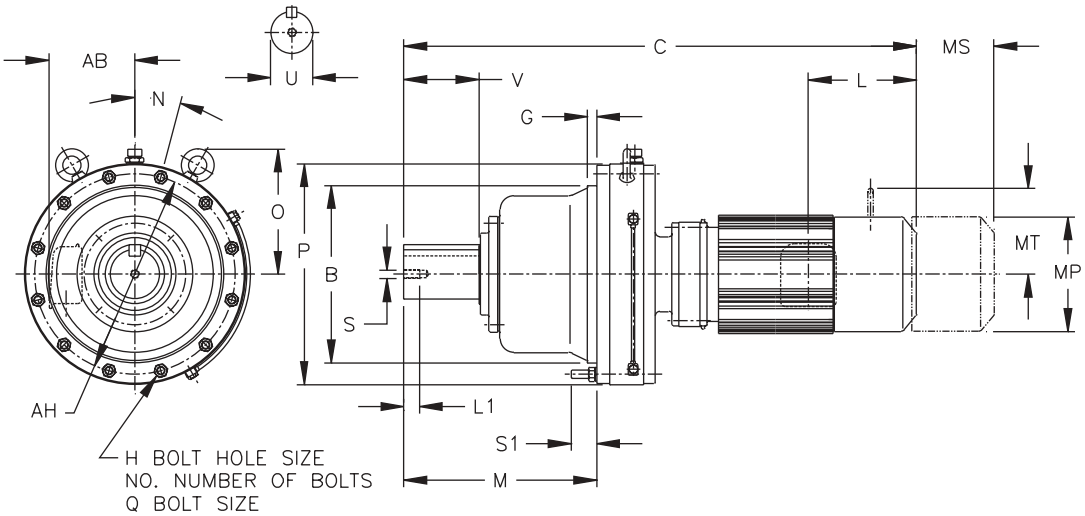

Inch (in)

Model CHFM	B	G	H	NO	M	N	O	P	Q	S1	AH
6235DAY	17.9126 17.9110	0.79	0.87	12	19.88	15	13.82	22.17	M20	2.56	20.08
6235DBY	17.9126 17.9110	0.79	0.87	12	19.88	15	13.82	22.13	M20	2.56	20.08
6245DAY	19.6843 19.6827	0.98	1.06	12	20.83	15	15.55	24.17	M24	2.56	22.05
6245DBY	19.6843 19.6827	0.98	1.06	12	20.83	15	15.55	24.17	M24	2.56	22.05
6255DAY	21.2590 21.2572	1.18	1.06	12	24.25	15	15.20	26.38	M24	3.58	24.02
6255DBY	21.2590 21.2572	1.18	1.06	12	24.25	15	15.20	26.38	M24	3.58	24.02
6265DAY	22.4401 22.4383	1.57	1.34	12	28.03	15	17.83	28.98	M30	3.35	25.98

Model CHFM	LOW SPEED SHAFT				
	U*	V	S	L1	KEY
6235DAY	5.000	7.87	1-8UNC	1.61	1-1/4 X 7/8 X 7.87
6235DBY	5.000	7.87	1-8UNC	1.61	1-1/4 X 7/8 X 7.87
6245DAY	5.500	7.87	1-8UNC	1.61	1-1/4 X 7/8 X 7.87
6245DBY	5.500	7.87	1-8UNC	1.61	1-1/4 X 7/8 X 7.87
6255DAY	6.250	9.45	1-1/4-7UNC	1.93	1-1/2 X 1 X 9.45
6255DBY	6.250	9.45	1-1/4-7UNC	1.93	1-1/2 X 1 X 9.45
6265DAY	6.625	11.81	1-1/4-7UNC	1.93	1-3/4 X 1-1/4 X 11.81

*** Shaft Tolerances:**

Shaft Nominal Diameter (inches)	Tolerances (inches)
3.250 (3 1/4) through 4.625 (4 5/8)	+0.0000/-0.0009
4.750 (4 3/4) through 7.000 (7)	+0.0000/-0.0010

Dimensions shown are for reference only and are subject to change without notice, unless certified.
Certified prints are available after receipt of an order; consult factory.

CHFM-6235DA~6265DA (con't.)

Inch (in)

Model	Motor		Without Brake				Appx Wt (lb)	With Brake						Appx Wt (lb)
	HP	Pole	C	AB	L	MP		C	AB	L	MP	MS	MT	
CHFM3-6235DAY	3	4	42.05	4.96	2.32	6.81	1067	44.53	6.06	3.58	6.81	2.40	-	1080
CHFM5-6235DAY	5	4	42.95	5.79	5.00	8.35	1087	45.79	6.69	7.83	8.35	5.20	6.18	1109
CHFM8-6235DAY	7.5	4	44.69	5.79	5.00	8.35	1103	47.52	6.69	7.83	8.35	5.20	6.18	1125
CHFM10-6235DAY	10	4	45.79	7.40	5.63	9.88	1138	49.53	7.40	9.37	9.88	6.69	7.17	1175
CHFM15-6235DAY	15	4	48.15	7.40	5.63	9.88	1169	51.89	7.40	9.37	9.88	6.69	7.17	1206
CHFM20-6235DAY	20	4	51.50	9.13	11.61	12.76	1286	55.04	9.13	15.16	12.76	8.66	-	1358
CHFM25-6235DAY	25	4	55.24	11.69	13.39	15.51	1446	63.50	11.69	21.65	15.51	14.45	-	1559
CHFM30-6235DAY	30	4	55.24	11.69	13.39	15.51	1446	63.50	11.69	21.65	15.51	14.45	-	1559
CHFM40-6235DBY	40	4	56.10	11.69	13.39	15.51	1555	64.37	11.69	21.65	15.51	14.57	-	1649
CHFM50-6235DBY	50	4	60.63	11.69	16.93	15.51	1638	69.09	11.69	25.39	15.51	17.52	-	1852
CHFM3-6245DAY	3	4	43.54	4.96	2.32	6.81	1305	46.02	6.06	3.58	6.81	2.40	-	1319
CHFM5-6245DAY	5	4	44.45	5.79	5.00	8.35	1325	47.28	6.69	7.83	8.35	5.20	6.18	1347
CHFM8-6245DAY	7.5	4	46.18	5.79	5.00	8.35	1341	49.02	6.69	7.83	8.35	5.20	6.18	1363
CHFM10-6245DAY	10	4	47.28	7.40	5.63	9.88	1376	51.02	7.40	9.37	9.88	6.69	7.17	1413
CHFM15-6245DAY	15	4	49.65	7.40	5.63	9.88	1407	53.39	7.40	9.37	9.88	6.69	7.17	1444
CHFM20-6245DAY	20	4	52.99	9.13	11.61	12.76	1524	56.54	9.13	15.16	12.76	8.66	-	1596
CHFM25-6245DAY	25	4	56.73	11.69	13.39	15.51	1671	65.00	11.69	21.65	15.51	14.45	-	1784
CHFM30-6245DAY	30	4	56.73	11.69	13.39	15.51	1671	65.00	11.69	21.65	15.51	14.45	-	1784
CHFM20-6245DBY	20	4	53.82	9.13	11.61	12.76	1592	57.36	9.13	15.16	12.76	8.66	-	1654
CHFM30-6245DBY	30	4	57.56	11.69	13.39	15.51	1729	65.83	11.69	21.65	15.51	14.45	-	1841
CHFM40-6245DBY	40	4	57.56	11.69	13.39	15.51	1766	65.83	11.69	21.65	15.51	14.57	-	1861
CHFM50-6245DBY	50	4	62.09	11.69	16.93	15.51	1848	70.55	11.69	25.39	15.51	17.52	-	2062
CHFM5-6255DAY	5	4	50.55	5.79	5.00	8.35	1912	53.39	6.69	7.83	8.35	5.20	6.18	1934
CHFM8-6255DAY	7.5	4	52.28	5.79	5.00	8.35	1934	55.12	6.69	7.83	8.35	5.20	6.18	1956
CHFM10-6255DAY	10	4	52.99	7.40	5.63	9.88	1967	56.73	7.40	9.37	9.88	6.69	7.17	2000
CHFM15-6255DAY	15	4	55.35	7.40	5.63	9.88	2000	59.09	7.40	9.37	9.88	6.69	7.17	2033
CHFM20-6255DAY	20	4	58.50	9.13	11.61	12.76	2110	62.05	9.13	15.16	12.76	8.66	-	2187
CHFM25-6255DAY	25	4	62.24	11.69	13.39	15.51	2265	70.51	11.69	21.65	15.51	14.45	-	2377
CHFM30-6255DAY	30	4	62.24	11.69	13.39	15.51	2265	70.51	11.69	21.65	15.51	14.45	-	2377
CHFM40-6255DAY	40	4	62.24	11.69	13.39	15.51	2309	70.51	11.69	21.65	15.51	14.57	-	2403
CHFM25-6255DBY	25	4	63.11	11.69	13.39	15.51	2430	71.38	11.69	21.65	15.51	14.45	-	2542
CHFM30-6255DBY	30	4	63.11	11.69	13.39	15.51	2430	71.38	11.69	21.65	15.51	14.45	-	2542
CHFM40-6255DBY	40	4	63.11	11.69	13.39	15.51	2463	71.38	11.69	21.65	15.51	14.57	-	2558
CHFM50-6255DBY	50	4	67.64	11.69	16.93	15.51	2545	75.91	11.69	25.39	15.51	17.52	-	2758
CHFM60-6255DBY	60	4	67.64	11.69	16.93	15.51	2545	75.91	11.69	25.39	15.51	17.52	-	2758
CHFM8-6265DAY	7.5	4	58.27	5.79	5.00	8.35	2635	61.10	6.69	7.83	8.35	5.20	6.18	2657
CHFM10-6265DAY	10	4	58.78	7.40	5.63	9.88	2668	62.52	7.40	9.37	9.88	6.69	7.17	2712
CHFM15-6265DAY	15	4	61.14	7.40	5.63	9.88	2701	64.88	7.40	9.37	9.88	6.69	7.17	2734
CHFM20-6265DAY	20	4	63.70	9.13	11.61	12.76	2811	67.24	9.13	15.16	12.76	8.66	-	2889
CHFM25-6265DAY	25	4	67.44	11.69	13.39	15.51	2977	75.71	11.69	21.65	15.51	14.45	-	3076
CHFM30-6265DAY	30	4	67.44	11.69	13.39	15.51	2977	75.71	11.69	21.65	15.51	14.45	-	3076
CHFM40-6265DAY	40	4	67.44	11.69	13.39	15.51	3010	75.71	11.69	21.65	15.51	14.57	-	3105
CHFM50-6265DAY	50	4	71.97	11.69	16.93	15.51	3087	80.43	11.69	25.39	15.51	17.52	-	3301
CHFM60-6265DAY	60	4	71.97	11.69	16.93	15.51	3087	80.43	11.69	25.39	15.51	17.52	-	3301

Dimensions shown are for reference only and are subject to change without notice, unless certified.
Certified prints are available after receipt of an order; consult factory.

INTEGRAL F-FLANGE MOUNT
DOUBLE REDUCTION

CHFM-6235DA~6265DA

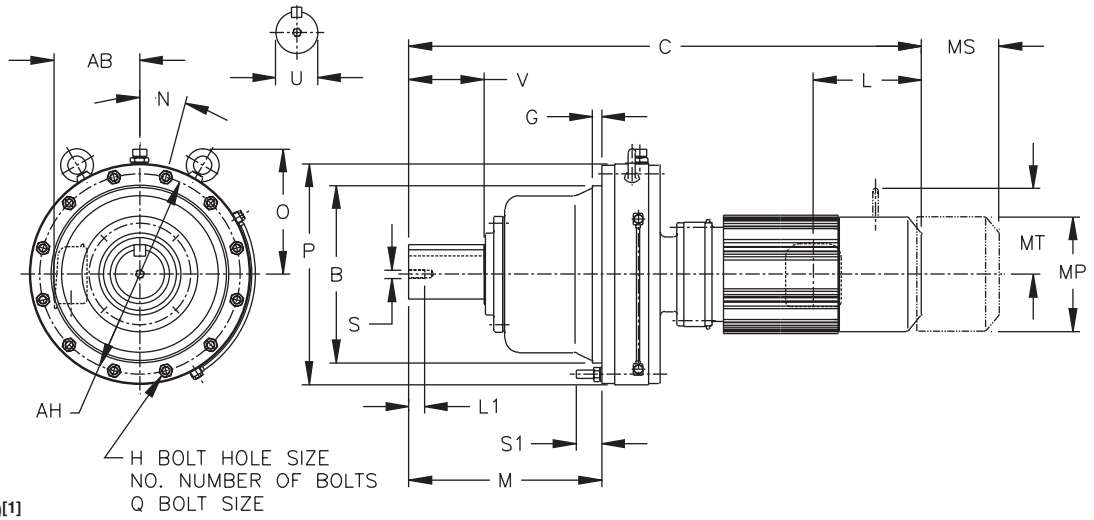

Metric (mm)[1]

Model CHFM	B g6	G	H	NO	M	N	O	P	Q	S1	AH
6235DA	455	20	22	12	505	15	351	562	M20	65	510
6235DB	455	20	22	12	505	15	351	562	M20	65	510
6245DA	500	25	27	12	529	15	395	614	M24	65	560
6245DB	500	25	27	12	529	15	395	614	M24	65	560
6255DA	540	30	27	12	616	15	386	670	M24	91	610
6255DB	540	30	27	12	616	15	386	670	M24	91	610
6265DA	570	40	34	12	712	15	453	736	M30	85	660

Model CHFM	LOW SPEED SHAFT				
	U h6	V	S	L1	KEY
6235DA	130	200	M24	41	32 X 18 X 200
6235DB	130	200	M24	41	32 X 18 X 200
6245DA	140	200	M24	41	36 X 20 X 200
6245DB	140	200	M24	41	36 X 20 X 200
6255DA	160	240	M30	49	40 X 22 X 240
6255DB	160	240	M30	49	40 X 22 X 240
6265DA	170	300	M30	49	40 X 22 X 300

Model	Motor		Without Brake				Appx Wt (kg)	With Brake						Appx Wt (kg)
	kW	Pole	C	AB	L	MP		C	AB	L	MP	MS	MT	
CHFM3-6235DA	2.2	4	1068	126	59	173	484	1131	154	91	173	61	-	490
CHFM5-6235DA	3.7	4	1091	147	127	212	493	1163	170	199	212	132	157	503
CHFM8-6235DA	5.5	4	1135	147	127	212	500	1207	170	199	212	132	157	510
CHFM10-6235DA	7.5	4	1163	188	143	251	516	1258	188	238	251	170	182	533
CHFM15-6235DA	11	4	1223	188	143	251	530	1318	188	238	251	170	182	547
CHFM20-6235DA	15	4	1308	232	295	324	583	1398	232	385	324	220	-	616
CHFM25-6235DA	18.5	4	1403	297	340	394	656	1613	297	550	394	367	-	707
CHFM30-6235DA	22	4	1403	297	340	394	656	1613	297	550	394	367	-	707
CHFM40-6235DB	30	4	1425	297	340	394	705	1635	297	550	394	370	-	748
CHFM50-6235DB	37	4	1540	297	430	394	743	1755	297	645	394	445	-	840

Note: [1] The shaft dimensions shown above are hard metric sizes with metric keys. Units are available with shafting made to either DIN/ISO or JIS tolerances. Please consult factory for availability.

Dimensions shown are for reference only and are subject to change without notice, unless certified.
Certified prints are available after receipt of an order; consult factory.

CHFM-6235DA~6265DA (con't.)

Metric (mm)

Model	Motor		Without Brake				Appx Wt (kg)	With Brake						Appx Wt (kg)
	kW	Pole	C	AB	L	MP		C	AB	L	MP	MS	MT	
CHFM3-6245DA	2.2	4	1106	126	59	173	592	1169	154	91	173	61	-	598
CHFM5-6245DA	3.7	4	1129	147	127	212	601	1201	170	199	212	132	157	611
CHFM8-6245DA	5.5	4	1173	147	127	212	608	1245	170	199	212	132	157	618
CHFM10-6245DA	7.5	4	1201	188	143	251	624	1296	188	238	251	170	182	641
CHFM15-6245DA	11	4	1261	188	143	251	638	1356	188	238	251	170	182	655
CHFM20-6245DA	15	4	1346	232	295	324	691	1436	232	385	324	220	-	724
CHFM25-6245DA	18.5	4	1441	297	340	394	758	1651	297	550	394	367	-	809
CHFM30-6245DA	22	4	1441	297	340	394	758	1651	297	550	394	367	-	809
CHFM20-6245DB	15	4	1367	232	295	324	722	1457	232	385	324	220	-	750
CHFM30-6245DB	22	4	1462	297	340	394	784	1672	297	550	394	367	-	835
CHFM40-6245DB	30	4	1462	297	340	394	801	1672	297	550	394	370	-	844
CHFM50-6245DB	37	4	1577	297	430	394	838	1792	297	645	394	445	-	935
CHFM5-6255DA	3.7	4	1284	147	127	212	867	1356	170	199	212	132	157	877
CHFM8-6255DA	5.5	4	1328	147	127	212	877	1400	170	199	212	132	157	887
CHFM10-6255DA	7.5	4	1346	188	143	251	892	1441	188	238	251	170	182	907
CHFM15-6255DA	11	4	1406	188	143	251	907	1501	188	238	251	170	182	922
CHFM20-6255DA	15	4	1486	232	295	324	957	1576	232	385	324	220	-	992
CHFM25-6255DA	18.5	4	1581	297	340	394	1027	1791	297	550	394	367	-	1078
CHFM30-6255DA	22	4	1581	297	340	394	1027	1791	297	550	394	367	-	1078
CHFM40-6255DA	30	4	1581	297	340	394	1047	1791	297	550	394	370	-	1090
CHFM25-6255DB	18.5	4	1603	297	340	394	1102	1813	297	550	394	367	-	1153
CHFM30-6255DB	22	4	1603	297	340	394	1102	1813	297	550	394	367	-	1153
CHFM40-6255DB	30	4	1603	297	340	394	1117	1813	297	550	394	370	-	1160
CHFM50-6255DB	37	4	1718	297	430	394	1154	1928	297	645	394	445	-	1251
CHFM60-6255DB	45	4	1718	297	430	394	1154	1928	297	645	394	445	-	1251
CHFM8-6265DA	5.5	4	1480	147	127	212	1195	1552	170	199	212	132	157	1205
CHFM10-6265DA	7.5	4	1493	188	143	251	1210	1588	188	238	251	170	182	1230
CHFM15-6265DA	11	4	1553	188	143	251	1225	1648	188	238	251	170	182	1240
CHFM20-6265DA	15	4	1618	232	295	324	1275	1708	232	385	324	220	-	1310
CHFM25-6265DA	18.5	4	1713	297	340	394	1350	1923	297	550	394	367	-	1395
CHFM30-6265DA	22	4	1713	297	340	394	1350	1923	297	550	394	367	-	1395
CHFM40-6265DA	30	4	1713	297	340	394	1365	1923	297	550	394	370	-	1408
CHFM50-6265DA	37	4	1828	297	430	394	1400	2043	297	645	394	445	-	1497
CHFM60-6265DA	45	4	1828	297	430	394	1400	2043	297	645	394	445	-	1497

Note: [1] The shaft dimensions shown above are hard metric sizes with metric keys. Units are available with shafting made to either DIN/ISO or JIS tolerances. Please consult factory for availability.

INTEGRAL VERTICAL F-FLANGE MOUNT
DOUBLE REDUCTION

CVFM-613□DC~619□DB[1]

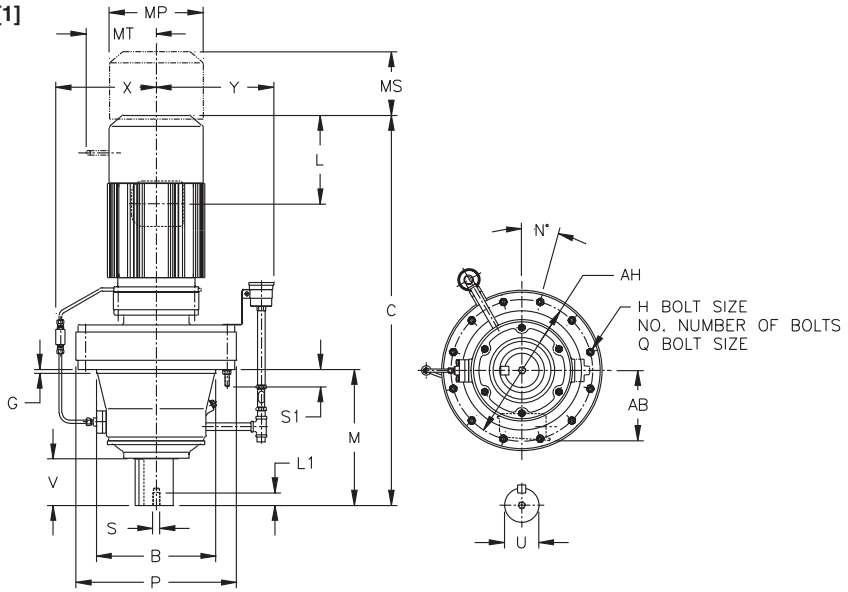

Inch (in)

Model CVFM	B	C	G	H	NO	M	N	P	Q	S1	AH	X	Y
613□DCY	6.4955 6.4945	14.53	0.63	0.43	6	7.01	60	9.06	M10	1.22	8.07	-	-
614□DBY	6.4955 6.4945	15.08	0.63	0.43	6	7.80	60	9.06	M10	1.22	8.07	-	-
616□DCY	7.8734 7.8723	18.19	0.39	0.55	6	8.74	30	11.81	M12	1.38	10.63	7.72	9.06
617□DCY	9.8419 9.8408	20.04	0.47	0.55	8	10.31	22.50	13.39	M12	1.61	11.81	8.58	10.24
618□DBY	11.0230 11.0217	22.72	0.47	0.55	8	11.77	22.50	14.57	M12	1.50	12.99	9.17	10.24
619□DAY	12.5977 12.5963	24.76	0.39	0.55	12	14.37	15	16.93	M12	1.61	14.96	10.04	10.24
619□DBY	12.5977 12.5963	25.71	0.39	0.55	12	14.37	15	16.93	M12	1.61	14.96	10.04	10.24

Model CVFM	LOW SPEED SHAFT				
	U*	V	S	L1	KEY
613□DCY	1.875	2.40	3/8-16UNC	0.71	1/2 X 1/2 X 2.16
614□DBY	1.875	3.19	3/8-16UNC	0.71	1/2 X 1/2 X 2.95
616□DCY	2.250	3.15	3/8-16UNC	0.71	1/2 X 1/2 X 2.95
617□DCY	2.750	3.31	1/2-13UNC	0.94	5/8 X 5/8 X 3.15
618□DBY	3.125	3.94	1/2-13UNC	0.94	3/4 X 3/4 X 3.74
619□DAY	3.625	4.92	3/4-10UNC	1.34	7/8 X 7/8 X 4.92
619□DBY	3.625	4.92	3/4-10UNC	1.34	7/8 X 7/8 X 4.92

*** Shaft Tolerances:**

Shaft Nominal Diameter (inches)	Tolerances (inches)
1.25 (1 1/4) through 1.875 (1 7/8)	+0.0000/-0.0006
2.000 (2) through 3.125 (3 1/8)	+0.0000/-0.0007
3.250 (3 1/4) through 4.625 (4 5/8)	+0.0000/-0.0009

Model	Motor		Without Brake				Appx Wt (lb)	With Brake						Appx Wt (lb)
	HP	Pole	C	AB	L	MP		C	AB	L	MP	MS	MT	
CVFM02-613□DCY	1/4	4	19.41	3.35	2.32	4.88	95	20.67	3.50	3.58	4.88	2.40	-	99
CVFM03-613□DCY	1/3	4	19.41	3.35	2.32	4.88	95	20.67	3.50	3.58	4.88	2.40	-	99
CVFM05-613□DCY	1/2	4	20.20	3.35	2.32	4.88	97	21.46	3.50	3.58	4.88	2.40	-	101
CVFM08-613□DCY	3/4	4	21.81	4.49	3.82	5.83	106	23.50	5.59	5.51	5.83	3.66	4.17	112
CVFM1-613□DCY	1	4	21.81	4.49	3.82	5.83	106	23.50	5.59	5.51	5.83	3.66	4.17	112
CVFM1H-613□DCY	1.5	4	23.11	4.69	3.94	6.30	115	25.55	5.79	6.38	6.30	4.53	4.49	126
CVFM2-613□DCY	2	4	23.11	4.69	3.94	6.30	115	25.55	5.79	6.38	6.30	4.53	4.49	126
CVFM3-613□DCY	3	4	23.90	4.96	4.13	6.81	123	26.38	6.06	6.61	6.81	4.76	4.88	137

Note: [1] 0 or 5 replaces □ depending on the model selected for the application. Please refer to the Gearmotor Selection Procedure and Tables in this section.

Dimensions shown are for reference only and are subject to change without notice, unless certified.
Certified prints are available after receipt of an order; consult factory.

CVFM-613□DC~619□DB[1] (con't.)

Inch (in)

Model	Motor		Without Brake				Appx Wt (lb)	With Brake						Appx Wt (lb)
	HP	Pole	C	AB	L	MP		C	AB	L	MP	MS	MT	
CVFM01-614□DBY	1/8	4	17.99	3.35	1.38	4.69	88	19.37	3.50	2.76	4.88	1.93	-	93
CVFM02-614□DBY	1/4	4	19.65	3.35	2.32	4.88	90	20.91	3.50	3.58	4.88	2.40	-	95
CVFM03-614□DBY	1/3	4	19.65	3.35	2.32	4.88	90	20.91	3.50	3.58	4.88	2.40	-	95
CVFM05-614□DBY	1/2	4	20.43	3.35	2.32	4.88	93	21.69	3.50	3.58	4.88	2.40	-	101
CVFM08-614□DBY	3/4	4	22.05	4.49	3.82	5.83	101	23.74	5.59	5.51	5.83	3.66	4.17	108
CVFM1-614□DBY	1	4	22.05	4.49	3.82	5.83	101	23.74	5.59	5.51	5.83	3.66	4.17	108
CVFM1H-614□DBY	1.5	4	23.35	4.69	3.94	6.30	110	25.79	5.79	6.38	6.30	4.53	4.49	117
CVFM2-614□DBY	2	4	23.35	4.69	3.94	6.30	110	25.79	5.79	6.38	6.30	4.53	4.49	117
CVFM05-616□DCY	1/2	4	23.07	3.35	2.32	4.88	176	24.49	3.50	3.58	4.88	2.40	-	181
CVFM08-616□DCY	3/4	4	24.65	4.49	3.82	5.83	185	26.34	5.59	5.51	5.83	3.66	4.17	192
CVFM1-616□DCY	1	4	24.65	4.49	3.82	5.83	185	26.34	5.59	5.51	5.83	3.66	4.17	192
CVFM1H-616□DCY	1.5	4	25.94	4.69	3.94	6.30	194	28.39	5.79	6.38	6.30	4.53	4.49	205
CVFM2-616□DCY	2	4	25.94	4.69	3.94	6.30	194	28.39	5.79	6.38	6.30	4.53	4.49	205
CVFM3-616□DCY	3	4	26.73	4.96	4.13	6.81	203	29.21	6.06	6.61	6.81	4.76	4.88	218
CVFM5-616□DCY	5	4	27.64	5.79	5.00	8.35	225	30.47	6.69	7.83	8.35	5.20	6.18	247
CVFM8-616□DCY	7.5	4	29.37	5.79	5.00	8.35	240	32.20	6.69	7.83	8.35	5.20	6.18	262
CVFM05-617□DCY	1/2	4	24.92	3.35	2.32	4.88	229	26.34	3.50	3.58	4.88	2.40	-	234
CVFM08-617□DCY	3/4	4	26.50	4.49	3.82	5.83	238	28.19	5.59	5.51	5.83	3.66	4.17	245
CVFM1-617□DCY	1	4	26.50	4.49	3.82	5.83	238	28.19	5.59	5.51	5.83	3.66	4.17	245
CVFM1H-617□DCY	1.5	4	27.80	4.69	3.94	6.30	247	30.24	5.79	6.38	6.30	4.53	4.49	258
CVFM2-617□DCY	2	4	27.80	4.69	3.94	6.30	247	30.24	5.79	6.38	6.30	4.53	4.49	258
CVFM3-617□DCY	3	4	28.58	4.96	4.13	6.81	256	31.06	6.06	6.61	6.81	4.76	4.88	271
CVFM5-617□DCY	5	4	29.49	5.79	5.00	8.35	278	32.32	6.69	7.83	8.35	5.20	6.18	300
CVFM8-617□DCY	7.5	4	31.22	5.79	5.00	8.35	293	34.06	6.69	7.83	8.35	5.20	6.18	315
CVFM1-618□DBY	1	4	28.86	4.49	3.82	5.83	340	30.55	5.59	5.51	5.83	3.66	4.17	346
CVFM1H-618□DBY	1.5	4	30.16	4.69	3.94	6.30	348	32.60	5.79	6.38	6.30	4.53	4.49	359
CVFM2-618□DBY	2	4	30.16	4.69	3.94	6.30	348	32.60	5.79	6.38	6.30	4.53	4.49	359
CVFM3-618□DBY	3	4	30.94	4.96	4.13	6.81	355	33.43	6.06	6.61	6.81	4.76	4.88	370
CVFM5-618□DBY	5	4	31.85	5.79	5.00	8.35	377	34.69	6.69	7.83	8.35	5.20	6.18	399
CVFM8-618□DBY	7.5	4	33.58	5.79	5.00	8.35	392	36.42	6.69	7.83	8.35	5.20	6.18	415
CVFM10-618□DBY	10	4	34.49	7.40	5.63	9.88	426	38.23	7.40	9.37	9.88	6.69	7.17	465
CVFM15-618□DBY	15	4	36.85	7.40	5.63	9.88	456	40.59	7.40	9.37	9.88	6.69	7.17	496
CVFM1-619□DAY	1	4	31.22	4.49	3.82	5.83	441	32.91	5.59	5.51	5.83	3.66	4.17	448
CVFM1H-619□DAY	1.5	4	32.52	4.69	3.94	6.30	450	34.96	5.79	6.38	6.30	4.53	4.49	461
CVFM2-619□DAY	2	4	32.52	4.69	3.94	6.30	450	34.96	5.79	6.38	6.30	4.53	4.49	461
CVFM3-619□DAY	3	4	33.31	4.96	4.13	6.81	459	35.79	6.06	6.61	6.81	4.76	4.88	474
CVFM5-619□DAY	5	4	34.21	5.79	5.00	8.35	481	37.05	6.69	7.83	8.35	5.20	6.18	503
CVFM8-619□DAY	7.5	4	35.94	5.79	5.00	8.35	496	38.78	6.69	7.83	8.35	5.20	6.18	518
CVFM5-619□DBY	5	4	34.84	5.79	5.00	8.35	496	37.68	6.69	7.83	8.35	5.20	6.18	518
CVFM8-619□DBY	7.5	4	36.57	5.79	5.00	8.35	512	39.41	6.69	7.83	8.35	5.20	6.18	534
CVFM10-619□DBY	10	4	37.48	7.40	5.63	9.88	545	41.22	7.40	9.37	9.88	6.69	7.17	584
CVFM15-619□DBY	15	4	39.84	7.40	5.63	9.88	576	43.58	7.40	9.37	9.88	6.69	7.17	615
CVFM20-619□DBY	20	4	43.39	9.13	11.61	12.76	690	46.93	9.13	15.16	12.76	8.66	-	763

Note: [1] 0 or 5 replaces □ depending on the model selected for the application. Please refer to the Gearmotor Selection Procedure and Tables in this section.

INTEGRAL VERTICAL F-FLANGE MOUNT
DOUBLE REDUCTION

CVFM-613□DC~619DB□[1]

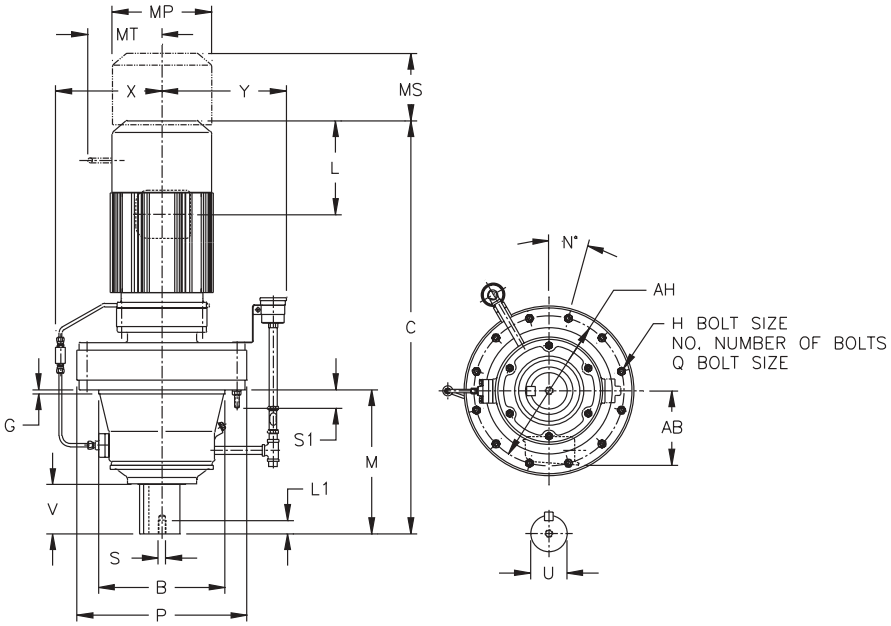

Metric (mm)[2]

Model CVFM	B g6	C	G	H	NO	M	N	P	Q	S1	AH	X	Y
613□DC	165	369	16	11	6	178	60	230	M10	31	205	-	-
614□DB	165	383	16	11	6	198	60	230	M10	31	205	-	-
616□DC	200	462	10	14	6	222	30	300	M12	35	270	196	230
617□DC	250	509	12	14	8	262	22.5	340	M12	41	300	218	260
618□DB	280	577	12	14	8	299	22.5	370	M12	38	330	233	260
619□DA	320	629	10	14	12	365	15	430	M12	41	380	255	260
619□DB	320	653	10	14	12	365	15	430	M12	41	380	255	260

Model CVFM	LOW SPEED SHAFT				
	U h6	V	S	L1	KEY
613□DC	50	61	M10	18	14 X 9 X 56
614□DB	50	81	M10	18	14 X 9 X 80
616□DC	60	80	M10	18	18 X 11 X 80
617□DC	70	84	M12	24	20 X 12 X 80
618□DB	80	100	M12	24	22 X 14 X 100
619□DA	95	125	M20	34	25 X 14 X 125
619□DB	95	125	M20	34	25 X 14 X 125

Notes: [1] 0 or 5 replaces □ depending on the model selected for the application. Please refer to the Gearmotor Selection Procedure and Tables in this section.
[2] The shaft dimensions shown above are hard metric sizes with metric keys. Units are available with shafting made to either DIN/ISO or JIS tolerances. Please consult factory for availability.

Dimensions shown are for reference only and are subject to change without notice, unless certified.
Certified prints are available after receipt of an order; consult factory.

CVFM-613□DC~619□DB[1] (con't.)

Metric (mm)

Model	Motor		Without Brake				Appx Wt (kg)	With Brake						Appx Wt (kg)
	kW	Pole	C	AB	L	MP		C	AB	L	MP	MS	MT	
CVFM02-613□DC	0.2	4	493	85	59	124	43	525	89	91	124	61	-	45
CVFM03-613□DC	0.25	4	493	85	59	124	43	525	89	91	124	61	-	45
CVFM05-613□DC	0.4	4	513	85	59	124	44	545	89	91	124	61	-	46
CVFM08-613□DC	0.55	4	554	114	97	148	48	597	142	140	148	93	106	51
CVFM1-613□DC	0.75	4	554	114	97	148	48	597	142	140	148	93	106	51
CVFM1H-613□DC	1.1	4	587	119	100	160	52	649	147	162	160	115	114	57
CVFM2-613□DC	1.5	4	587	119	100	160	52	649	147	162	160	115	114	57
CVFM3-613□DC	2.2	4	607	126	105	173	56	670	154	168	173	121	124	62
CVFM01-614□DB	0.1	4	457	85	35	119	40	492	89	70	124	49	-	42
CVFM02-614□DB	0.2	4	499	85	59	124	41	531	89	91	124	61	-	43
CVFM03-614□DB	0.25	4	499	85	59	124	41	531	89	91	124	61	-	43
CVFM05-614□DB	0.4	4	519	85	59	124	42	551	89	91	124	61	-	46
CVFM08-614□DB	0.55	4	560	114	97	148	46	603	142	140	148	93	106	49
CVFM1-614□DB	0.75	4	560	114	97	148	46	603	142	140	148	93	106	49
CVFM1H-614□DB	1.1	4	593	119	100	160	50	655	147	162	160	115	114	53
CVFM2-614□DB	1.5	4	593	119	100	160	50	655	147	162	160	115	114	53
CVFM05-616□DC	0.4	4	586	85	59	124	80	622	89	91	124	61	-	82
CVFM08-616□DC	0.55	4	626	114	97	148	84	669	142	140	148	93	106	87
CVFM1-616□DC	0.75	4	626	114	97	148	84	669	142	140	148	93	106	87
CVFM1H-616□DC	1.1	4	659	119	100	160	88	721	147	162	160	115	114	93
CVFM2-616□DC	1.5	4	659	119	100	160	88	721	147	162	160	115	114	93
CVFM3-616□DC	2.2	4	679	126	105	173	92	742	154	168	173	121	124	99
CVFM5-616□DC	3.7	4	702	147	127	212	102	774	170	199	212	132	157	112
CVFM8-616□DC	5.5	4	746	147	127	212	109	818	170	199	212	132	157	119
CVFM05-617□DC	0.4	4	633	85	59	124	104	669	89	91	124	61	-	106
CVFM08-617□DC	0.55	4	673	114	97	148	108	716	142	140	148	93	106	111
CVFM1-617□DC	0.75	4	673	114	97	148	108	716	142	140	148	93	106	111
CVFM1H-617□DC	1.1	4	706	119	100	160	112	768	147	162	160	115	114	117
CVFM2-617□DC	1.5	4	706	119	100	160	112	768	147	162	160	115	114	117
CVFM3-617□DC	2.2	4	726	126	105	173	116	789	154	168	173	121	124	123
CVFM5-617□DC	3.7	4	749	147	127	212	126	821	170	199	212	132	157	136
CVFM8-617□DC	5.5	4	793	147	127	212	133	865	170	199	212	132	157	143
CVFM1-618□DB	0.75	4	733	114	97	148	154	776	142	140	148	93	106	157
CVFM1H-618□DB	1.1	4	766	119	100	160	158	828	147	162	160	115	114	163
CVFM2-618□DB	1.5	4	766	119	100	160	158	828	147	162	160	115	114	163
CVFM3-618□DB	2.2	4	786	126	105	173	161	849	154	168	173	121	124	168
CVFM5-618□DB	3.7	4	809	147	127	212	171	881	170	199	212	132	157	181
CVFM8-618□DB	5.5	4	853	147	127	212	178	925	170	199	212	132	157	188
CVFM10-618□DB	7.5	4	876	188	143	251	193	971	188	238	251	170	182	211
CVFM15-618□DB	11	4	936	188	143	251	207	1031	188	238	251	170	182	225
CVFM1-619□DA	0.75	4	793	114	97	148	200	836	142	140	148	93	106	203
CVFM1H-619□DA	1.1	4	826	119	100	160	204	888	147	162	160	115	114	209
CVFM2-619□DA	1.5	4	826	119	100	160	204	888	147	162	160	115	114	209
CVFM3-619□DA	2.2	4	846	126	105	173	208	909	154	168	173	121	124	215
CVFM5-619□DA	3.7	4	869	147	127	212	218	941	170	199	212	132	157	228
CVFM8-619□DA	5.5	4	913	147	127	212	225	985	170	199	212	132	157	235
CVFM5-619□DB	3.7	4	885	147	127	212	225	957	170	199	212	132	157	235
CVFM8-619□DB	5.5	4	929	147	127	212	232	1001	170	199	212	132	157	242
CVFM10-619□DB	7.5	4	952	188	143	251	247	1047	188	238	251	170	182	265
CVFM15-619□DB	11	4	1012	188	143	251	261	1107	188	238	251	170	182	279
CVFM20-619□DB	15	4	1102	232	295	324	313	1192	232	385	324	220	-	346

Note: [1] 0 or 5 replaces □ depending on the model selected for the application. Please refer to the Gearmotor Selection Procedure and Tables in this section.

Dimensions shown are for reference only and are subject to change without notice, unless certified.
Certified prints are available after receipt of an order; consult factory.

SINGLE PHASE, INTEGRAL FOOT MOUNT
SINGLE REDUCTION

CNHM-6065-SG~612□[1]-SG

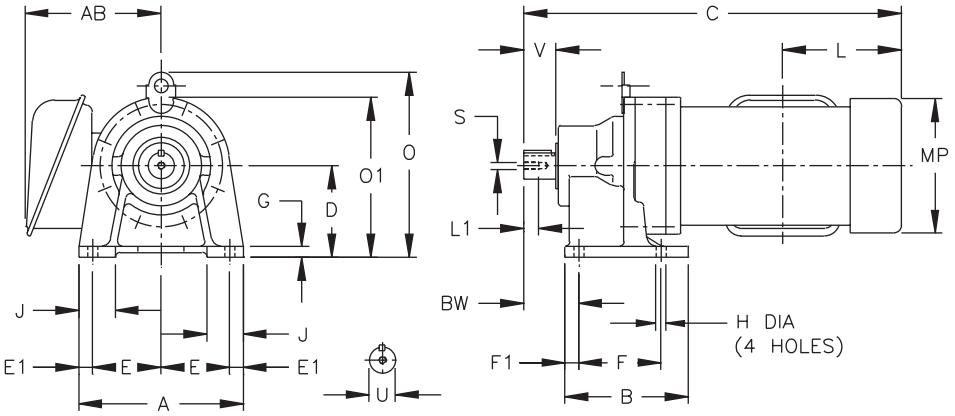

Inch (in)

Model CNHM	A	B	D	E	E1	F	F1	G	H	J	O	O1	P	BW
6065Y-SG	5.67	3.31	3.150	2.36	0.47	2.36	0.47	0.39	0.35	1.38	-	5.31	4.33	1.61
6075Y-SG	5.67	3.31	3.150	2.36	0.47	2.36	0.47	0.39	0.35	1.38	-	5.31	4.33	1.85
609□Y-SG	7.09	5.31	3.937	2.95	0.59	3.54	0.59	0.47	0.43	1.57	-	6.89	5.91	2.36
610□Y-SG	7.09	5.31	3.937	2.95	0.59	3.54	0.59	0.47	0.43	1.57	8.15	-	5.91	2.36
612□Y-SG	9.06	6.10	4.724	3.74	0.79	4.53	0.79	0.59	0.55	2.17	10.12	-	8.03	3.23

Model CNHM	LOW SPEED SHAFT				
	U*	V	S	L1	KEY
6065Y-SG	0.500	0.98	10-32UNF	0.63	1/8 X 1/8 X 0.79
6075Y-SG	0.750	1.18	12-28UNF	0.63	3/16 X 3/16 X 1.06
609□Y-SG	1.125	1.38	5/16-18UNC	0.79	1/4 X 1/4 X 1.18
610□Y-SG	1.125	1.38	5/16-18UNC	0.79	1/4 X 1/4 X 1.18
612□Y-SG	1.500	2.17	5/16-18UNC	0.79	3/8 X 3/8 X 1.77

*** Shaft Tolerances:**

Shaft Nominal Diameter (inches)	Tolerances (inches)
0.500 (1/2) through 0.625 (5/8)	+0.0000/-0.0004
0.750 (3/4) through 1.125 (1 1/8)	+0.0000/-0.0005
1.25 (1 1/4) through 1.875 (1 7/8)	+0.0000/-0.0006

MODEL CNHM	MOTOR HP	C	MP	AB	APPROX. WT (lb)
6065Y-SG	1/8 1/4	13.42	6.02	5.79	30
6075Y-SG	1/8 1/4	13.66	6.02	5.79	32
	1/3 1/2	15.08	6.02	5.79	36
609□Y-SG	1/8 1/4	15.79	6.02	5.79	46
	1/3 1/2	17.20	6.02	5.79	52
	3/4 1	17.60	7.83	6.38	66
610□Y-SG	1/3 1/2	17.76	6.02	5.79	52
	3/4 1	18.15	7.83	6.50	66
612□Y-SG	3/4 1	18.98	7.83	6.50	94

Note: [1] 0 or 5 replaces □ depending on the model selected for the application. Please refer to the Gearmotor Selection Procedure and Tables in this section.

Dimensions shown are for reference only and are subject to change without notice, unless certified. Certified prints are available after receipt of an order; consult factory.

SINGLE PHASE, INTEGRAL VERTICAL V-FLANGE, SINGLE REDUCTION

CNVM-6065-SG~612□[1]-SG

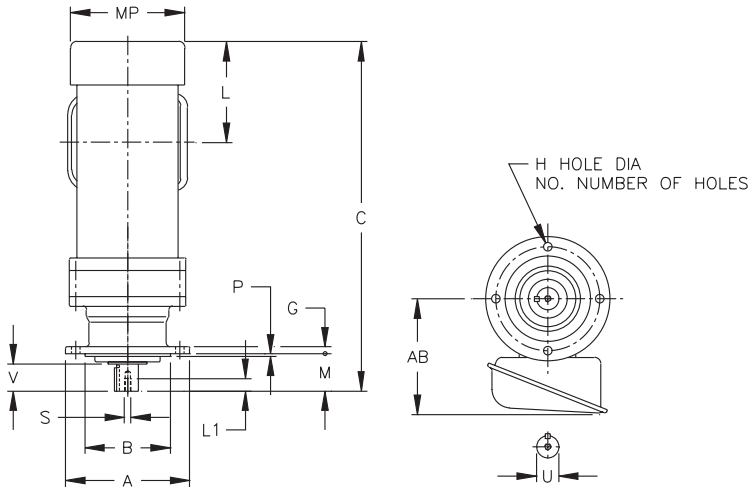

Inch (in)

Model CNVM	A	B	G	H	NO	M	P	AH
6065Y-SG	4.72	3.1484 3.1466	0.31	0.35	6	1.34	0.12	4.02
6075Y-SG	6.30	4.3293 4.3272	0.35	0.43	4	1.65	0.12	5.28
609□Y-SG	6.30	4.3293 4.3272	0.35	0.43	4	1.89	0.12	5.28
610□Y-SG	6.30	4.3293 4.3272	0.35	0.43	4	1.89	0.12	5.28
612□Y-SG	8.27	5.5101 5.5076	0.51	0.43	6	2.72	0.16	7.09

Model CNVM	LOW SPEED SHAFT				
	U*	V	S	L1	KEY
6065Y-SG	0.500	0.98	10-32UNF	0.63	1/8 X 1/8 X 0.79
6075Y-SG	0.750	1.18	12-28UNF	0.63	3/16 X 3/16 X 1.06
609□Y-SG	1.125	1.38	5/16-18UNC	0.79	1/4 X 1/4 X 1.18
610□Y-SG	1.125	1.38	5/16-18UNC	0.79	1/4 X 1/4 X 1.18
612□Y-SG	1.500	2.17	5/16-18UNC	0.79	3/8 X 3/8 X 1.77

*** Shaft Tolerances:**

Shaft Nominal Diameter (inches)	Tolerances (inches)
0.500 (1/2) through 0.625 (5/8)	+0.0000/-0.0004
0.750 (3/4) through 1.125 (1 1/8)	+0.0000/-0.0005
1.25 (1 1/4) through 1.875 (1 7/8)	+0.0000/-0.0006

MODEL CNVM	MOTOR HP	C	MP	AB	APPROX. WT (lb)
6065Y-SG	1/8 1/4	13.42	6.02	5.79	27
6075Y-SG	1/8 1/4	13.66	6.02	5.79	31
	1/3 1/2	15.08	6.02	5.79	36
609□Y-SG	1/8 1/4	15.79	6.02	5.79	41
	1/3 1/2	17.20	6.02	5.79	48
	3/4 1	17.25	7.83	6.38	67
610□Y-SG	1/3 1/2	17.76	6.02	5.75	55
	3/4 1	17.80	7.83	6.50	74
612□Y-SG	3/4 1	18.63	7.83	6.50	94

Note: [1] 0 or 5 replaces □ depending on the model selected for the application. Please refer to the Gearmotor Selection Procedure and Tables in this section.

Dimensions shown are for reference only and are subject to change without notice, unless certified. Certified prints are available after receipt of an order; consult factory.

SELECTING A TORQUE LIMITER GEARMOTOR

The SM-Cyclo® torque limiter is designed for 24-hour service with uniform or slightly fluctuating loads. It is designed as a fail-safe to prevent system damage in the event of a jam, overload or other unusual event.

Consequently, it is typically selected by output torque. If the application involves frequent starts and stops, and/or heavy shock loads, please consult Sumitomo.

The preset torque must fall between the maximum and minimum values shown in the Gearmotor Torque Limiter Selection Tables. Units are available with either single or dual limit switches. A single limit switch is typically set at the desired cut-off torque. The use of two limit switches permits the use of an alarm at a torque value lower than the cut-off torque. Either single direction or bi-directional models are available.

All ratings in the selection tables are based on either 1750 RPM or 1450 RPM input speeds. . Please consult Sumitomo if an input speed other than 1750 RPM is required. The horsepower ratings shown at the top of the tables indicate standard motor and ratio combinations.

The selection tables have both English and Metric units.

SELECTION EXAMPLE

1. Desired output speed: 20 RPM
2. Input speed: 1750 RPM
3. Duty Cycle: Continuous operation
4. Single direction vertical shaft mixer
5. Uniform loading – 4000 in-lb
6. 3 HP 230/460V motor
7. Alarm setting desired 4500 in-lb.
8. Shut off torque 5200 in-lb.
9. Direct connected
10. Indoor installation
11. Normal loading 4000 in-lb
12. Output turns clockwise when viewed from shaft end

Step 1. Go to the 3 HP, 1750 RPM selection table	
Step 2. Find closest output speed in selection table:	19.9 RPM output speed
Step 3. Find a maximum preset torque value equal to or greater than the desired shut off torque	6900 lbs.> 5200 in-lbs.
Step 4. Compare minimum preset torque to alarm setting, alarm setting must be greater than minimum preset setting	4500 in-lbs. > 885 in-lbs.
Step 5. If selection is not direct connected, check overhung load rating	direct connected / not applicable
Step 6. Find frame size:	6135
Step 7. Use nomenclature pages to determine model number Complete specifications from previous page:	CVVM3-6130DCYTL-88 Normal Torque: 4000 in-lb Alarm Set Point: 4500 in-lb Shut Off Point: 5200 in-lb Driven Machine: Mixer Single Direction Operation Normal Ambient Conditions
Direction of Slow Speed Shaft: Clockwise Motor Input Speed and Power: 3 HP, 1750 RPM Load Conditions: Uniform loading, 24 hours/day Indoor Installation	

TORQUE LIMITER GEARMOTOR SELECTION TABLES – 60 Hz

1/4 HP, 0.2 kW, 60 Hz, 1750 RPM

Output Speed	Min. Preset Output Torque		Max. Preset Output Torque		Service Factor		Overhung Load		Selection[1]					
RPM	in•lb	N•m	in•lb	N•m	SF	AGMA Class	lb	N	HP Symbol	Frame Size	Shaft Spec.	AGMA Class		Ratio
0.189	2210	250	6900	780	-	-	3300	14700	02	6130TC	Y		- TL -	9251
			8320	940	-	-	3300	14700	02	6135TC	Y		- TL -	9251
			10900	1230	-	-	3590	16000	02	6140TC	Y		- TL -	9251
			12100	1370	-	-	3550	15800	02	6145TC	Y		- TL -	9251
			15600	1760	-	-	4960	22100	02	6160TB	Y		- TL -	9251
			18600	2100	-	-	4960	22100	02	6165TB	Y		- TL -	9251
0.160	2210	250	6900	780	-	-	3300	14700	02	6130TC	Y		- TL -	10933
			8320	940	-	-	3300	14700	02	6135TC	Y		- TL -	10933
			10900	1230	-	-	3590	16000	02	6140TC	Y		- TL -	10933
			12100	1370	-	-	3550	15800	02	6145TC	Y		- TL -	10933
			15600	1760	-	-	4960	22100	02	6160TB	Y		- TL -	10933
			18600	2100	-	-	4960	22100	02	6165TB	Y		- TL -	10933
0.128	3890	440	8050	910	-	-	3300	14700	02	6130TC	Y		- TL -	13629
			9290	1050	-	-	3300	14700	02	6135TC	Y		- TL -	13629
			10900	1230	-	-	3590	16000	02	6140TC	Y		- TL -	13629
			12100	1370	-	-	3590	16000	02	6145TC	Y		- TL -	13629
			15600	1760	-	-	4960	22100	02	6160TB	Y		- TL -	13629
			18600	2100	-	-	4960	22100	02	6165TB	Y		- TL -	13629
0.108	3010	340	6900	780	-	-	3300	14700	02	6130TC	Y		- TL -	16211
			8320	940	-	-	3300	14700	02	6135TC	Y		- TL -	16211
			10900	1230	-	-	3590	16000	02	6140TC	Y		- TL -	16211
			12100	1370	-	-	3530	15700	02	6145TC	Y		- TL -	16211
			15400	1740	-	-	4960	22100	02	6160TB	Y		- TL -	16211
			18600	2100	-	-	4960	22100	02	6165TB	Y		- TL -	16211
0.086	3010	340	6900	780	-	-	3300	14700	02	6130TC	Y		- TL -	20339
			8320	940	-	-	3300	14700	02	6135TC	Y		- TL -	20339
			10900	1230	-	-	3590	16000	02	6140TC	Y		- TL -	20339
			12100	1370	-	-	3530	15700	02	6145TC	Y		- TL -	20339
			15400	1740	-	-	4960	22100	02	6160TB	Y		- TL -	20339
			18600	2100	-	-	4960	22100	02	6165TB	Y		- TL -	20339
			22400	2530	-	-	6620	29500	02	6170TB	Y		- TL -	20339
			27900	3150	-	-	6620	29500	02	6175TB	Y		- TL -	20339
0.073	3010	340	6900	780	-	-	3300	14700	02	6130TC	Y		- TL -	24037
			8320	940	-	-	3300	14700	02	6135TC	Y		- TL -	24037
			10900	1230	-	-	3590	16000	02	6140TC	Y		- TL -	24037
			12100	1370	-	-	3530	15700	02	6145TC	Y		- TL -	24037
			15400	1740	-	-	4960	22100	02	6160TB	Y		- TL -	24037
			18600	2100	-	-	4960	22100	02	6165TB	Y		- TL -	24037
			22400	2530	-	-	6620	29500	02	6170TB	Y		- TL -	24037
			27900	3150	-	-	6620	29500	02	6175TB	Y		- TL -	24037
	4340	490	35900	4060	-	-	9360	41700	02	6180TA	Y		- TL -	24037
			44200	5000	-	-	9360	41700	02	6185TA	Y		- TL -	24037

Note: [1] Contact Sumitomo for dimensions.

1/4 HP, 0.2 kW, 60 Hz, 1750 RPM

Output Speed	Min. Preset Output Torque		Max. Preset Output Torque		Service Factor		Overhung Load		Selection[1]					
RPM	in•lb	N•m	in•lb	N•m	SF	AGMA Class	lb	N	HP Symbol	Frame Size	Shaft Spec.	AGMA Class		Ratio
0.063	3010	340	8050	910	-	-	3300	14700	02	6130TC	Y		- TL -	27907
			9290	1050	-	-	3300	14700	02	6135TC	Y		- TL -	27907
			10900	1230	-	-	3590	16000	02	6140TC	Y		- TL -	27907
			12100	1370	-	-	3590	16000	02	6145TC	Y		- TL -	27907
			15600	1760	-	-	4960	22100	02	6160TB	Y		- TL -	27907
			18600	2100	-	-	4960	22100	02	6165TB	Y		- TL -	27907
			22400	2530	-	-	6620	29500	02	6170TB	Y		- TL -	27907
			27900	3150	-	-	6620	29500	02	6175TB	Y		- TL -	27907
	4340	490	35800	4050	-	-	9360	41700	02	6180TA	Y		- TL -	27907
			44200	5000	-	-	9340	41600	02	6185TA	Y		- TL -	27907
0.056	3010	340	6900	780	-	-	3300	14700	02	6130TC	Y		- TL -	31433
			8320	940	-	-	3300	14700	02	6135TC	Y		- TL -	31433
			10900	1230	-	-	3590	16000	02	6140TC	Y		- TL -	31433
			12100	1370	-	-	3530	15700	02	6145TC	Y		- TL -	31433
			15400	1740	-	-	4960	22100	02	6160TB	Y		- TL -	31433
			18600	2100	-	-	4960	22100	02	6165TB	Y		- TL -	31433
			22400	2530	-	-	6620	29500	02	6170TB	Y		- TL -	31433
			27900	3150	-	-	6620	29500	02	6175TB	Y		- TL -	31433
	4340	490	35900	4060	-	-	9360	41700	02	6180TA	Y		- TL -	31433
			44200	5000	-	-	9360	41700	02	6185TA	Y		- TL -	31433
0.046	3010	340	8050	910	-	-	3300	14700	02	6130TC	Y		- TL -	38291
			9290	1050	-	-	3300	14700	02	6135TC	Y		- TL -	38291
			10900	1230	-	-	3590	16000	02	6140TC	Y		- TL -	38291
			12100	1370	-	-	3590	16000	02	6145TC	Y		- TL -	38291
			15600	1760	-	-	4960	22100	02	6160TB	Y		- TL -	38291
			18600	2100	-	-	4960	22100	02	6165TB	Y		- TL -	38291
			22400	2530	-	-	6620	29500	02	6170TB	Y		- TL -	38291
			27900	3150	-	-	6620	29500	02	6175TB	Y		- TL -	38291
	4340	490	35800	4050	-	-	9360	41700	02	6180TA	Y		- TL -	38291
			44200	5000	-	-	9340	41600	02	6185TA	Y		- TL -	38291
0.041	3010	340	8050	910	-	-	3300	14700	02	6130TC	Y		- TL -	43129
			9290	1050	-	-	3300	14700	02	6135TC	Y		- TL -	43129
			10900	1230	-	-	3590	16000	02	6140TC	Y		- TL -	43129
			12100	1370	-	-	3590	16000	02	6145TC	Y		- TL -	43129
			15600	1760	-	-	4960	22100	02	6160TB	Y		- TL -	43129
			18600	2100	-	-	4960	22100	02	6165TB	Y		- TL -	43129
			22400	2530	-	-	6620	29500	02	6170TB	Y		- TL -	43129
			27900	3150	-	-	6620	29500	02	6175TB	Y		- TL -	43129
	4340	490	35800	4050	-	-	9360	41700	02	6180TA	Y		- TL -	43129
			44200	5000	-	-	9340	41600	02	6185TA	Y		- TL -	43129
0.033	3010	340	6900	780	-	-	3300	14700	02	6130TC	Y		- TL -	53621
			8320	940	-	-	3300	14700	02	6135TC	Y		- TL -	53621
			10900	1230	-	-	3590	16000	02	6140TC	Y		- TL -	53621
			12100	1370	-	-	3530	15700	02	6145TC	Y		- TL -	53621
			15400	1740	-	-	4960	22100	02	6160TB	Y		- TL -	53621
			18600	2100	-	-	4960	22100	02	6165TB	Y		- TL -	53621
			22400	2530	-	-	6620	29500	02	6170TB	Y		- TL -	53621
			27900	3150	-	-	6620	29500	02	6175TB	Y		- TL -	53621
	4340	490	35900	4060	-	-	9360	41700	02	6180TA	Y		- TL -	53621
			44200	5000	-	-	9360	41700	02	6185TA	Y		- TL -	53621

Note: [1] Contact Sumitomo for dimensions.

TORQUE LIMITER GEARMOTOR SELECTION TABLES – 60 Hz

1/4 HP, 0.2 kW, 60 Hz, 1750 RPM (con't.)

Output Speed	Min. Preset Output Torque		Max. Preset Output Torque		Service Factor		Overhung Load		Selection[1]					
RPM	in•lb	N•m	in•lb	N•m	SF	AGMA Class	lb	N	HP Symbol	Frame Size	Shaft Spec.	AGMA Class		Ratio
0.030	3010	340	8050	910	-	-	3300	14700	02	6130TC	Y		- TL -	59177
			9290	1050	-	-	3300	14700	02	6135TC	Y		- TL -	59177
			10900	1230	-	-	3590	16000	02	6140TC	Y		- TL -	59177
			12100	1370	-	-	3590	16000	02	6145TC	Y		- TL -	59177
			15600	1760	-	-	4960	22100	02	6160TB	Y		- TL -	59177
			18600	2100	-	-	4960	22100	02	6165TB	Y		- TL -	59177
			22400	2530	-	-	6620	29500	02	6170TB	Y		- TL -	59177
			27900	3150	-	-	6620	29500	02	6175TB	Y		- TL -	59177
	4340	490	35800	4050	-	-	9360	41700	02	6180TA	Y		- TL -	59177
			44200	5000	-	-	9340	41600	02	6185TA	Y		- TL -	59177
0.024	3010	340	8050	910	-	-	3300	14700	02	6130TC	Y		- TL -	73573
			9290	1050	-	-	3300	14700	02	6135TC	Y		- TL -	73573
			10900	1230	-	-	3590	16000	02	6140TC	Y		- TL -	73573
			12100	1370	-	-	3590	16000	02	6145TC	Y		- TL -	73573
			15600	1760	-	-	4960	22100	02	6160TB	Y		- TL -	73573
			18600	2100	-	-	4960	22100	02	6165TB	Y		- TL -	73573
			22400	2530	-	-	6620	29500	02	6170TB	Y		- TL -	73573
			27900	3150	-	-	6620	29500	02	6175TB	Y		- TL -	73573
	4340	490	35800	4050	-	-	9360	41700	02	6180TA	Y		- TL -	73573
			44200	5000	-	-	9340	41600	02	6185TA	Y		- TL -	73573
0.022	3010	340	6900	780	-	-	3300	14700	02	6130TC	Y		- TL -	79507
			8320	940	-	-	3300	14700	02	6135TC	Y		- TL -	79507
			10900	1230	-	-	3590	16000	02	6140TC	Y		- TL -	79507
			12100	1370	-	-	3530	15700	02	6145TC	Y		- TL -	79507
			15400	1740	-	-	4960	22100	02	6160TB	Y		- TL -	79507
			18600	2100	-	-	4960	22100	02	6165TB	Y		- TL -	79507
			22400	2530	-	-	6620	29500	02	6170TB	Y		- TL -	79507
			27900	3150	-	-	6620	29500	02	6175TB	Y		- TL -	79507
	4340	490	35900	4060	-	-	9360	41700	02	6180TA	Y		- TL -	79507
			44200	5000	-	-	9360	41700	02	6185TA	Y		- TL -	79507
	8670	980	56500	6380	-	-	13200	59000	02	6190TA	Y		- TL -	79507
			70400	7960	-	-	13200	59000	02	6195TA	Y		- TL -	79507
	19100	2160	82300	9300	-	-	18900	84100	02	6205TD	Y		- TL -	79507
0.016	3010	340	8050	910	-	-	3300	14700	02	6130TC	Y		- TL -	109091
			9290	1050	-	-	3300	14700	02	6135TC	Y		- TL -	109091
			10900	1230	-	-	3590	16000	02	6140TC	Y		- TL -	109091
			12100	1370	-	-	3590	16000	02	6145TC	Y		- TL -	109091
			15600	1760	-	-	4960	22100	02	6160TB	Y		- TL -	109091
			18600	2100	-	-	4960	22100	02	6165TB	Y		- TL -	109091
			22400	2530	-	-	6620	29500	02	6170TB	Y		- TL -	109091
			27900	3150	-	-	6620	29500	02	6175TB	Y		- TL -	109091
	4340	490	35800	4050	-	-	9360	41700	02	6180TA	Y		- TL -	109091
			44200	5000	-	-	9340	41600	02	6185TA	Y		- TL -	109091
	8670	980	56500	6380	-	-	13200	58600	02	6190TA	Y		- TL -	109091
			70400	7960	-	-	13000	58100	02	6195TA	Y		- TL -	109091
	19100	2160	82300	9300	-	-	18900	84100	02	6205TD	Y		- TL -	109091
	23400	2650	112000	12700	-	-	23400	104000	02	6215TB	Y		- TL -	109091

Note: [1] Contact Sumitomo for dimensions.

1/4 HP, 0.2 kW, 60 Hz, 1750 RPM

Output Speed	Min. Preset Output Torque		Max. Preset Output Torque		Service Factor		Overhung Load		Selection[1]					
RPM	in•lb	N•m	in•lb	N•m	SF	AGMA Class	lb	N	HP Symbol	Frame Size	Shaft Spec.	AGMA Class		Ratio
0.012	3010	340	8050	910	-	-	3300	14700	02	6130TC	Y		- TL -	149683
			9290	1050	-	-	3300	14700	02	6135TC	Y		- TL -	149683
			10900	1230	-	-	3590	16000	02	6140TC	Y		- TL -	149683
			12100	1370	-	-	3590	16000	02	6145TC	Y		- TL -	149683
			15600	1760	-	-	4960	22100	02	6160TB	Y		- TL -	149683
			18600	2100	-	-	4960	22100	02	6165TB	Y		- TL -	149683
			22400	2530	-	-	6620	29500	02	6170TB	Y		- TL -	149683
			27900	3150	-	-	6620	29500	02	6175TB	Y		- TL -	149683
	4340	490	35800	4050	-	-	9360	41700	02	6180TA	Y		- TL -	149683
			44200	5000	-	-	9340	41600	02	6185TA	Y		- TL -	149683
	8670	980	56500	6380	-	-	13200	58600	02	6190TA	Y		- TL -	149683
			70400	7960	-	-	13000	58100	02	6195TA	Y		- TL -	149683
	19100	2160	82300	9300	-	-	18900	84100	02	6205TD	Y		- TL -	149683
	23400	2650	112000	12700	-	-	23400	104000	02	6215TB	Y		- TL -	149683
0.0039	3010	340	7480	845	-	-	3300	14700	02	6130TC	Y		- TL -	446571
			8630	975	-	-	3300	14700	02	6135TC	Y		- TL -	446571
			10900	1230	-	-	3590	16000	02	6140TC	Y		- TL -	446571
			15600	1760	-	-	4960	22100	02	6160TB	Y		- TL -	446571
			18100	2050	-	-	4890	21800	02	6165TB	Y		- TL -	446571
			22400	2530	-	-	6620	29500	02	6170TB	Y		- TL -	446571
			27900	3150	-	-	6620	29500	02	6175TB	Y		- TL -	446571
	4780	540	35900	4060	-	-	9360	41700	02	6180TA	Y		- TL -	446571
			44200	5000	-	-	9360	41700	02	6185TA	Y		- TL -	446571
	8670	980	56500	6380	-	-	13200	58900	02	6190TA	Y		- TL -	446571
			70400	7960	-	-	13100	58400	02	6195TA	Y		- TL -	446571
	23400	2650	100000	11300	-	-	23400	104000	02	6215TB	Y		- TL -	446571
0.0027	17300	1960	35900	4060	-	-	9360	41700	02	6180TC	Y		- TL -	658503
			44200	5000	-	-	9360	41700	02	6185TC	Y		- TL -	658503
			56500	6380	-	-	13200	58900	02	6190TD	Y		- TL -	658503
			70400	7960	-	-	13100	58400	02	6195TD	Y		- TL -	658503
	23400	2650	100000	11300	-	-	23400	104000	02	6215TB	Y		- TL -	658503

Note: [1] Contact Sumitomo for dimensions.

TORQUE LIMITER GEARMOTOR SELECTION TABLES – 60 Hz

1/2 HP, 0.4 kW, 60 Hz, 1750 RPM

Output Speed	Min. Preset Output Torque		Max. Preset Output Torque		Service Factor		Overhung Load		Selection[1]					
RPM	in•lb	N•m	in•lb	N•m	SF	AGMA Class	lb	N	HP Symbol	Frame Size	Shaft Spec.	AGMA Class		Ratio
34.3	442	50	885	100	1.40	II	1210	5400	05	6100	Y	B	- TL -	51
29.7	442	50	1020	115	1.29	I	1210	5400	05	6100	Y	A	- TL -	59
24.6	442	50	1190	135	1.40	II	1210	5400	05	6105	Y	B	- TL -	71
20.1	442	50	1500	170	1.41	II	1210	5400	05	6105	Y	B	- TL -	87
6.41	1770	200	4340	490	1.46	II	3300	14700	05	6130DC	Y	B	- TL -	273
5.49	2210	250	5090	575	1.24	I	3300	14700	05	6130DC	Y	A	- TL -	319
4.64	2210	250	6020	680	1.05	I	3300	14700	05	6130DC	Y	A	- TL -	377
					1.27	I	3300	14700	05	6135DC	Y	A	- TL -	377
3.70	3010	340	6900	780	-	-	3300	14700	05	6130DC	Y		- TL -	473
			7520	850	1.01	I	3300	14700	05	6135DC	Y	A	- TL -	473
					1.32	II	3590	16000	05	6140DC	Y	B	- TL -	473
3.13	3010	340	6900	780	-	-	3300	14700	05	6130DC	Y		- TL -	559
			8320	940	-	-	3300	14700	05	6135DC	Y		- TL -	559
			8940	1010	1.12	I	3590	16000	05	6140DC	Y	A	- TL -	559
2.70	3890	440	8050	910	-	-	3300	14700	05	6130DC	Y		- TL -	649
			9290	1050	-	-	3300	14700	05	6135DC	Y		- TL -	649
			10400	1170	-	-	3590	16000	05	6140DC	Y		- TL -	649
					1.07	I	3590	16000	05	6145DC	Y	A	- TL -	649
					1.38	II	4960	22100	05	6160DB	Y	B	- TL -	649
2.39	3010	340	6900	780	-	-	3300	14700	05	6130DC	Y		- TL -	731
			8320	940	-	-	3300	14700	05	6135DC	Y		- TL -	731
			10900	1230	-	-	3590	16000	05	6140DC	Y		- TL -	731
			11700	1320	-	-	3570	15900	05	6145DC	Y		- TL -	731
					1.21	I	4960	22100	05	6160DB	Y	A	- TL -	731
2.08	2210	250	6900	780	-	-	3300	14700	05	6130DC	Y		- TL -	841
			8320	940	-	-	3300	14700	05	6135DC	Y		- TL -	841
			10900	1230	-	-	3590	16000	05	6140DC	Y		- TL -	841
			12100	1370	-	-	3550	15800	05	6145DC	Y		- TL -	841
			13400	1520	1.07	I	4960	22100	05	6160DB	Y	A	- TL -	841
					1.27	I	4960	22100	05	6165DB	Y	A	- TL -	841
1.74	3890	440	8050	910	-	-	3300	14700	05	6130DC	Y		- TL -	1003
			9290	1050	-	-	3300	14700	05	6135DC	Y		- TL -	1003
			10900	1230	-	-	3590	16000	05	6140DC	Y		- TL -	1003
			12100	1370	-	-	3590	16000	05	6145DC	Y		- TL -	1003
			15600	1760	-	-	4960	22100	05	6160DB	Y		- TL -	1003
			16000	1810	1.07	I	4960	22100	05	6165DB	Y	A	- TL -	1003
					1.28	I	6620	29500	05	6170DB	Y	A	- TL -	1003
1.40	3010	340	6900	780	-	-	3300	14700	05	6130DC	Y		- TL -	1247
			8320	940	-	-	3300	14700	05	6135DC	Y		- TL -	1247
			10900	1230	-	-	3590	16000	05	6140DC	Y		- TL -	1247
			12100	1370	-	-	3530	15700	05	6145DC	Y		- TL -	1247
			15400	1740	-	-	4960	22100	05	6160DB	Y		- TL -	1247
			18600	2100	-	-	4960	22100	05	6165DB	Y		- TL -	1247
			19900	2250	1.03	I	6620	29500	05	6170DB	Y	A	- TL -	1247
					1.29	I	6620	29500	05	6175DB	Y	A	- TL -	1247

Note: [1] Contact Sumitomo for dimensions.

1/2 HP, 0.4 kW, 60 Hz, 1750 RPM

Output Speed	Min. Preset Output Torque		Max. Preset Output Torque		Service Factor		Overhung Load		Selection[1]					
RPM	in•lb	N•m	in•lb	N•m	SF	AGMA Class	lb	N	HP Symbol	Frame Size	Shaft Spec.	AGMA Class		Ratio
1.18	4340	490	7480	845	-	-	3300	14700	05	6130DC	Y		- TL -	1479
			8630	975	-	-	3300	14700	05	6135DC	Y		- TL -	1479
			10900	1230	-	-	3590	16000	05	6140DC	Y		- TL -	1479
			15600	1760	-	-	4960	22100	05	6160DB	Y		- TL -	1479
			18100	2050	-	-	4890	21800	05	6165DB	Y		- TL -	1479
			22400	2530	-	-	6620	29500	05	6170DB	Y		- TL -	1479
			23600	2670	1.08	I	6620	29500	05	6175DB	Y	A	- TL -	1479
0.946	3010	340	6900	780	-	-	3300	14700	05	6130DC	Y		- TL -	1849
			8320	940	-	-	3300	14700	05	6135DC	Y		- TL -	1849
			10900	1230	-	-	3590	16000	05	6140DC	Y		- TL -	1849
			12100	1370	-	-	3530	15700	05	6145DC	Y		- TL -	1849
			15400	1740	-	-	4960	22100	05	6160DB	Y		- TL -	1849
			18600	2100	-	-	4960	22100	05	6165DB	Y		- TL -	1849
			22400	2530	-	-	6620	29500	05	6170DB	Y		- TL -	1849
			27900	3150	-	-	6620	29500	05	6175DB	Y		- TL -	1849
	4340	490	29600	3340	1.12	I	9360	41700	05	6180DA	Y	A	- TL -	1849
0.847	4340	490	8050	910	-	-	3300	14700	05	6130DC	Y		- TL -	2065
			9290	1050	-	-	3300	14700	05	6135DC	Y		- TL -	2065
			10900	1230	-	-	3590	16000	05	6140DC	Y		- TL -	2065
			12100	1370	-	-	3590	16000	05	6145DC	Y		- TL -	2065
			15600	1760	-	-	4960	22100	05	6160DB	Y		- TL -	2065
			18600	2100	-	-	4960	22100	05	6165DB	Y		- TL -	2065
			22400	2530	-	-	6620	29500	05	6170DB	Y		- TL -	2065
			27900	3150	-	-	6620	29500	05	6175DB	Y		- TL -	2065
			33000	3730	-	-	9360	41700	05	6180DA	Y		- TL -	2065
			33000	3730	1.23	I	9360	41700	05	6185DA	Y	A	- TL -	2065
0.690	4340	490	8050	910	-	-	3300	14700	05	6130DC	Y		- TL -	2537
			9290	1050	-	-	3300	14700	05	6135DC	Y		- TL -	2537
			10900	1230	-	-	3590	16000	05	6140DC	Y		- TL -	2537
			12100	1370	-	-	3590	16000	05	6145DC	Y		- TL -	2537
			15600	1760	-	-	4960	22100	05	6160DB	Y		- TL -	2537
			18600	2100	-	-	4960	22100	05	6165DB	Y		- TL -	2537
			22400	2530	-	-	6620	29500	05	6170DB	Y		- TL -	2537
			27900	3150	-	-	6620	29500	05	6175DB	Y		- TL -	2537
			35800	4050	-	-	9360	41700	05	6180DA	Y		- TL -	2537
			40500	4580	1.00	I	9360	41700	05	6185DA	Y	A	- TL -	2537
0.575	4340	490	7480	845	-	-	3300	14700	05	6130DC	Y		- TL -	3045
			8630	975	-	-	3300	14700	05	6135DC	Y		- TL -	3045
			10900	1230	-	-	3590	16000	05	6140DC	Y		- TL -	3045
			15600	1760	-	-	4960	22100	05	6160DB	Y		- TL -	3045
			18100	2050	-	-	4890	21800	05	6165DB	Y		- TL -	3045
			22400	2530	-	-	6620	29500	05	6170DB	Y		- TL -	3045
			27900	3150	-	-	6620	29500	05	6175DB	Y		- TL -	3045
			35900	4060	-	-	9360	41700	05	6180DA	Y		- TL -	3045
			44200	5000	-	-	9360	41700	05	6185DA	Y		- TL -	3045

Note: [1] Contact Sumitomo for dimensions.

TORQUE LIMITER GEARMOTOR SELECTION TABLES – 60 Hz

1/2 HP, 0.4 kW, 60 Hz, 1750 RPM (con't.)

Output Speed	Min. Preset Output Torque		Max. Preset Output Torque		Service Factor		Overhung Load		Selection[1]					
RPM	in•lb	N•m	in•lb	N•m	SF	AGMA Class	lb	N	HP Symbol	Frame Size	Shaft Spec.	AGMA Class		Ratio
0.503	4340	490	8050	910	-	-	3300	14700	05	6130DC	Y		- TL -	3481
			9290	1050	-	-	3300	14700	05	6135DC	Y		- TL -	3481
			10900	1230	-	-	3590	16000	05	6140DC	Y		- TL -	3481
			12100	1370	-	-	3590	16000	05	6145DC	Y		- TL -	3481
			15600	1760	-	-	4960	22100	05	6160DB	Y		- TL -	3481
			18600	2100	-	-	4960	22100	05	6165DB	Y		- TL -	3481
			22400	2530	-	-	6620	29500	05	6170DB	Y		- TL -	3481
			27900	3150	-	-	6620	29500	05	6175DB	Y		- TL -	3481
			35800	4050	-	-	9360	41700	05	6180DA	Y		- TL -	3481
			44200	5000	-	-	9340	41600	05	6185DA	Y		- TL -	3481
0.394	4780	540	7480	845	-	-	3300	14700	05	6130DC	Y		- TL -	4437
			8630	975	-	-	3300	14700	05	6135DC	Y		- TL -	4437
			10900	1230	-	-	3590	16000	05	6140DC	Y		- TL -	4437
			15600	1760	-	-	4960	22100	05	6160DB	Y		- TL -	4437
			18100	2050	-	-	4890	21800	05	6165DB	Y		- TL -	4437
			22400	2530	-	-	6620	29500	05	6170DB	Y		- TL -	4437
			27900	3150	-	-	6620	29500	05	6175DB	Y		- TL -	4437
			35900	4060	-	-	9360	41700	05	6180DA	Y		- TL -	4437
			44200	5000	-	-	9360	41700	05	6185DA	Y		- TL -	4437
0.341	4780	540	7480	845	-	-	3300	14700	05	6130DC	Y		- TL -	5133
			8630	975	-	-	3300	14700	05	6135DC	Y		- TL -	5133
			10900	1230	-	-	3590	16000	05	6140DC	Y		- TL -	5133
			15600	1760	-	-	4960	22100	05	6160DB	Y		- TL -	5133
			18100	2050	-	-	4890	21800	05	6165DB	Y		- TL -	5133
			22400	2530	-	-	6620	29500	05	6170DB	Y		- TL -	5133
			27900	3150	-	-	6620	29500	05	6175DB	Y		- TL -	5133
			35900	4060	-	-	9360	41700	05	6180DA	Y		- TL -	5133
			44200	5000	-	-	9360	41700	05	6185DA	Y		- TL -	5133
0.283	4780	540	7480	845	-	-	3300	14700	05	6130DC	Y		- TL -	6177
			8630	975	-	-	3300	14700	05	6135DC	Y		- TL -	6177
			10900	1230	-	-	3590	16000	05	6140DC	Y		- TL -	6177
			15600	1760	-	-	4960	22100	05	6160DB	Y		- TL -	6177
			18100	2050	-	-	4890	21800	05	6165DB	Y		- TL -	6177
			22400	2530	-	-	6620	29500	05	6170DB	Y		- TL -	6177
			27900	3150	-	-	6620	29500	05	6175DB	Y		- TL -	6177
			35900	4060	-	-	9360	41700	05	6180DA	Y		- TL -	6177
			44200	5000	-	-	9360	41700	05	6185DA	Y		- TL -	6177
0.231	4780	540	7480	845	-	-	3300	14700	05	6130DC	Y		- TL -	7569
			8630	975	-	-	3300	14700	05	6135DC	Y		- TL -	7569
			10900	1230	-	-	3590	16000	05	6140DC	Y		- TL -	7569
			15600	1760	-	-	4960	22100	05	6160DB	Y		- TL -	7569
			18100	2050	-	-	4890	21800	05	6165DB	Y		- TL -	7569
			22400	2530	-	-	6620	29500	05	6170DB	Y		- TL -	7569
			27900	3150	-	-	6620	29500	05	6175DB	Y		- TL -	7569
			35900	4060	-	-	9360	41700	05	6180DA	Y		- TL -	7569
			44200	5000	-	-	9360	41700	05	6185DA	Y		- TL -	7569

Note: [1] Contact Sumitomo for dimensions.

1/2 HP, 0.4 kW, 60 Hz, 1750 RPM

Output Speed	Min. Preset Output Torque		Max. Preset Output Torque		Service Factor		Overhung Load		Selection[1]					
RPM	in•lb	N•m	in•lb	N•m	SF	AGMA Class	lb	N	HP Symbol	Frame Size	Shaft Spec.	AGMA Class		Ratio
0.189	2570	290	22400	2530	-	-	6620	29500	05	6170TB	Y		- TL -	9251
			27900	3150	-	-	6620	29500	05	6175TB	Y		- TL -	9251
	4340	490	35800	4050	-	-	9360	41700	05	6180TA	Y		- TL -	9251
			41600	4700	-	-	9360	41700	05	6185TA	Y		- TL -	9251
0.160	2570	290	22400	2530	-	-	6620	29500	05	6170TB	Y		- TL -	10933
			27900	3150	-	-	6620	29500	05	6175TB	Y		- TL -	10933
	4340	490	35800	4050	-	-	9360	41700	05	6180TA	Y		- TL -	10933
			44200	5000	-	-	9360	41700	05	6185TC	Y		- TL -	10933
0.128	3890	440	22400	2530	-	-	6620	29500	05	6170TB	Y		- TL -	13629
			27900	3150	-	-	6620	29500	05	6175TB	Y		- TL -	13629
	4340	490	35800	4050	-	-	9360	41700	05	6180TA	Y		- TL -	13629
			44200	5000	-	-	9340	41600	05	6185TA	Y		- TL -	13629
0.108	3010	340	22400	2530	-	-	6620	29500	05	6170TB	Y		- TL -	16211
			27900	3150	-	-	6620	29500	05	6175TB	Y		- TL -	16211
	4340	490	35900	4060	-	-	9360	41700	05	6180TA	Y		- TL -	16211
			44200	5000	-	-	9360	41700	05	6185TA	Y		- TL -	16211
0.086	4340	490	35900	4060	-	-	9360	41700	05	6180TA	Y		- TL -	20339
			44200	5000	-	-	9360	41700	05	6185TA	Y		- TL -	20339
	8670	980	56500	6380	-	-	13200	59000	05	6190TA	Y		- TL -	20339
			70400	7960	-	-	13200	59000	05	6195TA	Y		- TL -	20339
	19100	2160	82300	9300	-	-	18900	84100	05	6205TD	Y		- TL -	20339
0.073	8670	980	56500	6380	-	-	13200	59000	05	6190TA	Y		- TL -	24037
			70400	7960	-	-	13200	59000	05	6195TA	Y		- TL -	24037
	19100	2160	82300	9300	-	-	18900	84100	05	6205TD	Y		- TL -	24037
0.063	8670	980	56500	6380	-	-	13200	58600	05	6190TA	Y		- TL -	27907
			70400	7960	-	-	13000	58100	05	6195TA	Y		- TL -	27907
	19100	2160	82300	9300	-	-	18900	84100	05	6205TD	Y		- TL -	27907
	23400	2650	112000	12700	-	-	23400	104000	05	6215TB	Y		- TL -	27907
0.056	8670	980	56500	6380	-	-	13200	59000	05	6190TA	Y		- TL -	31433
			70400	7960	-	-	13200	59000	05	6195TA	Y		- TL -	31433
	19100	2160	82300	9300	-	-	18900	84100	05	6205TD	Y		- TL -	31433
	23400	2650	112000	12700	-	-	23400	104000	05	6215TB	Y		- TL -	31433
0.046	8670	980	56500	6380	-	-	13200	58600	05	6190TA	Y		- TL -	38291
			70400	7960	-	-	13000	58100	05	6195TA	Y		- TL -	38291
	19100	2160	82300	9300	-	-	18900	84100	05	6205TD	Y		- TL -	38291
	23400	2650	112000	12700	-	-	23400	104000	05	6215TB	Y		- TL -	38291
	30300	3430	141000	15900	-	-	32600	145000	05	6225TB	Y		- TL -	38291
0.041	8670	980	56500	6380	-	-	13200	58600	05	6190TA	Y		- TL -	43129
			70400	7960	-	-	13000	58100	05	6195TA	Y		- TL -	43129
	19100	2160	82300	9300	-	-	18900	84100	05	6205TD	Y		- TL -	43129
	23400	2650	112000	12700	-	-	23400	104000	05	6215TB	Y		- TL -	43129
	30300	3430	141000	15900	-	-	32600	145000	05	6225TB	Y		- TL -	43129
	39000	4410	181000	20500	-	-	40200	179000	05	6235TA	Y		- TL -	43129

Note: [1] Contact Sumitomo for dimensions.

TORQUE LIMITER GEARMOTOR SELECTION TABLES – 60 Hz

1/2 HP, 0.4 kW, 60 Hz, 1750 RPM (con't.)

Output Speed	Min. Preset Output Torque		Max. Preset Output Torque		Service Factor		Overhung Load		Selection[1]					
RPM	in•lb	N•m	in•lb	N•m	SF	AGMA Class	lb	N	HP Symbol	Frame Size	Shaft Spec.	AGMA Class		Ratio
0.033	8670	980	56500	6380	-	-	13200	59000	05	6190TA	Y		- TL -	53621
			70400	7960	-	-	13200	59000	05	6195TA	Y		- TL -	53621
	19100	2160	82300	9300	-	-	18900	84100	05	6205TD	Y		- TL -	53621
	23400	2650	112000	12700	-	-	23400	104000	05	6215TB	Y		- TL -	53621
	30300	3430	142000	16000	-	-	32600	145000	05	6225TB	Y		- TL -	53621
	39000	4410	181000	20500	-	-	40200	179000	05	6235TA	Y		- TL -	53621
	47800	5400	228000	25800	-	-	46700	208000	05	6245TA	Y		- TL -	53621
0.030	8670	980	56500	6380	-	-	13200	58600	05	6190TA	Y		- TL -	59177
			70400	7960	-	-	13000	58100	05	6195TA	Y		- TL -	59177
	19100	2160	82300	9300	-	-	18900	84100	05	6205TD	Y		- TL -	59177
	23400	2650	112000	12700	-	-	23400	104000	05	6215TB	Y		- TL -	59177
	30300	3430	141000	15900	-	-	32600	145000	05	6225TB	Y		- TL -	59177
	39000	4410	181000	20500	-	-	40200	179000	05	6235TA	Y		- TL -	59177
	47800	5400	228000	25800	-	-	46700	208000	05	6245TA	Y		- TL -	59177
0.024	8670	980	56500	6380	-	-	13200	58600	05	6190TA	Y		- TL -	73573
			70400	7960	-	-	13000	58100	05	6195TA	Y		- TL -	73573
	19100	2160	82300	9300	-	-	18900	84100	05	6205TD	Y		- TL -	73573
	23400	2650	112000	12700	-	-	23400	104000	05	6215TB	Y		- TL -	73573
	30300	3430	141000	15900	-	-	32600	145000	05	6225TB	Y		- TL -	73573
	39000	4410	181000	20500	-	-	40200	179000	05	6235TA	Y		- TL -	73573
	47800	5400	228000	25800	-	-	46700	208000	05	6245TA	Y		- TL -	73573
	73800	8340	305000	34500	-	-	57900	258000	05	6255TA	Y		- TL -	73573
0.022	23400	2650	112000	12700	-	-	23400	104000	05	6215TB	Y		- TL -	79507
	30300	3430	142000	16000	-	-	32600	145000	05	6225TB	Y		- TL -	79507
	39000	4410	181000	20500	-	-	40200	179000	05	6235TA	Y		- TL -	79507
	47800	5400	228000	25800	-	-	46700	208000	05	6245TA	Y		- TL -	79507
	65100	7360	305000	34500	-	-	57900	258000	05	6255TA	Y		- TL -	79507
0.016	30300	3430	141000	15900	-	-	32600	145000	05	6225TB	Y		- TL -	109091
	39000	4410	181000	20500	-	-	40200	179000	05	6235TA	Y		- TL -	109091
	47800	5400	228000	25800	-	-	46700	208000	05	6245TA	Y		- TL -	109091
	73800	8340	305000	34500	-	-	57900	258000	05	6255TA	Y		- TL -	109091
0.012	30300	3430	141000	15900	-	-	32600	145000	05	6225TB	Y		- TL -	149683
	39000	4410	181000	20500	-	-	40200	179000	05	6235TA	Y		- TL -	149683
	47800	5400	228000	25800	-	-	46700	208000	05	6245TA	Y		- TL -	149683
	74700	8440	305000	34500	-	-	57900	258000	05	6255TA	Y		- TL -	149683
0.0039	30300	3430	134000	15100	-	-	32600	145000	05	6225TB	Y		- TL -	446571
	44200	5000	152000	17200	-	-	40200	179000	05	6235TA	Y		- TL -	446571
	47800	5400	200000	22600	-	-	46700	208000	05	6245TA	Y		- TL -	446571
	65100	7360	274000	31000	-	-	57900	258000	05	6255TA	Y		- TL -	446571
0.0027	30300	3430	134000	15100	-	-	32600	145000	05	6225TB	Y		- TL -	658503
	44200	5000	152000	17200	-	-	40200	179000	05	6235TA	Y		- TL -	658503
	47800	5400	200000	22600	-	-	46700	208000	05	6245TA	Y		- TL -	658503
	187000	21100	274000	31000	-	-	57900	258000	05	6255TD	Y		- TL -	658503

Note: [1] Contact Sumitomo for dimensions.

3/4 HP, 0.55 kW, 60 Hz, 1750 RPM

Output Speed	Min. Preset Output Torque		Max. Preset Output Torque		Service Factor		Overhung Load		Selection[1]					
RPM	in•lb	N•m	in•lb	N•m	SF	AGMA Class	lb	N	HP Symbol	Frame Size	Shaft Spec.	AGMA Class		Ratio
34.3	442	50	1190	135	1.02	I	1210	5400	08	6100	Y	A	- TL -	51
29.7	442	50	1370	155	1.29	I	1210	5400	08	6105	Y	A	- TL -	59
24.6	442	50	1680	190	1.02	I	1210	5400	08	6105	Y	A	- TL -	71
20.1	442	50	2080	235	1.03	I	1210	5400	08	6105	Y	A	- TL -	87
6.41	1770	200	5970	675	1.06	I	3300	14700	08	6130DC	Y	A	- TL -	273
5.49	2210	250	6900	780	-	-	3300	14700	08	6130DC	Y		- TL -	319
			6990	790	1.09	I	3300	14700	08	6135DC	Y	A	- TL -	319
4.64	2210	250	6900	780	-	-	3300	14700	08	6130DC	Y		- TL -	377
			8270	935	-	-	3300	14700	08	6135DC	Y		- TL -	377
					1.21	I	3590	16000	08	6140DC	Y	A	- TL -	377
3.70	3010	340	8320	940	-	-	3300	14700	08	6135DC	Y		- TL -	473
			10400	1170	-	-	3590	16000	08	6140DC	Y		- TL -	473
					1.07	I	3590	16000	08	6145DC	Y	A	- TL -	473
3.13	3010	340	10900	1230	-	-	3590	16000	08	6140DC	Y		- TL -	559
			12100	1370	-	-	3530	15700	08	6145DC	Y		- TL -	559
			12300	1390	1.15	I	4960	22100	08	6160DB	Y	A	- TL -	559
2.70	3890	440	12100	1370	-	-	3590	16000	08	6145DC	Y		- TL -	649
			14200	1610	-	-	4960	22100	08	6160DB	Y		- TL -	649
					1.20	I	4960	22100	08	6165DB	Y	A	- TL -	649
2.39	3010	340	15400	1740	-	-	4960	22100	08	6160DB	Y		- TL -	731
			16000	1810	1.06	I	4960	22100	08	6165DB	Y	A	- TL -	731
2.08	2210	250	15600	1760	-	-	4960	22100	08	6160DB	Y		- TL -	841
			18500	2090	-	-	4960	22100	08	6165DB	Y		- TL -	841
	2570	290			1.11	I	6620	29500	08	6170DB	Y	A	- TL -	841
1.74	3890	440	18600	2100	-	-	4960	22100	08	6165DB	Y		- TL -	1003
			22000	2490	-	-	6620	29500	08	6170DB	Y		- TL -	1003
					1.16	I	6620	29500	08	6175DB	Y	A	- TL -	1003
1.40	3010	340	22400	2530	-	-	6620	29500	08	6170DB	Y		- TL -	1247
			27300	3090	-	-	6620	29500	08	6175DB	Y		- TL -	1247
	4340	490			1.21	I	9360	41700	08	6180DA	Y	A	- TL -	1247
1.18	4340	490	27900	3150	-	-	6620	29500	08	6175DB	Y		- TL -	1479
			32500	3670	1.02	I	9360	41700	08	6180DA	Y	A	- TL -	1479
0.946	4340	490	35900	4060	-	-	9360	41700	08	6180DA	Y		- TL -	1849
			40600	4590	1.00	I	9360	41700	08	6185DA	Y	A	- TL -	1849
0.847	4340	490	44200	5000	-	-	9340	41600	08	6185DA	Y		- TL -	2065

Note: [1] Contact Sumitomo for dimensions.

TORQUE LIMITER GEARMOTOR SELECTION TABLES – 60 Hz

1 HP, 0.75 kW, 60 Hz, 1750 RPM

Output Speed	Min. Preset Output Torque		Max. Preset Output Torque		Service Factor		Overhung Load		Selection[1]					
RPM	in•lb	N•m	in•lb	N•m	SF	AGMA Class	lb	N	HP Symbol	Frame Size	Shaft Spec.	AGMA Class		Ratio
70.0	442	50	814	92	1.69	III	1210	5400	1	6100	Y	C	- TL -	25
60.3	442	50	929	105	1.61	III	1210	5400	1	6100	Y	C	- TL -	29
50.0	442	50	1110	125	1.30	II	1210	5400	1	6100	Y	B	- TL -	35
40.7	442	50	1370	155	1.04	I	1210	5400	1	6100	Y	A	- TL -	43
34.3	442	50	1640	185	1.03	I	1210	5400	1	6105	Y	A	- TL -	51
29.7	442	50	1900	215	0.94	-	1210	5380	1	6105	Y		- TL -	59
24.6	442	50	2300	260	1.60	III	2200	9810	1	6125	Y	C	- TL -	71
20.1	885	100	2830	320	1.89	III	3190	14200	1	6130	Y	C	- TL -	87
12.2	885	100	4250	480	1.48	II	3300	14700	1	6130DC	Y	B	- TL -	143
10.6	1330	150	4910	555	1.28	I	3300	14700	1	6130DC	Y	A	- TL -	165
8.97	1330	150	5840	660	1.09	I	3300	14700	1	6130DC	Y	A	- TL -	195
					1.31	II	3300	14700	1	6135DC	Y	B	- TL -	195
7.58	1770	200	6900	780	-	-	3300	14700	1	6130DC	Y		- TL -	231
					1.10	I	3300	14700	1	6135DC	Y	A	- TL -	231
6.41	1770	200	6900	780	-	-	3300	14700	1	6130DC	Y		- TL -	273
			8140	920	-	-	3300	14700	1	6135DC	Y		- TL -	273
					1.22	I	3590	16000	1	6140DC	Y	A	- TL -	273
5.49	2210	250	8320	940	-	-	3300	14700	1	6135DC	Y		- TL -	319
			9560	1080	1.04	I	3590	16000	1	6140DC	Y	A	- TL -	319
					1.17	I	3590	16000	1	6145DC	Y	A	- TL -	319
4.64	2210	250	10900	1230	-	-	3590	16000	1	6140DC	Y		- TL -	377
			11300	1280	0.99	-	3590	16000	1	6145DC	Y		- TL -	377
					1.27	I	4960	22100	1	6160DB	Y	A	- TL -	377
3.70	3010	340	12100	1370	-	-	3530	15700	1	6145DC	Y		- TL -	473
			14200	1600	1.00	I	4960	22100	1	6160DB	Y	A	- TL -	473
					1.21	I	4960	22100	1	6165DB	Y	A	- TL -	473
3.13	3010	340	15400	1740	-	-	4960	22100	1	6160DB	Y		- TL -	559
			16700	1890	1.02	I	4960	22100	1	6165DB	Y	A	- TL -	559
					1.23	I	6620	29500	1	6170DB	Y	A	- TL -	559
2.70	3890	440	18600	2100	-	-	4960	22100	1	6165DB	Y		- TL -	649
			19500	2200	1.06	I	6620	29500	1	6170DB	Y	A	- TL -	649
					1.32	II	6620	29500	1	6175DB	Y	B	- TL -	649
2.39	3010	340	18600	2100	-	-	4960	22100	1	6165DB	Y		- TL -	731
			21900	2470	-	-	6620	29500	1	6170DB	Y		- TL -	731
					1.17	I	6620	29500	1	6175DB	Y	A	- TL -	731
2.08	2570	290	22400	2530	-	-	6620	29500	1	6170DB	Y		- TL -	841
			25100	2840	1.02	I	6620	29500	1	6175DB	Y	A	- TL -	841
	4340	490			1.31	II	9360	41700	1	6180DA	Y	B	- TL -	841
1.74	3890	440	27900	3150	-	-	6620	29500	1	6175DB	Y		- TL -	1003
	4340	490	30000	3390	1.10	I	9360	41700	1	6180DA	Y	A	- TL -	1003
					1.35	II	9360	41700	1	6185DA	Y	B	- TL -	1003
1.40	4340	490	35900	4060	-	-	9360	41700	1	6180DA	Y		- TL -	1247
			37300	4220	1.09	I	9360	41700	1	6185DA	Y	A	- TL -	1247
1.18	4340	490	35900	4060	-	-	9360	41700	1	6180DA	Y		- TL -	1479
			44200	5000	-	-	9360	41700	1	6185DA	Y		- TL -	1479
	8670	980			1.17	I	13200	59000	1	6190DA	Y	A	- TL -	1479

Note: [1] Contact Sumitomo for dimensions.

1 HP, 0.75 kW, 60 Hz, 1750 RPM

Output Speed	Min. Preset Output Torque		Max. Preset Output Torque		Service Factor		Overhung Load		Selection[1]					
RPM	in•lb	N•m	in•lb	N•m	SF	AGMA Class	lb	N	HP Symbol	Frame Size	Shaft Spec.	AGMA Class		Ratio
0.946	8670	980	55300	6250	-	-	13200	59000	1	6190DA	Y		- TL -	1849
					1.17	I	13200	59000	1	6195DA	Y	A	- TL -	1849
0.847	8670	980	56500	6380	-	-	13200	58600	1	6190DA	Y		- TL -	2065
			61800	6980	1.05	I	13100	58400	1	6195DA	Y	A	- TL -	2065
0.690	8670	980	56500	6380	-	-	13200	58600	1	6190DA	Y		- TL -	2537
			70400	7960	-	-	13000	58100	1	6195DA	Y		- TL -	2537
	19100	2160	82300	9300	1.00	I	18900	84100	1	6205DB	Y	A	- TL -	2537
0.575	8670	980	56500	6380	-	-	13200	58900	1	6190DA	Y		- TL -	3045
			70400	7960	-	-	13100	58400	1	6195DA	Y		- TL -	3045
0.503	8670	980	56500	6380	-	-	13200	58600	1	6190DA	Y		- TL -	3481
			70400	7960	-	-	13000	58100	1	6195DA	Y		- TL -	3481
	19100	2160	82300	9300	-	-	18900	84100	1	6205DB	Y		- TL -	3481
0.394	8670	980	56500	6380	-	-	13200	58900	1	6190DA	Y		- TL -	4437
			70400	7960	-	-	13100	58400	1	6195DA	Y		- TL -	4437
	19100	2160	77500	8760	-	-	18900	84100	1	6205DB	Y		- TL -	4437
0.341	8670	980	56500	6380	-	-	13200	58900	1	6190DA	Y		- TL -	5133
			70400	7960	-	-	13100	58400	1	6195DA	Y		- TL -	5133
	19100	2160	82300	9300	-	-	18900	84100	1	6205DB	Y		- TL -	5133
0.283	8670	980	56500	6380	-	-	13200	58900	1	6190DA	Y		- TL -	6177
			70400	7960	-	-	13100	58400	1	6195DA	Y		- TL -	6177
	19100	2160	77500	8760	-	-	18900	84100	1	6205DB	Y		- TL -	6177
0.231	8670	980	56500	6380	-	-	13200	58900	1	6190DA	Y		- TL -	7569
			70400	7960	-	-	13100	58400	1	6195DA	Y		- TL -	7569
	19100	2160	77500	8760	-	-	18900	84100	1	6205DB	Y		- TL -	7569
0.189	8670	980	56500	6380	-	-	13200	59000	1	6190TD	Y		- TL -	9251
			70400	7960	-	-	13200	59000	1	6195TD	Y		- TL -	9251
	19100	2160	81700	9230	-	-	18900	84100	1	6205TD	Y		- TL -	9251
	23400	2650	108000	12200	-	-	23400	104000	1	6215TB	Y		- TL -	9251
0.160	8670	980	56500	6380	-	-	13200	59000	1	6190TD	Y		- TL -	10933
			70400	7960	-	-	13200	59000	1	6195TD	Y		- TL -	10933
	19100	2160	81700	9230	-	-	18900	84100	1	6205TD	Y		- TL -	10933
	23400	2650	101000	11400	-	-	23400	104000	1	6215TB	Y		- TL -	10933
0.128	12100	1370	56500	6380	-	-	13200	58600	1	6190TD	Y		- TL -	13629
			70400	7960	-	-	13000	58100	1	6195TD	Y		- TL -	13629
	19100	2160	82300	9300	-	-	18900	84100	1	6205TD	Y		- TL -	13629
0.108	8670	980	56500	6380	-	-	13200	59000	1	6190TD	Y		- TL -	16211
			70400	7960	-	-	13200	59000	1	6195TD	Y		- TL -	16211
	19100	2160	82300	9300	-	-	18900	84100	1	6205TD	Y		- TL -	16211
	23400	2650	112000	12700	-	-	23400	104000	1	6215TB	Y		- TL -	16211
	30300	3430	142000	16000	-	-	32600	145000	1	6225TB	Y		- TL -	16211
	39000	4410	181000	20500	-	-	40200	179000	1	6235TA	Y		- TL -	16211
0.086	23400	2650	112000	12700	-	-	23400	104000	1	6215TB	Y		- TL -	20339
	30300	3430	142000	16000	-	-	32600	145000	1	6225TB	Y		- TL -	20339
	39000	4410	181000	20500	-	-	40200	179000	1	6235TA	Y		- TL -	20339
0.073	23400	2650	112000	12700	-	-	23400	104000	1	6215TB	Y		- TL -	24037
	30300	3430	142000	16000	-	-	32600	145000	1	6225TB	Y		- TL -	24037
	39000	4410	181000	20500	-	-	40200	179000	1	6235TA	Y		- TL -	24037

Note: [1] Contact Sumitomo for dimensions.

TORQUE LIMITER GEARMOTOR SELECTION TABLES – 60 Hz

1 HP, 0.75 kW, 60 Hz, 1750 RPM (con't.)

Output Speed	Min. Preset Output Torque		Max. Preset Output Torque		Service Factor		Overhung Load		Selection[1]					
RPM	in•lb	N•m	in•lb	N•m	SF	AGMA Class	lb	N	HP Symbol	Frame Size	Shaft Spec.	AGMA Class		Ratio
0.063	30300	3430	141000	15900	-	-	32600	145000	1	6225TB	Y		- TL -	27907
	39000	4410	181000	20500	-	-	40200	179000	1	6235TA	Y		- TL -	27907
0.056	30300	3430	142000	16000	-	-	32600	145000	1	6225TB	Y		- TL -	31433
	39000	4410	181000	20500	-	-	40200	179000	1	6235TA	Y		- TL -	31433
	47800	5400	228000	25800	-	-	46700	208000	1	6245TA	Y		- TL -	31433
0.046	39000	4410	181000	20500	-	-	40200	179000	1	6235TA	Y		- TL -	38291
	47800	5400	228000	25800	-	-	46700	208000	1	6245TA	Y		- TL -	38291
	74700	8440	305000	34500	-	-	57900	258000	1	6255TA	Y		- TL -	38291
0.041	47800	5400	228000	25800	-	-	46700	208000	1	6245TA	Y		- TL -	43129
	73800	8340	305000	34500	-	-	57900	258000	1	6255TA	Y		- TL -	43129
0.033	65100	7360	305000	34500	-	-	57900	258000	1	6255TA	Y		- TL -	53621
	91100	10300	407000	46000	-	-	62000	276000	1	6265TA	Y		- TL -	53621
0.030	74700	8440	305000	34500	-	-	57900	258000	1	6255TA	Y		- TL -	59177
	126000	14200	407000	46000	-	-	62000	276000	1	6265TA	Y		- TL -	59177
0.024	126000	14200	407000	46000	-	-	62000	276000	1	6265TA	Y		- TL -	73573
0.022	91100	10300	407000	46000	-	-	62000	276000	1	6265TA	Y		- TL -	79507
	130000	14700	603000	68200	-	-	55700	248000	1	6275TA	Y		- TL -	79507
0.016	126000	14200	407000	46000	-	-	62000	276000	1	6265TA	Y		- TL -	109091
	130000	14700	603000	68200	-	-	55700	248000	1	6275TA	Y		- TL -	109091
0.012	126000	14200	407000	46000	-	-	62000	276000	1	6265TA	Y		- TL -	149683
	130000	14700	603000	68200	-	-	55700	248000	1	6275TA	Y		- TL -	149683
0.0039	91100	10300	389000	44000	-	-	62000	276000	1	6265TA	Y		- TL -	446571
	187000	21100	603000	68200	-	-	55000	245000	1	6275TA	Y		- TL -	446571
0.0027	187000	21100	389000	44000	-	-	62000	276000	1	6265TA	Y		- TL -	658503
			603000	68200	-	-	55000	245000	1	6275TA	Y		- TL -	658503

1.5 HP, 1.1 kW, 60 Hz, 1750 RPM

Output Speed	Min. Preset Output Torque		Max. Preset Output Torque		Service Factor		Overhung Load		Selection[1]					
RPM	in•lb	N•m	in•lb	N•m	SF	AGMA Class	lb	N	HP Symbol	Frame Size	Shaft Spec.	AGMA Class		Ratio
70.0	442	50	1190	135	1.15	I	1210	5400	1H	6100	Y	A	- TL -	25
60.3	442	50	1370	155	1.10	I	1210	5400	1H	6100	Y	A	- TL -	29
50.0	442	50	1640	185	1.09	I	1210	5400	1H	6105	Y	A	- TL -	35
40.7	442	50	2040	230	0.98	-	1210	5390	1H	6105	Y		- TL -	43
34.3	442	50	2430	275	1.56	II	2200	9810	1H	6120	Y	B	- TL -	51
29.7	885	100	2790	315	1.99	III	2780	12400	1H	6130	Y	C	- TL -	59
24.6	885	100	3360	380	1.66	III	2940	13100	1H	6130	Y	C	- TL -	71
20.1	885	100	4160	470	1.29	I	3170	14100	1H	6130	Y	A	- TL -	87
12.2	885	100	6240	705	1.01	I	3300	14700	1H	6130DC	Y	A	- TL -	143
					1.22	I	3300	14700	1H	6135DC	Y	A	- TL -	143
10.6	1330	150	6900	780	-	-	3300	14700	1H	6130DC	Y		- TL -	165
			7210	815	1.05	I	3300	14700	1H	6135DC	Y	A	- TL -	165
8.97	1330	150	6900	780	-	-	3300	14700	1H	6130DC	Y		- TL -	195
			8320	940	-	-	3300	14700	1H	6135DC	Y		- TL -	195
			8540	965	1.17	I	3590	16000	1H	6140DC	Y	A	- TL -	195

Note: [1] Contact Sumitomo for dimensions.

1.5 HP, 1.1 kW, 60 Hz, 1750 RPM

Output Speed	Min. Preset Output Torque		Max. Preset Output Torque		Service Factor		Overhung Load		Selection[1]					
RPM	in•lb	N•m	in•lb	N•m	SF	AGMA Class	lb	N	HP Symbol	Frame Size	Shaft Spec.	AGMA Class		Ratio
7.58	1770	200	8320	940	-	-	3300	14700	1H	6135DC	Y		- TL -	231
			10200	1150	-	-	3590	16000	1H	6140DC	Y		- TL -	231
			10200	1150	1.41	II	4960	22100	1H	6160DB	Y	B	- TL -	231
6.41	1770	200	10900	1230	-	-	3590	16000	1H	6140DC	Y		- TL -	273
			11900	1350	1.20	I	4960	22100	1H	6160DB	Y	A	- TL -	273
5.49	2210	250	10900	1230	-	-	3590	16000	1H	6140DC	Y		- TL -	319
			12100	1370	-	-	3550	15800	1H	6145DC	Y		- TL -	319
			14000	1580	1.02	I	4960	22100	1H	6160DB	Y	A	- TL -	319
4.64	2210	250	15600	1760	-	-	4960	22100	1H	6160DB	Y		- TL -	377
			16500	1870	1.03	I	4960	22100	1H	6165DB	Y	A	- TL -	377
3.70	3010	340	18600	2100	-	-	4960	22100	1H	6165DB	Y		- TL -	473
			20800	2350	-	-	6620	29500	1H	6170DB	Y		- TL -	473
			20800	2350	1.23	I	6620	29500	1H	6175DB	Y	A	- TL -	473
3.13	3010	340	18600	2100	-	-	4960	22100	1H	6165DB	Y		- TL -	559
			22400	2530	-	-	6620	29500	1H	6170DB	Y		- TL -	559
			24500	2770	1.04	I	6620	29500	1H	6175DB	Y	A	- TL -	559
2.70	3890	440	22400	2530	-	-	6620	29500	1H	6170DB	Y		- TL -	649
			27900	3150	-	-	6620	29500	1H	6175DB	Y		- TL -	649
	4340	490	28500	3220	1.15	I	9360	41700	1H	6180DA	Y	A	- TL -	649
2.39	3010	340	27900	3150	-	-	6620	29500	1H	6175DB	Y		- TL -	731
	4340	490	32100	3630	1.03	I	9360	41700	1H	6180DA	Y	A	- TL -	731
2.08	2570	290	27900	3150	-	-	6620	29500	1H	6175DB	Y		- TL -	841
	4340	490	35800	4050	-	-	9360	41700	1H	6180DA	Y		- TL -	841
			36900	4170	1.10	I	9360	41700	1H	6185DA	Y	A	- TL -	841
	8670	980	36900	4170	1.40	II	13200	59000	1H	6190DA	Y	B	- TL -	841
1.74	4340	490	35800	4050	-	-	9360	41700	1H	6180DA	Y		- TL -	1003
			44100	4980	-	-	9340	41600	1H	6185DA	Y		- TL -	1003
	8670	980	44100	4980	1.18	I	13200	59000	1H	6190DA	Y	A	- TL -	1003
1.40	4340	490	44200	5000	-	-	9360	41700	1H	6185DA	Y		- TL -	1247
	8670	980	54800	6190	-	-	13200	59000	1H	6190DA	Y		- TL -	1247
			54800	6190	1.18	I	13200	59000	1H	6195DA	Y	A	- TL -	1247
1.18	8670	980	56500	6380	-	-	13200	58900	1H	6190DA	Y		- TL -	1479
			64900	7340	1.00	I	13200	58600	1H	6195DA	Y	A	- TL -	1479
	19100	2160	64900	7340	1.10	I	18900	84100	1H	6205DB	Y	A	- TL -	1479
0.946	8670	980	70400	7960	-	-	13200	59000	1H	6195DA	Y		- TL -	1849
	19100	2160	81100	9170	-	-	18900	84100	1H	6205DB	Y		- TL -	1849
0.847	8670	980	70400	7960	-	-	13000	58100	1H	6195DA	Y		- TL -	2065
	19100	2160	82300	9300	-	-	18900	84100	1H	6205DB	Y		- TL -	2065

Note: [1] Contact Sumitomo for dimensions.

TORQUE LIMITER GEARMOTOR SELECTION TABLES – 60 Hz

2 HP, 1.5 kW, 60 Hz, 1750 RPM

Output Speed	Min. Preset Output Torque		Max. Preset Output Torque		Service Factor		Overhung Load		Selection[1]					
RPM	in•lb	N•m	in•lb	N•m	SF	AGMA Class	lb	N	HP Symbol	Frame Size	Shaft Spec.	AGMA Class		Ratio
219	442	50	521	58	1.57	II	972	4330	2	6100	Y	B	- TL -	8
159	442	50	717	81	1.57	II	1100	4920	2	6100	Y	B	- TL -	11
135	442	50	847	95	1.57	II	1150	5120	2	6100	Y	B	- TL -	13
117	442	50	973	110	1.57	II	1210	5400	2	6100	Y	B	- TL -	15
103	442	50	1110	125	1.33	II	1210	5400	2	6100	Y	B	- TL -	17
83.3	442	50	1370	155	1.56	II	1210	5400	2	6105	Y	B	- TL -	21
70.0	442	50	1590	180	1.11	I	1210	5400	2	6105	Y	A	- TL -	25
60.3	442	50	1860	210	1.06	I	1210	5400	2	6105	Y	A	- TL -	29
50.0	442	50	2260	255	1.66	III	2010	8950	2	6120	Y	C	- TL -	35
40.7	885	100	2790	315	1.99	III	2510	11200	2	6130	Y	C	- TL -	43
34.3	885	100	3320	375	1.95	III	2630	11700	2	6135	Y	C	- TL -	51
29.7	885	100	3800	430	1.46	II	2760	12300	2	6130	Y	B	- TL -	59
26.5	885	100	3940	445	1.60	III	2990	13300	2	6130DC	Y	C	- TL -	66
24.6	885	100	4600	520	1.22	I	2920	13000	2	6130	Y	A	- TL -	71
22.4	885	100	4650	525	1.36	II	3100	13800	2	6130DC	Y	B	- TL -	78
20.1	885	100	5660	640	1.27	I	3120	13900	2	6135	Y	A	- TL -	87
19.9	885	100	5260	595	1.20	I	3260	14500	2	6130DC	Y	A	- TL -	88
16.8	885	100	6190	700	1.02	I	3300	14700	2	6130DC	Y	A	- TL -	104
					1.23	I	3300	14700	2	6135DC	Y	A	- TL -	104
14.5	885	100	6900	780	-	-	3300	14700	2	6130DC	Y		- TL -	121
			7210	815	1.05	I	3300	14700	2	6135DC	Y	A	- TL -	121
	1330	150			1.07	I	3590	16000	2	6140DC	Y	A	- TL -	121
12.2	885	100	8320	940	-	-	3300	14700	2	6135DC	Y		- TL -	143
	1330	150	8540	965	1.17	I	3590	16000	2	6140DC	Y	A	- TL -	143
10.6	1330	150	8320	940	-	-	3300	14700	2	6135DC	Y		- TL -	165
			9910	1120	1.01	I	3590	16000	2	6140DC	Y	A	- TL -	165
					1.11	I	3590	16000	2	6145DC	Y	A	- TL -	165
8.97	1330	150	10900	1230	-	-	3590	16000	2	6140DC	Y		- TL -	195
			11700	1320	-	-	3590	16000	2	6145DC	Y		- TL -	195
	1770	200			1.22	I	4960	22100	2	6160DB	Y	A	- TL -	195
7.58	1770	200	13800	1560	1.04	I	4960	22100	2	6160DB	Y	A	- TL -	231
					1.24	I	4960	22100	2	6165DB	Y	A	- TL -	231
6.41	1770	200	15600	1760	-	-	4960	22100	2	6160DB	Y		- TL -	273
			16400	1850	1.04	I	4960	22100	2	6165DB	Y	A	- TL -	273
	2570	290			1.26	I	6620	29500	2	6170DB	Y	A	- TL -	273
5.49	2210	250	15600	1760	-	-	4960	22100	2	6160DB	Y		- TL -	319
			18600	2100	-	-	4960	22100	2	6165DB	Y		- TL -	319
	2570	290	19100	2160	1.08	I	6620	29500	2	6170DB	Y	A	- TL -	319
					1.34	II	6620	29500	2	6175DB	Y	B	- TL -	319
4.64	2210	250	18600	2100	-	-	4960	22100	2	6165DB	Y		- TL -	377
	2570	290	22400	2530	-	-	6620	29500	2	6170DB	Y		- TL -	377
			22600	2550	1.13	I	6620	29500	2	6175DB	Y	A	- TL -	377
3.70	3010	340	27900	3150	-	-	6620	29500	2	6175DB	Y		- TL -	473
	4340	490	28300	3200	1.17	I	9360	41700	2	6180DA	Y	A	- TL -	473
3.13	3010	340	27900	3150	-	-	6620	29500	2	6175DB	Y		- TL -	559
	4340	490	33400	3780	-	-	9360	41700	2	6180DA	Y		- TL -	559
					1.21	I	9360	41700	2	6185DA	Y	A	- TL -	559

Note: [1] Contact Sumitomo for dimensions.

2 HP, 1.5 kW, 60 Hz, 1750 RPM

Output Speed	Min. Preset Output Torque		Max. Preset Output Torque		Service Factor		Overhung Load		Selection[1]					
RPM	in•lb	N•m	in•lb	N•m	SF	AGMA Class	lb	N	HP Symbol	Frame Size	Shaft Spec.	AGMA Class		Ratio
2.70	4340	490	35800	4050	-	-	9360	41700	2	6180DA	Y		- TL -	649
			38800	4390	1.05	I	9360	41700	2	6185DA	Y	A	- TL -	649
	8670	980			1.33	II	13200	59000	2	6190DA	Y	B	- TL -	649
2.39	4340	490	35900	4060	-	-	9360	41700	2	6180DA	Y		- TL -	731
			43700	4940	-	-	9360	41700	2	6185DA	Y		- TL -	731
	8670	980			1.18	I	13200	59000	2	6190DA	Y	A	- TL -	731
2.08	4340	490	44200	5000	-	-	9360	41700	2	6185DA	Y		- TL -	841
	8670	980	50300	5690	1.03	I	13200	59000	2	6190DA	Y	A	- TL -	841
					1.28	I	13200	59000	2	6195DA	Y	A	- TL -	841
1.74	8670	980	56500	6380	-	-	13200	58600	2	6190DA	Y		- TL -	1003
			60000	6780	1.08	I	13100	58500	2	6195DA	Y	A	- TL -	1003
	19100	2160			1.26	I	18900	84100	2	6205DB	Y	A	- TL -	1003
1.40	8670	980	70400	7960	-	-	13200	59000	2	6195DA	Y		- TL -	1247
	23400	2650	74700	8440	1.38	II	23400	104000	2	6215DA	Y	B	- TL -	1247
1.18	23400	2650	88500	10000	1.03	I	23400	104000	2	6215DA	Y	A	- TL -	1479
	30300	3430			1.39	II	32600	145000	2	6225DA	Y	B	- TL -	1479
0.946	23400	2650	111000	12500	-	-	23400	104000	2	6215DA	Y		- TL -	1849
	30300	3430			1.17	I	32600	145000	2	6225DA	Y	A	- TL -	1849
0.847	23400	2650	112000	12700	-	-	23400	104000	2	6215DA	Y		- TL -	2065
	30300	3430	124000	14000	1.04	I	32600	145000	2	6225DA	Y	A	- TL -	2065
0.690	23400	2650	112000	12700	-	-	23400	104000	2	6215DA	Y		- TL -	2537
	30300	3430	141000	15900	-	-	32600	145000	2	6225DA	Y		- TL -	2537
0.575	23400	2650	100000	11300	-	-	23400	104000	2	6215DA	Y		- TL -	3045
	30300	3430	134000	15100	-	-	32600	145000	2	6225DA	Y		- TL -	3045
0.503	23400	2650	112000	12700	-	-	23400	104000	2	6215DA	Y		- TL -	3481
	30300	3430	141000	15900	-	-	32600	145000	2	6225DA	Y		- TL -	3481
0.394	23400	2650	100000	11300	-	-	23400	104000	2	6215DA	Y		- TL -	4437
	30300	3430	134000	15100	-	-	32600	145000	2	6225DA	Y		- TL -	4437
0.341	23400	2650	112000	12700	-	-	23400	104000	2	6215DA	Y		- TL -	5133
	30300	3430	141000	15900	-	-	32600	145000	2	6225DA	Y		- TL -	5133
0.283	23400	2650	100000	11300	-	-	23400	104000	2	6215DA	Y		- TL -	6177
	30300	3430	134000	15100	-	-	32600	145000	2	6225DA	Y		- TL -	6177
0.231	23400	2650	100000	11300	-	-	23400	104000	2	6215DA	Y		- TL -	7569
	30300	3430	134000	15100	-	-	32600	145000	2	6225DA	Y		- TL -	7569
0.189	30300	3430	133000	15000	-	-	32600	145000	2	6225TD	Y		- TL -	9251
	39000	4410	167000	18900	-	-	40200	179000	2	6235TA	Y		- TL -	9251
	47800	5400	196000	22200	-	-	46700	208000	2	6245TB	Y		- TL -	9251
0.160	23400	2650	112000	12700	-	-	23400	104000	2	6215TD	Y		- TL -	10933
	30300	3430	133000	15000	-	-	32600	145000	2	6225TD	Y		- TL -	10933
	39000	4410	167000	18900	-	-	40200	179000	2	6235TA	Y		- TL -	10933
	65100	7360	288000	32500	-	-	57900	258000	2	6255TB	Y		- TL -	10933
0.128	23400	2650	112000	12700	-	-	23400	104000	2	6215TB	Y		- TL -	13629
	30300	3430	141000	15900	-	-	32600	145000	2	6225TB	Y		- TL -	13629
	39000	4410	181000	20500	-	-	40200	179000	2	6235TA	Y		- TL -	13629
	47800	5400	228000	25800	-	-	46700	208000	2	6245TA	Y		- TL -	13629
	65100	7360	305000	34500	-	-	57900	258000	2	6255TA	Y		- TL -	13629

Note: [1] Contact Sumitomo for dimensions.

TORQUE LIMITER GEARMOTOR SELECTION TABLES – 60 Hz

2 HP, 1.5 kW, 60 Hz, 1750 RPM

Output Speed	Min. Preset Output Torque		Max. Preset Output Torque		Service Factor		Overhung Load		Selection[1]					
RPM	in•lb	N•m	in•lb	N•m	SF	AGMA Class	lb	N	HP Symbol	Frame Size	Shaft Spec.	AGMA Class		Ratio
0.108	47800	5400	228000	25800	-	-	46700	208000	2	6245TA	Y		- TL -	16211
	65100	7360	305000	34500	-	-	57900	258000	2	6255TA	Y		- TL -	16211
0.086	47800	5400	228000	25800	-	-	46700	208000	2	6245TA	Y		- TL -	20339
	65100	7360	305000	34500	-	-	57900	258000	2	6255TA	Y		- TL -	20339
	91100	10300	407000	46000	-	-	62000	276000	2	6265TA	Y		- TL -	20339
0.073	47800	5400	228000	25800	-	-	46700	208000	2	6245TA	Y		- TL -	24037
	65100	7360	305000	34500	-	-	57900	258000	2	6255TA	Y		- TL -	24037
	91100	10300	407000	46000	-	-	62000	276000	2	6265TA	Y		- TL -	24037
0.063	47800	5400	228000	25800	-	-	46700	208000	2	6245TA	Y		- TL -	27907
	65100	7360	305000	34500	-	-	57900	258000	2	6255TA	Y		- TL -	27907
	91100	10300	407000	46000	-	-	62000	276000	2	6265TA	Y		- TL -	27907
0.056	65100	7360	305000	34500	-	-	57900	258000	2	6255TA	Y		- TL -	31433
	91100	10300	407000	46000	-	-	62000	276000	2	6265TA	Y		- TL -	31433
	130000	14700	603000	68200	-	-	55700	248000	2	6275TA	Y		- TL -	31433
0.046	91100	10300	407000	46000	-	-	62000	276000	2	6265TA	Y		- TL -	38291
	130000	14700	603000	68200	-	-	55700	248000	2	6275TA	Y		- TL -	38291
0.041	91100	10300	407000	46000	-	-	62000	276000	2	6265TA	Y		- TL -	43129
	130000	14700	603000	68200	-	-	55700	248000	2	6275TA	Y		- TL -	43129
0.033	130000	14700	603000	68200	-	-	55700	248000	2	6275TA	Y		- TL -	53621
0.030	130000	14700	603000	68200	-	-	55700	248000	2	6275TA	Y		- TL -	59177
0.024	130000	14700	603000	68200	-	-	55700	248000	2	6275TA	Y		- TL -	73573

3 HP, 2.2 kW, 60 Hz, 1750 RPM

Output Speed	Min. Preset Output Torque		Max. Preset Output Torque		Service Factor		Overhung Load		Selection[1]					
RPM	in•lb	N•m	in•lb	N•m	SF	AGMA Class	lb	N	HP Symbol	Frame Size	Shaft Spec.	AGMA Class		Ratio
292	442	50	573	64	1.07	I	867	3860	3	6100	Y	A	- TL -	6
219	442	50	761	86	1.07	I	965	4300	3	6100	Y	A	- TL -	8
159	442	50	1020	115	1.07	I	1100	4880	3	6100	Y	A	- TL -	11
135	442	50	1240	140	1.07	I	1140	5070	3	6100	Y	A	- TL -	13
117	442	50	1420	160	1.07	I	1200	5350	3	6100	Y	A	- TL -	15
103	442	50	1590	180	1.12	I	1210	5400	3	6105	Y	A	- TL -	17
83.3	442	50	1990	225	1.06	I	1210	5400	3	6105	Y	A	- TL -	21
70.0	442	50	2390	270	1.40	II	1820	8090	3	6120	Y	B	- TL -	25
60.3	885	100	2740	310	2.04	III	2210	9860	3	6130	Y	C	- TL -	29
50.0	885	100	3320	375	1.69	III	2340	10400	3	6130	Y	C	- TL -	35
40.7	885	100	4070	460	1.71	III	2490	11100	3	6135	Y	C	- TL -	43
34.3	885	100	4870	550	1.33	II	2600	11600	3	6135	Y	B	- TL -	51
29.7	885	100	5620	635	1.15	I	2720	12100	3	6135	Y	A	- TL -	59
26.5	885	100	5800	655	1.09	I	2940	13100	3	6130DC	Y	A	- TL -	66
					1.32	II	2940	13100	3	6135DC	Y	B	- TL -	66
24.6	1770	200	6770	765	1.58	II	4960	22100	3	6160	Y	B	- TL -	71
22.4	885	100	6810	770	-	-	3050	13600	3	6130DC	Y		- TL -	78
					1.12	I	3050	13600	3	6135DC	Y	A	- TL -	78
20.1	1770	200	8270	935	1.58	II	4960	22100	3	6160	Y	B	- TL -	87

Note: [1] Contact Sumitomo for dimensions.

3 HP, 2.2 kW, 60 Hz, 1750 RPM

Output Speed	Min. Preset Output Torque		Max. Preset Output Torque		Service Factor		Overhung Load		Selection[1]					
RPM	in•lb	N•m	in•lb	N•m	SF	AGMA Class	lb	N	HP Symbol	Frame Size	Shaft Spec.	AGMA Class		Ratio
19.9	885	100	6900	780	-	-	3230	14400	3	6130DC	Y		- TL -	88
			7700	870	-	-	3210	14300	3	6135DC	Y		- TL -	88
	1330	150			1.29	I	3590	16000	3	6140DC	Y	A	- TL -	88
16.8	885	100	6900	780	-	-	3300	14700	3	6130DC	Y		- TL -	104
			8320	940	-	-	3300	14700	3	6135DC	Y		- TL -	104
	1330	150	9110	1030	1.10	I	3590	16000	3	6140DC	Y	A	- TL -	104
					1.22	I	3590	16000	3	6145DC	Y	A	- TL -	104
14.5	885	100	8320	940	-	-	3300	14700	3	6135DC	Y		- TL -	121
	1330	150	10600	1200	-	-	3590	16000	3	6140DC	Y		- TL -	121
	1770	200			1.34	II	4960	22100	3	6160DB	Y	B	- TL -	121
12.2	1330	150	10900	1230	-	-	3590	16000	3	6140DC	Y		- TL -	143
			12100	1370	-	-	3570	15900	3	6145DC	Y		- TL -	143
	1770	200	12600	1420	1.14	I	4960	22100	3	6160DB	Y	A	- TL -	143
10.6	1330	150	12000	1360	-	-	3590	16000	3	6145DC	Y		- TL -	165
	1770	200	14500	1640	-	-	4960	22100	3	6160DB	Y		- TL -	165
					1.18	I	4960	22100	3	6165DB	Y	A	- TL -	165
8.97	1770	200	15600	1760	-	-	4960	22100	3	6160DB	Y		- TL -	195
			17100	1930	-	-	4960	22100	3	6165DB	Y		- TL -	195
	2570	290			1.20	I	6620	29500	3	6170DB	Y	A	- TL -	195
7.58	1770	200	15600	1760	-	-	4960	22100	3	6160DB	Y		- TL -	231
			18600	2100	-	-	4960	22100	3	6165DB	Y		- TL -	231
	2570	290	20300	2290	1.01	I	6620	29500	3	6170DB	Y	A	- TL -	231
					1.26	I	6620	29500	3	6175DB	Y	A	- TL -	231
6.41	1770	200	18600	2100	-	-	4960	22100	3	6165DB	Y		- TL -	273
	2570	290	22400	2530	-	-	6620	29500	3	6170DB	Y		- TL -	273
			24000	2710	1.07	I	6620	29500	3	6175DB	Y	A	- TL -	273
	4340	490			1.37	II	9360	41700	3	6180DA	Y	B	- TL -	273
5.49	2570	290	22400	2530	-	-	6620	29500	3	6170DB	Y		- TL -	319
			27900	3150	-	-	6620	29500	3	6175DB	Y		- TL -	319
	4340	490	28000	3160	1.17	I	9360	41700	3	6180DA	Y	A	- TL -	319
4.64	2570	290	27900	3150	-	-	6620	29500	3	6175DB	Y		- TL -	377
	4340	490	33100	3740	-	-	9360	41700	3	6180DA	Y		- TL -	377
					1.23	I	9360	41700	3	6185DA	Y	A	- TL -	377
3.70	4340	490	35900	4060	-	-	9360	41700	3	6180DA	Y		- TL -	473
			41500	4690	0.98	-	9360	41700	3	6185DA	Y		- TL -	473
	8670	980			1.25	I	13200	59000	3	6190DA	Y	A	- TL -	473
3.13	4340	490	44200	5000	-	-	9360	41700	3	6185DA	Y		- TL -	559
	8670	980	49100	5550	1.06	I	13200	59000	3	6190DA	Y	A	- TL -	559
2.70	4340	490	44200	5000	-	-	9340	41600	3	6185DA	Y		- TL -	649
	8670	980	56500	6380	-	-	13200	58600	3	6190DA	Y		- TL -	649
			57000	6440	1.14	I	13200	58600	3	6195DA	Y	A	- TL -	649
2.39	8670	980	56500	6380	-	-	13200	59000	3	6190DA	Y		- TL -	731
			64100	7250	1.01	I	13200	59000	3	6195DA	Y	A	- TL -	731
2.08	8670	980	56500	6380	-	-	13200	59000	3	6190DA	Y		- TL -	841
			70400	7960	-	-	13200	59000	3	6195DB	Y		- TL -	841
	19100	2160	73800	8340	1.02	I	18900	84100	3	6205DB	Y	A	- TL -	841
	23400	2650			1.39	II	23400	104000	3	6215DA	Y	B	- TL -	841

Note: [1] Contact Sumitomo for dimensions.

TORQUE LIMITER GEARMOTOR SELECTION TABLES – 60 Hz

3 HP, 2.2 kW, 60 Hz, 1750 RPM (con't.)

Output Speed	Min. Preset Output Torque		Max. Preset Output Torque		Service Factor		Overhung Load		Selection[1]					
RPM	in•lb	N•m	in•lb	N•m	SF	AGMA Class	lb	N	HP Symbol	Frame Size	Shaft Spec.	AGMA Class		Ratio
1.74	8670	980	70400	7960	-	-	13000	58100	3	6195DA	Y		- TL -	1003
	19100	2160	82300	9300	-	-	18900	84100	3	6205DB	Y		- TL -	1003
	23400	2650	88000	9950	1.17	I	23400	104000	3	6215DA	Y	A	- TL -	1003
1.40	19100	2160	82300	9300	-	-	18900	84100	3	6205DB	Y		- TL -	1247
	23400	2650	110000	12400	-	-	23400	104000	3	6215DA	Y		- TL -	1247
	30300	3430			1.19	I	32600	145000	3	6225DA	Y	A	- TL -	1247
1.18	23400	2650	100000	11300	-	-	23400	104000	3	6215DA	Y		- TL -	1479
	30300	3430	130000	14700	-	-	32600	145000	3	6225DA	Y		- TL -	1479
	42600	4810			1.07	I	40200	179000	3	6235DA	Y	A	- TL -	1479
0.946	30300	3430	142000	16000	-	-	32600	145000	3	6225DA	Y		- TL -	1849
	39000	4410	162000	18300	1.03	I	40200	179000	3	6235DA	Y	A	- TL -	1849
	47800	5400			1.29	I	46700	208000	3	6245DA	Y	A	- TL -	1849
0.847	30300	3430	141000	15900	-	-	32600	145000	3	6225DA	Y		- TL -	2065
	39000	4410	181000	20500	-	-	40200	179000	3	6235DA	Y		- TL -	2065
	47800	5400			1.16	I	46700	208000	3	6245DA	Y	A	- TL -	2065
0.690	39000	4410	181000	20500	-	-	40200	179000	3	6235DA	Y		- TL -	2537
	47800	5400	223000	25200	-	-	46700	208000	3	6245DA	Y		- TL -	2537
0.575	43400	4910	152000	17200	-	-	40200	179000	3	6235DA	Y		- TL -	3045
			200000	22600	-	-	46700	208000	3	6245DA	Y		- TL -	3045
0.503	39000	4410	181000	20500	-	-	40200	179000	3	6235DA	Y		- TL -	3481
	47800	5400	228000	25800	-	-	46700	208000	3	6245DA	Y		- TL -	3481
0.394	43400	4910	152000	17200	-	-	40200	179000	3	6235DA	Y		- TL -	4437
	47800	5400	200000	22600	-	-	46700	208000	3	6245DA	Y		- TL -	4437
0.341	39000	4410	181000	20500	-	-	40200	179000	3	6235DA	Y		- TL -	5133
	47800	5400	228000	25800	-	-	46700	208000	3	6245DA	Y		- TL -	5133
0.283	44200	5000	152000	17200	-	-	40200	179000	3	6235DA	Y		- TL -	6177
	47800	5400	200000	22600	-	-	46700	208000	3	6245DA	Y		- TL -	6177
0.231	44200	5000	152000	17200	-	-	40200	179000	3	6235DA	Y		- TL -	7569
	47800	5400	200000	22600	-	-	46700	208000	3	6245DA	Y		- TL -	7569
0.189	65100	7360	288000	32500	-	-	57900	258000	3	6255TB	Y		- TL -	9251
0.160	86800	9810	407000	46000	-	-	62000	276000	3	6265TA	Y		- TL -	10933
0.128	121000	13700	407000	46000	-	-	62000	276000	3	6265TA	Y		- TL -	13629
0.108	91100	10300	407000	46000	-	-	62000	276000	3	6265TA	Y		- TL -	16211
0.086	130000	14700	603000	68200	-	-	55700	248000	3	6275TA	Y		- TL -	20339
0.073	130000	14700	603000	68200	-	-	55700	248000	3	6275TA	Y		- TL -	24037
0.063	130000	14700	603000	68200	-	-	55700	248000	3	6275TA	Y		- TL -	27907

5 HP, 3.7 kW, 60 Hz, 1750 RPM

Output Speed	Min. Preset Output Torque		Max. Preset Output Torque		Service Factor		Overhung Load		Selection[1]					
RPM	in•lb	N•m	in•lb	N•m	SF	AGMA Class	lb	N	HP Symbol	Frame Size	Shaft Spec.	AGMA Class		Ratio
292	442	50	929	105	1.37	II	1100	4910	5	6120	Y	B	- TL -	6
219	442	50	1280	145	1.37	II	1230	5480	5	6120	Y	B	- TL -	8
159	442	50	1770	200	1.37	II	1390	6210	5	6120	Y	B	- TL -	11
135	442	50	2080	235	1.37	II	1440	6410	5	6120	Y	B	- TL -	13
117	442	50	2390	270	1.37	II	1540	6870	5	6120	Y	B	- TL -	15
103	885	100	2700	305	1.96	III	1870	8350	5	6130	Y	C	- TL -	17

Note: [1] Contact Sumitomo for dimensions.

5 HP, 3.7 kW, 60 Hz, 1750 RPM

Output Speed	Min. Preset Output Torque		Max. Preset Output Torque		Service Factor		Overhung Load		Selection[1]					
RPM	in•lb	N•m	in•lb	N•m	SF	AGMA Class	lb	N	HP Symbol	Frame Size	Shaft Spec.	AGMA Class		Ratio
83.3	885	100	3360	380	1.66	III	2000	8920	5	6130	Y	C	- TL -	21
70.0	885	100	3980	450	1.61	III	2080	9250	5	6135	Y	C	- TL -	25
60.3	885	100	4650	525	1.21	I	2180	9720	5	6130	Y	A	- TL -	29
50.0	885	100	5620	635	1.15	I	2290	10200	5	6135	Y	A	- TL -	35
40.7	1770	200	6900	780	2.01	III	4310	19200	5	6160	Y	C	- TL -	43
34.3	1770	200	8180	925	1.55	II	4470	19900	5	6160	Y	B	- TL -	51
29.7	1770	200	9470	1070	1.19	I	4960	22100	5	6160	Y	A	- TL -	59
26.5	1770	200	9730	1100	1.47	II	4960	22100	5	6160DC	Y	B	- TL -	66
22.4	1770	200	11500	1300	1.24	I	4960	22100	5	6160DC	Y	A	- TL -	78
19.9	1770	200	13000	1470	1.31	II	4960	22100	5	6165DC	Y	B	- TL -	88
16.8	1770	200	15100	1710	-	-	4960	22100	5	6160DB	Y		- TL -	104
14.5	1770	200	17600	1990	-	-	4960	22100	5	6165DB	Y		- TL -	121
12.2	2570	290	20900	2360	-	-	6620	29500	5	6170DB	Y		- TL -	143
10.6	2570	290	22400	2530	-	-	6620	29500	5	6170DB	Y		- TL -	165
	4340	490	24300	2750	1.35	II	9360	41700	5	6180DB	Y	B	- TL -	165
8.97	2570	290	27900	3150	-	-	6620	29500	5	6175DC	Y		- TL -	195
	4340	490	28800	3250	1.15	I	9360	41700	5	6180DB	Y	A	- TL -	195
7.58	4340	490	33700	3810	-	-	9360	41700	5	6180DA	Y		- TL -	231
6.41	4340	490	40300	4560	1.01	I	9360	41700	5	6185DB	Y	A	- TL -	273
5.49	4340	490	44200	5000	-	-	9360	41700	5	6185DA	Y		- TL -	319
4.64	8670	980	55700	6290	-	-	13200	59000	5	6190DA	Y		- TL -	377
					1.16	I	13200	59000	5	6195DB	Y	A	- TL -	377
3.70	8670	980	69800	7890	-	-	13200	59000	5	6195DA	Y		- TL -	473
	19100	2160			1.08	I	18900	84100	5	6205DB	Y	A	- TL -	473
3.13	19100	2160	82300	9300	-	-	18900	84100	5	6205DB	Y		- TL -	559
	23400	2650	82600	9330	1.25	I	23400	104000	5	6215DA	Y	A	- TL -	559
2.70	23400	2650	95600	10800	1.07	I	23400	104000	5	6215DA	Y	A	- TL -	649
	30300	3430			1.35	II	32600	145000	5	6225DA	Y	B	- TL -	649
2.39	23400	2650	108000	12200	-	-	23400	104000	5	6215DA	Y		- TL -	731
	30300	3430			1.20	I	32600	145000	5	6225DA	Y	A	- TL -	731
2.08	23400	2650	112000	12700	-	-	23400	104000	5	6215DA	Y		- TL -	841
	30300	3430	124000	14000	0.98	-	32600	145000	5	6225DA	Y		- TL -	841
	39000	4410			1.24	I	40200	179000	5	6235DA	Y	A	- TL -	841
1.74	30300	3430	141000	15900	-	-	32600	145000	5	6225DA	Y		- TL -	1003
	39000	4410	148000	16700	1.12	I	40200	179000	5	6235DA	Y	A	- TL -	1003
1.40	39000	4410	181000	20500	-	-	40200	179000	5	6235DA	Y		- TL -	1247
	47800	5400	184000	20800	1.14	I	46700	208000	5	6245DA	Y	A	- TL -	1247
1.18	47800	5400	200000	22600	-	-	46700	208000	5	6245DA	Y		- TL -	1479
	109000	12300	219000	24700	1.15	I	57900	258000	5	6255DA	Y	A	- TL -	1479
0.946	65100	7360	273000	30900	1.03	I	57900	258000	5	6255DA	Y	A	- TL -	1849
0.847	73800	8340	305000	34500	-	-	57900	258000	5	6255DA	Y		- TL -	2065
0.690	73800	8340	305000	34500	-	-	57900	258000	5	6255DA	Y		- TL -	2537
0.575	109000	12300	274000	31000	-	-	57900	258000	5	6255DA	Y		- TL -	3045
0.503	74700	8440	305000	34500	-	-	57900	258000	5	6255DA	Y		- TL -	3481
0.394	113000	12800	274000	31000	-	-	57900	258000	5	6255DA	Y		- TL -	4437
0.341	126000	14200	305000	34500	-	-	57900	258000	5	6255DA	Y		- TL -	5133
0.283	187000	21100	274000	31000	-	-	57900	258000	5	6255DB	Y		- TL -	6177
0.189	86800	9810	407000	46000	-	-	62000	276000	5	6265TA	Y		- TL -	9251
0.160	130000	14700	603000	68200	-	-	55700	248000	5	6275TA	Y		- TL -	10933
0.128	130000	14700	603000	68200	-	-	55700	248000	5	6275TA	Y		- TL -	13629
0.108	130000	14700	603000	68200	-	-	55700	248000	5	6275TA	Y		- TL -	16211

Note: [1] Contact Sumitomo for dimensions.

TORQUE LIMITER GEARMOTOR SELECTION TABLES – 60 Hz

7.5 HP, 5.5 kW, 60 Hz, 1750 RPM

Output Speed	Min. Preset Output Torque		Max. Preset Output Torque		Service Factor		Overhung Load		Selection[1]					
RPM	in•lb	N•m	in•lb	N•m	SF	AGMA Class	lb	N	HP Symbol	Frame Size	Shaft Spec.	AGMA Class		Ratio
292	442	50	1420	160	1.06	I	1090	4860	8	6125	Y	A	- TL -	6
219	442	50	1900	215	1.26	I	1210	5410	8	6125	Y	A	- TL -	8
159	885	100	2610	295	1.71	III	1630	7260	8	6130	Y	C	- TL -	11
135	885	100	3100	350	1.71	III	1700	7550	8	6130	Y	C	- TL -	13
117	885	100	3580	405	1.41	II	1730	7690	8	6130	Y	B	- TL -	15
103	885	100	4030	455	1.51	II	1850	8250	8	6135	Y	B	- TL -	17
83.3	885	100	5000	565	1.37	II	1970	8780	8	6135	Y	B	- TL -	21
70.0	1770	200	5970	675	1.79	III	3610	16100	8	6160	Y	C	- TL -	25
60.3	1770	200	6900	780	1.91	III	3770	16800	8	6160	Y	C	- TL -	29
50.0	1770	200	8360	945	1.76	III	4000	17800	8	6160	Y	C	- TL -	35
40.7	1770	200	10300	1160	1.35	II	4270	19000	8	6160	Y	B	- TL -	43
	2570	290			1.77	III	4830	21500	8	6170	Y	C	- TL -	43
34.3	2570	290	12200	1380	1.53	II	5030	22400	8	6170	Y	B	- TL -	51
29.7	2570	290	14100	1590	1.51	II	5280	23500	8	6175	Y	B	- TL -	59
26.5	1770	200	14500	1640	0.99	-	4960	22100	8	6160DC	Y		- TL -	66
					1.18	I	4960	22100	8	6165DC	Y	A	- TL -	66
22.4	1770	200	15600	1760	-	-	4960	22100	8	6160DC	Y		- TL -	78
			17100	1930	1.00	I	4960	22100	8	6165DC	Y	A	- TL -	78
					1.20	I	5880	26200	8	6170DC	Y	A	- TL -	78
19.9	1770	200	15600	1760	-	-	4960	22100	8	6160DC	Y		- TL -	88
			18600	2100	-	-	4960	22100	8	6165DC	Y		- TL -	88
	2570	290	19300	2180	1.06	I	6170	27500	8	6170DC	Y	A	- TL -	88
	4340	490			1.71	III	8260	36800	8	6180DB	Y	C	- TL -	88
16.8	1770	200	18600	2100	-	-	4960	22100	8	6165DC	Y		- TL -	104
	2570	290	22400	2530	0.90	-	6420	28600	8	6170DC	Y		- TL -	104
			22800	2580	1.12	I	6420	28600	8	6175DC	Y	A	- TL -	104
	4340	490			1.45	II	8600	38300	8	6180DB	Y	B	- TL -	104
14.5	2570	290	21800	2460	-	-	6620	29500	8	6170DC	Y		- TL -	121
	4340	490	26500	3000	1.24	I	9140	40700	8	6180DB	Y	A	- TL -	121
12.2	2570	290	25700	2900	-	-	6620	29500	8	6175DC	Y		- TL -	143
	4340	490	31400	3550	1.05	I	9360	41700	8	6180DB	Y	A	- TL -	143
					1.27	I	9360	41700	8	6185DB	Y	A	- TL -	143
10.6	2570	290	27900	3150	-	-	6620	29500	8	6175DC	Y		- TL -	165
	4340	490	35900	4060	0.91	-	9360	41700	8	6180DB	Y		- TL -	165
			36200	4090	1.10	I	9360	41700	8	6185DB	Y	A	- TL -	165
8.97	4340	490	35900	4060	-	-	9360	41700	8	6180DB	Y		- TL -	195
			42800	4840	0.93	-	9360	41700	8	6185DB	Y		- TL -	195
	8670	980			1.21	I	13200	59000	8	6190DB	Y	A	- TL -	195
7.58	4340	490	44200	5000	-	-	9360	41700	8	6185DB	Y		- TL -	231
	8670	980	50700	5730	1.02	I	13200	59000	8	6190DB	Y	A	- TL -	231
					1.28	I	13200	59000	8	6195DB	Y	A	- TL -	231
6.41	8670	980	56500	6380	-	-	13200	59000	8	6190DB	Y		- TL -	273
			59900	6770	1.08	I	13200	59000	8	6195DB	Y	A	- TL -	273
5.49	8670	980	56500	6380	-	-	13200	59000	8	6190DA	Y		- TL -	319
	8670	980	70000	7910	0.92	-	13200	59000	8	6195DB	Y		- TL -	319
	19100	2160			1.07	I	18900	84100	8	6205DB	Y	A	- TL -	319
	23400	2650			1.47	II	23400	104000	8	6215DA	Y	B	- TL -	319

Note: [1] Contact Sumitomo for dimensions.

7.5 HP, 5.5 kW, 60 Hz, 1750 RPM

Output Speed	Min. Preset Output Torque		Max. Preset Output Torque		Service Factor		Overhung Load		Selection[1]					
RPM	in•lb	N•m	in•lb	N•m	SF	AGMA Class	lb	N	HP Symbol	Frame Size	Shaft Spec.	AGMA Class		Ratio
4.64	8670	980	70400	7960	-	-	13200	59000	8	6195DB	Y		- TL -	377
	19100	2160	81700	9230	0.91	-	18900	84100	8	6205DB	Y		- TL -	377
	23400	2650	82700	9350	1.24	I	23400	104000	8	6215DA	Y	A	- TL -	377
3.70	19100	2160	82300	9300	-	-	18900	84100	8	6205DB	Y		- TL -	473
	23400	2650	104000	11700	0.98	-	23400	104000	8	6215DA	Y		- TL -	473
	30300	3430			1.25	I	32600	145000	8	6225DA	Y	A	- TL -	473
3.13	23400	2650	112000	12700	-	-	23400	104000	8	6215DA	Y		- TL -	559
	30300	3430	123000	13900	1.06	I	32600	145000	8	6225DA	Y	A	- TL -	559
	39000	4410			1.36	II	40200	179000	8	6235DA	Y	B	- TL -	559
2.70	23400	2650	112000	12700	-	-	23400	104000	8	6215DA	Y		- TL -	649
	30300	3430	141000	15900	0.91	-	32600	145000	8	6225DA	Y		- TL -	649
	39000	4410	142000	16100	1.17	I	40200	179000	8	6235DA	Y	A	- TL -	649
2.39	30300	3430	142000	16000	-	-	32600	145000	8	6225DA	Y		- TL -	731
	39000	4410	160000	18100	1.04	I	40200	179000	8	6235DA	Y	A	- TL -	731
	47800	5400			1.31	II	46700	208000	8	6245DA	Y	B	- TL -	731
2.08	39000	4410	167000	18900	-	-	40200	179000	8	6235DA	Y		- TL -	841
	47800	5400	185000	20900	1.14	I	46700	208000	8	6245DA	Y	A	- TL -	841
1.74	39000	4410	181000	20500	-	-	40200	179000	8	6235DA	Y		- TL -	1003
	47800	5400	220000	24900	0.95	-	46700	208000	8	6245DA	Y		- TL -	1003
	71100	8040			1.27	I	57900	258000	8	6255DA	Y	A	- TL -	1003
1.40	47800	5400	228000	25800	-	-	46700	208000	8	6245DA	Y		- TL -	1247
	65100	7360	273000	30900	1.02	I	57900	258000	8	6255DA	Y	A	- TL -	1247
	91100	10300			1.37	II	62000	276000	8	6265DA	Y	B	- TL -	1247
1.18	109000	12300	274000	31000	-	-	57900	258000	8	6255DA	Y		- TL -	1479
	178000	20100	325000	36700	1.10	I	62000	276000	8	6265DA	Y	A	- TL -	1479
0.946	65100	7360	305000	34500	-	-	57900	258000	8	6255DA	Y		- TL -	1849
	91100	10300	406000	45900	0.92	-	62000	276000	8	6265DA	Y		- TL -	1849
	130000	14700			1.37	II	55700	248000	8	6275DA	Y	B	- TL -	1849
0.847	126000	14200	407000	46000	-	-	62000	276000	8	6265DA	Y		- TL -	2065
	130000	14700	453000	51200	1.22	I	55700	248000	8	6275DA	Y	A	- TL -	2065
0.690	126000	14200	407000	46000	-	I	62000	276000	8	6265DA	Y		- TL -	2537
	130000	14700	557000	62900	1.00	I	55700	248000	8	6275DA	Y	A	- TL -	2537
0.575	130000	14700	389000	44000	-	-	62000	276000	8	6265DA	Y		- TL -	3045
	130000	14700	603000	68200	-	-	55000	245000	8	6275DA	Y		- TL -	3045
0.503	126000	14200	407000	46000	-	-	62000	276000	8	6265DA	Y		- TL -	3481
	130000	14700	603000	68200	-	-	55700	248000	8	6275DA	Y		- TL -	3481
0.394	182000	20600	389000	44000	-	-	62000	276000	8	6265DA	Y		- TL -	4437
	182000	20600	603000	68200	-	-	55000	245000	8	6275DA	Y		- TL -	4437
0.341	126000	14200	407000	46000	-	-	62000	276000	8	6265DA	Y		- TL -	5133
	182000	20600	603000	68200	-	-	55000	245000	8	6275DA	Y		- TL -	5133
0.283	187000	21100	389000	44000	-	-	62000	276000	8	6265DA	Y		- TL -	6177
	187000	21100	603000	68200	-	-	55000	245000	8	6275DA	Y		- TL -	6177
0.231	187000	21100	389000	44000	-	-	62000	276000	8	6265DA	Y		- TL -	7569
	187000	21100	603000	68200	-	-	55000	245000	8	6275DA	Y		- TL -	7569
0.189	130000	14700	603000	68200	-	-	55700	248000	8	6275TA	Y		- TL -	9251

Note: [1] Contact Sumitomo for dimensions.

TORQUE LIMITER GEARMOTOR SELECTION TABLES – 60 Hz

10 HP, 7.5 kW, 60 Hz, 1750 RPM

Output Speed	Min. Preset Output Torque		Max. Preset Output Torque		Service Factor		Overhung Load		Selection[1]					
RPM	in•lb	N•m	in•lb	N•m	SF	AGMA Class	lb	N	HP Symbol	Frame Size	Shaft Spec.	AGMA Class		Ratio
292	885	100	1950	220	1.25	I	1270	5660	10	6130	Y	A	- TL -	6
219	885	100	2570	290	1.25	I	1410	6300	10	6130	Y	A	- TL -	8
159	885	100	3580	405	1.25	I	1610	7170	10	6130	Y	A	- TL -	11
135	885	100	4200	475	1.25	I	1670	7450	10	6130	Y	A	- TL -	13
117	885	100	4870	550	1.20	I	1700	7590	10	6135	Y	A	- TL -	15
103	885	100	5530	625	1.11	I	1830	8130	10	6135	Y	A	- TL -	17
	1770	200			1.75	III	3210	14300	10	6160	Y	C	- TL -	17
83.3	1770	200	6810	770	1.72	III	3440	15300	10	6160	Y	C	- TL -	21
70.0	1770	200	8140	920	1.31	II	3590	16000	10	6160	Y	B	- TL -	25
60.3	1770	200	9470	1070	1.52	II	3730	16600	10	6165	Y	B	- TL -	29
50.0	2570	290	11400	1290	1.60	III	4490	20000	10	6170	Y	C	- TL -	35
40.7	2570	290	14000	1580	1.51	II	4780	21300	10	6175	Y	B	- TL -	43
34.3	2570	290	16600	1880	1.12	I	4980	22200	10	6170	Y	A	- TL -	51
	4340	490			1.60	III	6710	29900	10	6180	Y	C	- TL -	51
29.7	4340	490	19200	2170	1.30	II	7030	31300	10	6180	Y	B	- TL -	59
26.5	4340	490	19700	2230	1.67	III	7480	33300	10	6180DB	Y	C	- TL -	66
22.4	4340	490	23400	2640	1.41	II	7770	34600	10	6180DB	Y	B	- TL -	78
19.9	4340	490	26400	2980	1.25	I	8200	36500	10	6180DB	Y	A	- TL -	88
16.8	4340	490	31100	3520	1.06	I	8510	37900	10	6180DB	Y	A	- TL -	104
	4340	490			1.28	I	8510	37900	10	6185DB	Y	A	- TL -	104
14.5	4340	490	35900	4060	0.91	-	9050	40300	10	6180DB	Y		- TL -	121
	4340	490	36200	4090	1.08	I	9050	40300	10	6185DB	Y	A	- TL -	121
	8670	980			1.43	II	12700	56700	10	6190DB	Y	B	- TL -	121
12.2	4340	490	35900	4060	-	-	9360	41700	10	6180DB	Y		- TL -	143
	4340	490	42800	4840	0.93	-	9360	41700	10	6185DB	Y		- TL -	143
	8670	980			1.21	I	13200	58900	10	6190DB	Y	A	- TL -	143
10.6	4340	490	43500	4920	-	-	9360	41700	10	6185DB	Y		- TL -	165
	8670	980	49400	5580	1.05	I	13200	59000	10	6190DB	Y	A	- TL -	165
	8670	980			1.30	II	13200	59000	10	6195DB	Y	B	- TL -	165
8.97	8670	980	56500	6380	-	-	13200	58900	10	6190DB	Y		- TL -	195
	8670	980	58400	6600	1.10	I	13200	58800	10	6195DB	Y	A	- TL -	195
7.58	8670	980	56500	6380	-	-	13200	59000	10	6190DB	Y		- TL -	231
	8670	980	69100	7810	0.93	-	13200	59000	10	6195DB	Y		- TL -	231
	19100	2160			1.09	I	18900	84100	10	6205DB	Y	A	- TL -	231
	23400	2650			1.47	II	23400	104000	10	6215DA	Y	B	- TL -	231
6.41	8670	980	70400	7960	-	-	13200	59000	10	6195DB	Y		- TL -	273
	19100	2160	81700	9230	0.92	-	18900	84100	10	6205DB	Y		- TL -	273
	23400	2650			1.24	I	23400	104000	10	6215DA	Y	A	- TL -	273
					1.24	I	23400	104000	10	6215DB	Y	A	- TL -	273
5.49	19100	2160	81700	9230	-	-	18900	84100	10	6205DB	Y		- TL -	319
	23400	2650	95600	10800	1.08	I	23400	104000	10	6215DA	Y	A	- TL -	319
	30300	3430			1.28	I	32100	143000	10	6225DA	Y	A	- TL -	319
4.64	23400	2650	112000	12700	0.91	-	23400	104000	10	6215DA	Y		- TL -	377
	36500	4120	113000	12800	1.08	I	32600	145000	10	6225DA	Y	A	- TL -	377
	39000	4410			1.36	II	40200	179000	10	6235DA	Y	B	- TL -	377
3.70	30300	3430	142000	16000	0.92	-	32600	145000	10	6225DA	Y		- TL -	473
	39000	4410			1.18	I	40200	179000	10	6235DA	Y	A	- TL -	473

Note: [1] Contact Sumitomo for dimensions.

10 HP, 7.5 kW, 60 Hz, 1750 RPM

Output Speed	Min. Preset Output Torque		Max. Preset Output Torque		Service Factor		Overhung Load		Selection[1]					
RPM	in•lb	N•m	in•lb	N•m	SF	AGMA Class	lb	N	HP Symbol	Frame Size	Shaft Spec.	AGMA Class		Ratio
3.13	30300	3430	142000	16000	-	-	32600	145000	10	6225DA	Y		- TL -	559
	39000	4410	167000	18900	1.00	I	40200	179000	10	6235DA	Y	A	- TL -	559
	47800	5400			1.25	I	46700	208000	10	6245DA	Y	A	- TL -	559
2.70	39000	4410	181000	20500	-	-	40200	179000	10	6235DA	Y		- TL -	649
	47800	5400	195000	22000	1.08	I	46700	208000	10	6245DA	Y	A	- TL -	649
	73800	8340			1.44	II	57900	258000	10	6255DA	Y	B	- TL -	649
2.39	39000	4410	181000	20500	-	-	40200	179000	10	6235DA	Y		- TL -	731
	47800	5400	219000	24700	0.96	-	46700	208000	10	6245DA	Y		- TL -	731
	65100	7360			1.28	I	57900	258000	10	6255DA	Y	A	- TL -	731
2.08	47800	5400	228000	25800	-	-	46700	208000	10	6245DA	Y		- TL -	841
	73800	8340	251000	28400	1.05	I	57900	258000	10	6255DA	Y	A	- TL -	841
	86800	9810			1.48	II	62000	276000	10	6265DA	Y	B	- TL -	841
1.74	71100	8040	300000	33900	0.93	-	57900	258000	10	6255DA	Y		- TL -	1003
	121000	13700			1.25	I	62000	276000	10	6265DA	Y	A	- TL -	1003
1.40	65100	7360	305000	34500	-	-	57900	258000	10	6255DA	Y		- TL -	1247
	91100	10300	373000	42200	1.00	I	62000	276000	10	6265DA	Y	A	- TL -	1247
	130000	14700			1.48	II	55700	248000	10	6275DA	Y	B	- TL -	1247
1.18	178000	20100	389000	44000	-	-	62000	276000	10	6265DA	Y		- TL -	1479
	178000	20100	442000	50000	1.25	I	55700	248000	10	6275DA	Y	A	- TL -	1479
0.946	130000	14700	553000	62500	1.00	I	55700	248000	10	6275DA	Y	A	- TL -	1849
0.847	130000	14700	603000	68200	0.90	-	55700	248000	10	6275DA	Y		- TL -	2065

15 HP, 11 kW, 60 Hz, 1750 RPM

Output Speed	Min. Preset Output Torque		Max. Preset Output Torque		Service Factor		Overhung Load		Selection[1]					
RPM	in•lb	N•m	in•lb	N•m	SF	AGMA Class	lb	N	HP Symbol	Frame Size	Shaft Spec.	AGMA Class		Ratio
40.7	8670	980	20500	2320	1.90	III	9000	40100	15	6190	Y	C	- TL -	43
34.3	8670	980	24300	2750	1.65	III	9410	41900	15	6190	Y	C	- TL -	51
29.7	8670	980	28200	3190	1.39	II	9830	43800	15	6190	Y	B	- TL -	59
2.70	126000	14200	285000	32200	1.31	II	62000	276000	15	6265DA	Y	B	- TL -	649
2.39	95600	10800	321000	36300	1.16	I	62000	276000	15	6265DA	Y	A	- TL -	731
2.08	86800	9810	369000	41700	1.01	I	62000	276000	15	6265DA	Y	A	- TL -	841
2.08	130000	14700			1.50	II	55700	248000	15	6275DA	Y	B	- TL -	841
1.74	121000	13700	407000	46000	-	-	62000	276000	15	6265DA	Y		- TL -	1003
	130000	14700	441000	49800	1.26	I	55700	248000	15	6275DA	Y	A	- TL -	1003
1.40	130000	14700	548000	61900	1.01	I	55700	248000	15	6275DA	Y	A	- TL -	1247
1.18	178000	20100	603000	68200	-	-	55000	245000	15	6275DA	Y		- TL -	1479

Note: [1] Contact Sumitomo for dimensions.

TORQUE LIMITER GEARMOTOR SELECTION TABLES – 60 Hz

20 HP, 15 kW, 60 Hz, 1750 RPM

Output Speed	Min. Preset Output Torque		Max. Preset Output Torque		Service Factor		Overhung Load		Selection[1]					
RPM	in•lb	N•m	in•lb	N•m	SF	AGMA Class	lb	N	HP Symbol	Frame Size	Shaft Spec.	AGMA Class		Ratio
50.0	8670	980	22800	2580	1.62	III	8330	37100	20	6190	Y	C	- TL -	35
40.7	8670	980	28000	3170	1.39	II	8960	39900	20	6190	Y	B	- TL -	43
3.70	91100	10300	283000	32000	1.32	II	62000	276000	20	6265DA	Y	B	- TL -	473
3.13	130000	14700	334000	37800	1.12	I	62000	276000	20	6265DA	Y	A	- TL -	559
2.70	126000	14200	388000	43900	0.96	-	62000	276000	20	6265DA	Y		- TL -	649
	130000	14700			1.43	II	55700	248000	20	6275DA	Y	B	- TL -	649
2.39	95600	10800	407000	46000	-	-	62000	276000	20	6265DA	Y		- TL -	731
	130000	14700	437000	49400	1.27	I	55700	248000	20	6275DA	Y	A	- TL -	731
2.08	86800	9810	407000	46000	-	-	62000	276000	20	6265DA	Y		- TL -	841
	130000	14700	503000	56900	1.10	I	55700	248000	20	6275DA	Y	A	- TL -	841
1.74	130000	14700	600000	67800	0.92	-	55700	248000	20	6275DA	Y		- TL -	1003

25 HP, 18.5 kW, 60 Hz, 1750 RPM

Output Speed	Min. Preset Output Torque		Max. Preset Output Torque		Service Factor		Overhung Load		Selection[1]					
RPM	in•lb	N•m	in•lb	N•m	SF	AGMA Class	lb	N	HP Symbol	Frame Size	Shaft Spec.	AGMA Class		Ratio
70.0	8670	980	20100	2270	1.90	III	7500	33400	25	6190	Y	C	- TL -	25
60.3	8670	980	23300	2630	1.66	III	7880	35100	25	6190	Y	C	- TL -	29
50.0	8670	980	28100	3180	1.31	II	8310	37000	25	6190	Y	B	- TL -	35
4.64	86800	9810	279000	31500	1.34	II	62000	276000	25	6265DA	Y	B	- TL -	377
3.70	91100	10300	349000	39500	1.07	I	62000	276000	25	6265DA	Y	A	- TL -	473
3.13	130000	14700	407000	46000	0.91	-	62000	276000	25	6265DA	Y		- TL -	559
	130000	14700	412000	46600	1.34	II	55700	248000	25	6275DA	Y	B	- TL -	559
2.70	130000	14700	479000	54100	1.16	I	55700	248000	25	6275DA	Y	A	- TL -	649
2.39	130000	14700	540000	61000	1.03	I	55700	248000	25	6275DA	Y	A	- TL -	731
2.08	130000	14700	603000	68200	-	-	55700	248000	25	6275DA	Y		- TL -	841

30 HP, 22 kW, 60 Hz, 1750 RPM

Output Speed	Min. Preset Output Torque		Max. Preset Output Torque		Service Factor		Overhung Load		Selection[1]					
RPM	in•lb	N•m	in•lb	N•m	SF	AGMA Class	lb	N	HP Symbol	Frame Size	Shaft Spec.	AGMA Class		Ratio
83.3	8670	980	20100	2270	1.86	III	7140	31800	30	6190	Y	C	- TL -	21
70.0	8670	980	23900	2700	1.60	III	7480	33300	30	6190	Y	C	- TL -	25
60.3	8670	980	27700	3130	1.40	II	7840	34900	30	6190	Y	B	- TL -	29
6.41	86800	9810	240000	27100	1.56	II	62000	276000	30	6265DA	Y	B	- TL -	273
5.49	86800	9810	280000	31600	1.33	II	62000	276000	30	6265DA	Y	B	- TL -	319
4.64	86800	9810	331000	37400	1.13	I	62000	276000	30	6265DA	Y	A	- TL -	377
3.70	91100	10300	407000	46000	0.90	-	62000	276000	30	6265DA	Y		- TL -	473
	130000	14700	415000	46900	1.33	II	55700	248000	30	6275DA	Y	B	- TL -	473
3.13	130000	14700	491000	55500	1.13	I	55700	248000	30	6275DA	Y	A	- TL -	559
2.70	130000	14700	570000	64400	0.97	-	55700	248000	30	6275DA	Y		- TL -	649
2.39	130000	14700	603000	68200	-	-	55700	248000	30	6275DA	Y		- TL -	731

Note: [1] Contact Sumitomo for dimensions.

40 HP, 30 kW, 60 Hz, 1750 RPM

Output Speed	Min. Preset Output Torque		Max. Preset Output Torque		Service Factor		Overhung Load		Selection[1]					
RPM	in•lb	N•m	in•lb	N•m	SF	AGMA Class	lb	N	HP Symbol	Frame Size	Shaft Spec.	AGMA Class		Ratio
135	8670	980	16900	1910	1.60	III	5970	26600	40	6195	Y	C	- TL -	13
117	8670	980	19600	2210	1.60	III	6260	27900	40	6195	Y	C	- TL -	15
103	8670	980	22100	2500	1.60	III	6600	29400	40	6195	Y	C	- TL -	17
14.5	65100	7360	145000	16400	1.54	II	40900	182000	40	6255DB	Y	B	- TL -	121
10.6	65100	7360	197000	22300	1.28	I	44000	196000	40	6255DB	Y	A	- TL -	165
8.97	65100	7360	234000	26400	1.09	I	46000	205000	40	6255DB	Y	A	- TL -	195
7.58	86800	9810	277000	31300	1.35	II	59900	267000	40	6265DA	Y	B	- TL -	231
5.49	86800	9810	382000	43200	0.98	-	62000	276000	40	6265DA	Y		- TL -	319
	130000	14700			1.45	II	55700	248000	40	6275DA	Y	B	- TL -	319
4.64	86800	9810	407000	46000	-	-	62000	276000	40	6265DA	Y		- TL -	377
	130000	14700	451000	51000	1.23	I	55700	248000	40	6275DA	Y	A	- TL -	377
3.70	130000	14700	566000	64000	0.98	-	55700	248000	40	6275DA	Y		- TL -	473

Note: [1] Contact Sumitomo for dimensions.

TORQUE LIMITER GEARMOTOR SELECTION TABLES – 50 Hz

1/4 HP, 0.2 kW, 50 Hz, 1450 RPM

Output Speed	Min. Preset Output Torque		Max. Preset Output Torque		Service Factor		Overhung Load		Selection[1]					
RPM	in•lb	N•m	in•lb	N•m	SF	AGMA Class	lb	N	HP Symbol	Frame Size	Shaft Spec.	AGMA Class		Ratio
0.157	2210	250	6900	780	-	-	3300	14700	02	6130TC	Y		- TL -	9251
			8320	940	-	-	3300	14700	02	6135TC	Y		- TL -	9251
			10900	1230	-	-	3590	16000	02	6140TC	Y		- TL -	9251
			12100	1370	-	-	3550	15800	02	6145TC	Y		- TL -	9251
			15600	1760	-	-	4960	22100	02	6160TB	Y		- TL -	9251
			18600	2100	-	-	4960	22100	02	6165TB	Y		- TL -	9251
0.133	2210	250	6900	780	-	-	3300	14700	02	6130TC	Y		- TL -	10933
			8320	940	-	-	3300	14700	02	6135TC	Y		- TL -	10933
			10900	1230	-	-	3590	16000	02	6140TC	Y		- TL -	10933
			12100	1370	-	-	3550	15800	02	6145TC	Y		- TL -	10933
			15600	1760	-	-	4960	22100	02	6160TB	Y		- TL -	10933
			18600	2100	-	-	4960	22100	02	6165TB	Y		- TL -	10933
0.106	3890	440	8050	910	-	-	3300	14700	02	6130TC	Y		- TL -	13629
			9290	1050	-	-	3300	14700	02	6135TC	Y		- TL -	13629
			10900	1230	-	-	3590	16000	02	6140TC	Y		- TL -	13629
			12100	1370	-	-	3590	16000	02	6145TC	Y		- TL -	13629
			15600	1760	-	-	4960	22100	02	6160TB	Y		- TL -	13629
			18600	2100	-	-	4960	22100	02	6165TB	Y		- TL -	13629
0.089	3010	340	6900	780	-	-	3300	14700	02	6130TC	Y		- TL -	16211
			8320	940	-	-	3300	14700	02	6135TC	Y		- TL -	16211
			10900	1230	-	-	3590	16000	02	6140TC	Y		- TL -	16211
			12100	1370	-	-	3530	15700	02	6145TC	Y		- TL -	16211
			15400	1740	-	-	4960	22100	02	6160TB	Y		- TL -	16211
			18600	2100	-	-	4960	22100	02	6165TB	Y		- TL -	16211
0.071	3010	340	6900	780	-	-	3300	14700	02	6130TC	Y		- TL -	20339
			8320	940	-	-	3300	14700	02	6135TC	Y		- TL -	20339
			10900	1230	-	-	3590	16000	02	6140TC	Y		- TL -	20339
			12100	1370	-	-	3530	15700	02	6145TC	Y		- TL -	20339
			15400	1740	-	-	4960	22100	02	6160TB	Y		- TL -	20339
			18600	2100	-	-	4960	22100	02	6165TB	Y		- TL -	20339
			22400	2530	-	-	6620	29500	02	6170TB	Y		- TL -	20339
			27900	3150	-	-	6620	29500	02	6175TB	Y		- TL -	20339
0.060	3010	340	6900	780	-	-	3300	14700	02	6130TC	Y		- TL -	24037
			8320	940	-	-	3300	14700	02	6135TC	Y		- TL -	24037
			10900	1230	-	-	3590	16000	02	6140TC	Y		- TL -	24037
			12100	1370	-	-	3530	15700	02	6145TC	Y		- TL -	24037
			15400	1740	-	-	4960	22100	02	6160TB	Y		- TL -	24037
			18600	2100	-	-	4960	22100	02	6165TB	Y		- TL -	24037
			22400	2530	-	-	6620	29500	02	6170TB	Y		- TL -	24037
			27900	3150	-	-	6620	29500	02	6175TB	Y		- TL -	24037
	4340	490	35900	4060	-	-	9360	41700	02	6180TA	Y		- TL -	24037
			44200	5000	-	-	9360	41700	02	6185TA	Y		- TL -	24037

Note: [1] Contact Sumitomo for dimensions.

1/4 HP, 0.2 kW, 50 Hz, 1450 RPM

Output Speed	Min. Preset Output Torque		Max. Preset Output Torque		Service Factor		Overhung Load		Selection[1]					
RPM	in•lb	N•m	in•lb	N•m	SF	AGMA Class	lb	N	HP Symbol	Frame Size	Shaft Spec.	AGMA Class		Ratio
0.052	3010	340	8050	910	-	-	3300	14700	02	6130TC	Y		- TL -	27907
			9290	1050	-	-	3300	14700	02	6135TC	Y		- TL -	27907
			10900	1230	-	-	3590	16000	02	6140TC	Y		- TL -	27907
			12100	1370	-	-	3590	16000	02	6145TC	Y		- TL -	27907
			15600	1760	-	-	4960	22100	02	6160TB	Y		- TL -	27907
			18600	2100	-	-	4960	22100	02	6165TB	Y		- TL -	27907
			22400	2530	-	-	6620	29500	02	6170TB	Y		- TL -	27907
			27900	3150	-	-	6620	29500	02	6175TB	Y		- TL -	27907
	4340	490	35800	4050	-	-	9360	41700	02	6180TA	Y		- TL -	27907
			44200	5000	-	-	9340	41600	02	6185TA	Y		- TL -	27907
0.046	3010	340	6900	780	-	-	3300	14700	02	6130TC	Y		- TL -	31433
			8320	940	-	-	3300	14700	02	6135TC	Y		- TL -	31433
			10900	1230	-	-	3590	16000	02	6140TC	Y		- TL -	31433
			12100	1370	-	-	3530	15700	02	6145TC	Y		- TL -	31433
			15400	1740	-	-	4960	22100	02	6160TB	Y		- TL -	31433
			18600	2100	-	-	4960	22100	02	6165TB	Y		- TL -	31433
			22400	2530	-	-	6620	29500	02	6170TB	Y		- TL -	31433
			27900	3150	-	-	6620	29500	02	6175TB	Y		- TL -	31433
	4340	490	35900	4060	-	-	9360	41700	02	6180TA	Y		- TL -	31433
			44200	5000	-	-	9360	41700	02	6185TA	Y		- TL -	31433
0.038	3010	340	8050	910	-	-	3300	14700	02	6130TC	Y		- TL -	38291
			9290	1050	-	-	3300	14700	02	6135TC	Y		- TL -	38291
			10900	1230	-	-	3590	16000	02	6140TC	Y		- TL -	38291
			12100	1370	-	-	3590	16000	02	6145TC	Y		- TL -	38291
			15600	1760	-	-	4960	22100	02	6160TB	Y		- TL -	38291
			18600	2100	-	-	4960	22100	02	6165TB	Y		- TL -	38291
			22400	2530	-	-	6620	29500	02	6170TB	Y		- TL -	38291
			27900	3150	-	-	6620	29500	02	6175TB	Y		- TL -	38291
	4340	490	35800	4050	-	-	9360	41700	02	6180TA	Y		- TL -	38291
			44200	5000	-	-	9340	41600	02	6185TA	Y		- TL -	38291
0.034	3010	340	8050	910	-	-	3300	14700	02	6130TC	Y		- TL -	43129
			9290	1050	-	-	3300	14700	02	6135TC	Y		- TL -	43129
			10900	1230	-	-	3590	16000	02	6140TC	Y		- TL -	43129
			12100	1370	-	-	3590	16000	02	6145TC	Y		- TL -	43129
			15600	1760	-	-	4960	22100	02	6160TB	Y		- TL -	43129
			18600	2100	-	-	4960	22100	02	6165TB	Y		- TL -	43129
			22400	2530	-	-	6620	29500	02	6170TB	Y		- TL -	43129
			27900	3150	-	-	6620	29500	02	6175TB	Y		- TL -	43129
	4340	490	35800	4050	-	-	9360	41700	02	6180TA	Y		- TL -	43129
			44200	5000	-	-	9340	41600	02	6185TA	Y		- TL -	43129
0.027	3010	340	6900	780	-	-	3300	14700	02	6130TC	Y		- TL -	53621
			8320	940	-	-	3300	14700	02	6135TC	Y		- TL -	53621
			10900	1230	-	-	3590	16000	02	6140TC	Y		- TL -	53621
			12100	1370	-	-	3530	15700	02	6145TC	Y		- TL -	53621
			15400	1740	-	-	4960	22100	02	6160TB	Y		- TL -	53621
			18600	2100	-	-	4960	22100	02	6165TB	Y		- TL -	53621
			22400	2530	-	-	6620	29500	02	6170TB	Y		- TL -	53621
			27900	3150	-	-	6620	29500	02	6175TB	Y		- TL -	53621
	4340	490	35900	4060	-	-	9360	41700	02	6180TA	Y		- TL -	53621
			44200	5000	-	-	9360	41700	02	6185TA	Y		- TL -	53621

Note: [1] Contact Sumitomo for dimensions.

TORQUE LIMITER GEARMOTOR SELECTION TABLES – 50 Hz

1/4 HP, 0.2 kW, 50 Hz, 1450 RPM (con't.)

Output Speed	Min. Preset Output Torque		Max. Preset Output Torque		Service Factor		Overhung Load		Selection[1]					
RPM	in•lb	N•m	in•lb	N•m	SF	AGMA Class	lb	N	HP Symbol	Frame Size	Shaft Spec.	AGMA Class		Ratio
0.025	3010	340	8050	910	-	-	3300	14700	02	6130TC	Y		- TL -	59177
			9290	1050	-	-	3300	14700	02	6135TC	Y		- TL -	59177
			10900	1230	-	-	3590	16000	02	6140TC	Y		- TL -	59177
			12100	1370	-	-	3590	16000	02	6145TC	Y		- TL -	59177
			15600	1760	-	-	4960	22100	02	6160TB	Y		- TL -	59177
			18600	2100	-	-	4960	22100	02	6165TB	Y		- TL -	59177
			22400	2530	-	-	6620	29500	02	6170TB	Y		- TL -	59177
			27900	3150	-	-	6620	29500	02	6175TB	Y		- TL -	59177
	4340	490	35800	4050	-	-	9360	41700	02	6180TA	Y		- TL -	59177
			44200	5000	-	-	9340	41600	02	6185TA	Y		- TL -	59177
0.020	3010	340	8050	910	-	-	3300	14700	02	6130TC	Y		- TL -	73573
			9290	1050	-	-	3300	14700	02	6135TC	Y		- TL -	73573
			10900	1230	-	-	3590	16000	02	6140TC	Y		- TL -	73573
			12100	1370	-	-	3590	16000	02	6145TC	Y		- TL -	73573
			15600	1760	-	-	4960	22100	02	6160TB	Y		- TL -	73573
			18600	2100	-	-	4960	22100	02	6165TB	Y		- TL -	73573
			22400	2530	-	-	6620	29500	02	6170TB	Y		- TL -	73573
			27900	3150	-	-	6620	29500	02	6175TB	Y		- TL -	73573
	4340	490	35800	4050	-	-	9360	41700	02	6180TA	Y		- TL -	73573
			44200	5000	-	-	9340	41600	02	6185TA	Y		- TL -	73573
0.018	3010	340	6900	780	-	-	3300	14700	02	6130TC	Y		- TL -	79507
			8320	940	-	-	3300	14700	02	6135TC	Y		- TL -	79507
			10900	1230	-	-	3590	16000	02	6140TC	Y		- TL -	79507
			12100	1370	-	-	3530	15700	02	6145TC	Y		- TL -	79507
			15400	1740	-	-	4960	22100	02	6160TB	Y		- TL -	79507
			18600	2100	-	-	4960	22100	02	6165TB	Y		- TL -	79507
			22400	2530	-	-	6620	29500	02	6170TB	Y		- TL -	79507
			27900	3150	-	-	6620	29500	02	6175TB	Y		- TL -	79507
	4340	490	35900	4060	-	-	9360	41700	02	6180TA	Y		- TL -	79507
			44200	5000	-	-	9360	41700	02	6185TA	Y		- TL -	79507
	8670	980	56500	6380	-	-	13200	59000	02	6190TA	Y		- TL -	79507
			70400	7960	-	-	13200	59000	02	6195TA	Y		- TL -	79507
	19100	2160	82300	9300	-	-	18900	84100	02	6205TD	Y		- TL -	79507
0.013	3010	340	8050	910	-	-	3300	14700	02	6130TC	Y		- TL -	109091
			9290	1050	-	-	3300	14700	02	6135TC	Y		- TL -	109091
			10900	1230	-	-	3590	16000	02	6140TC	Y		- TL -	109091
			12100	1370	-	-	3590	16000	02	6145TC	Y		- TL -	109091
			15600	1760	-	-	4960	22100	02	6160TB	Y		- TL -	109091
			18600	2100	-	-	4960	22100	02	6165TB	Y		- TL -	109091
			22400	2530	-	-	6620	29500	02	6170TB	Y		- TL -	109091
			27900	3150	-	-	6620	29500	02	6175TB	Y		- TL -	109091
	4340	490	35800	4050	-	-	9360	41700	02	6180TA	Y		- TL -	109091
			44200	5000	-	-	9340	41600	02	6185TA	Y		- TL -	109091
	8670	980	56500	6380	-	-	13200	58600	02	6190TA	Y		- TL -	109091
			70400	7960	-	-	13000	58100	02	6195TA	Y		- TL -	109091
	19100	2160	82300	9300	-	-	18900	84100	02	6205TD	Y		- TL -	109091
	23400	2650	112000	12700	-	-	23400	104000	02	6215TB	Y		- TL -	109091

Note: [1] Contact Sumitomo for dimensions.

1/4 HP, 0.2 kW, 50 Hz, 1450 RPM

Output Speed	Min. Preset Output Torque		Max. Preset Output Torque		Service Factor		Overhung Load		Selection[1]					
RPM	in•lb	N•m	in•lb	N•m	SF	AGMA Class	lb	N	HP Symbol	Frame Size	Shaft Spec.	AGMA Class		Ratio
0.010	3010	340	8050	910	-	-	3300	14700	02	6130TC	Y		- TL -	149683
			9290	1050	-	-	3300	14700	02	6135TC	Y		- TL -	149683
			10900	1230	-	-	3590	16000	02	6140TC	Y		- TL -	149683
			12100	1370	-	-	3590	16000	02	6145TC	Y		- TL -	149683
			15600	1760	-	-	4960	22100	02	6160TB	Y		- TL -	149683
			18600	2100	-	-	4960	22100	02	6165TB	Y		- TL -	149683
			22400	2530	-	-	6620	29500	02	6170TB	Y		- TL -	149683
			27900	3150	-	-	6620	29500	02	6175TB	Y		- TL -	149683
	4340	490	35800	4050	-	-	9360	41700	02	6180TA	Y		- TL -	149683
			44200	5000	-	-	9340	41600	02	6185TA	Y		- TL -	149683
	8670	980	56500	6380	-	-	13200	58600	02	6190TA	Y		- TL -	149683
			70400	7960	-	-	13000	58100	02	6195TA	Y		- TL -	149683
	19100	2160	82300	9300	-	-	18900	84100	02	6205TD	Y		- TL -	149683
	23400	2650	112000	12700	-	-	23400	104000	02	6215TB	Y		- TL -	149683
0.0032	3010	340	7480	845	-	-	3300	14700	02	6130TC	Y		- TL -	446571
			8630	975	-	-	3300	14700	02	6135TC	Y		- TL -	446571
			10900	1230	-	-	3590	16000	02	6140TC	Y		- TL -	446571
			15600	1760	-	-	4960	22100	02	6160TB	Y		- TL -	446571
			18100	2050	-	-	4890	21800	02	6165TB	Y		- TL -	446571
			22400	2530	-	-	6620	29500	02	6170TB	Y		- TL -	446571
			27900	3150	-	-	6620	29500	02	6175TB	Y		- TL -	446571
	4780	540	35900	4060	-	-	9360	41700	02	6180TA	Y		- TL -	446571
			44200	5000	-	-	9360	41700	02	6185TA	Y		- TL -	446571
	8670	980	56500	6380	-	-	13200	58900	02	6190TA	Y		- TL -	446571
			70400	7960	-	-	13100	58400	02	6195TA	Y		- TL -	446571
	23400	2650	100000	11300	-	-	23400	104000	02	6215TB	Y		- TL -	446571
0.0022	17300	1960	35900	4060	-	-	9360	41700	02	6180TC	Y		- TL -	658503
			44200	5000	-	-	9360	41700	02	6185TC	Y		- TL -	658503
			56500	6380	-	-	13200	58900	02	6190TD	Y		- TL -	658503
			70400	7960	-	-	13100	58400	02	6195TD	Y		- TL -	658503
	23400	2650	100000	11300	-	-	23400	104000	02	6215TB	Y		- TL -	658503

Note: [1] Contact Sumitomo for dimensions.

TORQUE LIMITER GEARMOTOR SELECTION TABLES – 50 Hz

1/2 HP, 0.4 kW, 50 Hz, 1450 RPM

Output Speed	Min. Preset Output Torque		Max. Preset Output Torque		Service Factor		Overhung Load		Selection[1]					
RPM	in•lb	N•m	in•lb	N•m	SF	AGMA Class	lb	N	HP Symbol	Frame Size	Shaft Spec.	AGMA Class		Ratio
28.4	442	50	1060	120	1.40	II	1210	5400	05	6100	Y	B	- TL -	51
24.6	442	50	1190	135	1.29	I	1210	5400	05	6100	Y	A	- TL -	59
20.4	442	50	1460	165	1.27	I	1210	5400	05	6105	Y	A	- TL -	71
16.7	442	50	1810	205	1.26	I	1210	5400	05	6105	Y	A	- TL -	87
5.31	1770	200	5220	590	1.21	I	3300	14700	05	6130DC	Y	A	- TL -	273
4.55	2210	250	6110	690	1.03	I	3300	14700	05	6130DC	Y	A	- TL -	319
3.85	2210	250	6900	780	-	-	3300	14700	05	6130DC	Y		- TL -	377
			7210	815	1.05	I	3300	14700	05	6135DC	Y	A	- TL -	377
3.07	3010	340	6900	780	-	-	3300	14700	05	6130DC	Y		- TL -	473
			8320	940	0.84	-	3300	14700	05	6135DC	Y		- TL -	473
			9020	1020	1.10	I	3590	16000	05	6140DC	Y	A	- TL -	473
2.59	3010	340	6900	780	-	-	3300	14700	05	6130DC	Y		- TL -	559
			8320	940	-	-	3300	14700	05	6135DC	Y		- TL -	559
			10700	1210	0.92	-	3590	16000	05	6140DC	Y		- TL -	559
2.23	3890	440	8050	910	-	-	3300	14700	05	6130DC	Y		- TL -	649
			9290	1050	-	-	3300	14700	05	6135DC	Y		- TL -	649
			10900	1230	-	-	3590	16000	05	6140DC	Y		- TL -	649
			12100	1370	0.89	-	3590	16000	05	6145DC	Y		- TL -	649
			12400	1400	1.14	I	4960	22100	05	6160DB	Y		- TL -	649
1.98	3010	340	6900	780	-	-	3300	14700	05	6130DC	Y		- TL -	731
			8320	940	-	-	3300	14700	05	6135DC	Y		- TL -	731
			10900	1230	-	-	3590	16000	05	6140DC	Y		- TL -	731
			12100	1370	-	-	3530	15700	05	6145DC	Y		- TL -	731
			14000	1580	1.01	I	4960	22100	05	6160DB	Y	A	- TL -	731
1.72	2210	250	6900	780	-	-	3300	14700	05	6130DC	Y		- TL -	841
			8320	940	-	-	3300	14700	05	6135DC	Y		- TL -	841
			10900	1230	-	-	3590	16000	05	6140DC	Y		- TL -	841
			12100	1370	-	-	3550	15800	05	6145DC	Y		- TL -	841
			15600	1760	-	-	4960	22100	05	6160DB	Y		- TL -	841
			16100	1820	1.05	I	4960	22100	05	6165DB	Y	A	- TL -	841
1.45	3890	440	8050	910	-	-	3300	14700	05	6130DC	Y		- TL -	1003
			9290	1050	-	-	3300	14700	05	6135DC	Y		- TL -	1003
			10900	1230	-	-	3590	16000	05	6140DC	Y		- TL -	1003
			12100	1370	-	-	3590	16000	05	6145DC	Y		- TL -	1003
			15600	1760	-	-	4960	22100	05	6160DB	Y		- TL -	1003
			18600	2100	0.88	-	4960	22100	05	6165DB	Y		- TL -	1003
			19200	2170	1.06	I	6620	29500	05	6170DB	Y	A	- TL -	1003
1.16	3010	340	6900	780	-	-	3300	14700	05	6130DC	Y		- TL -	1247
			8320	940	-	-	3300	14700	05	6135DC	Y		- TL -	1247
			10900	1230	-	-	3590	16000	05	6140DC	Y		- TL -	1247
			12100	1370	-	-	3530	15700	05	6145DC	Y		- TL -	1247
			15400	1740	-	-	4960	22100	05	6160DB	Y		- TL -	1247
			18600	2100	-	-	4960	22100	05	6165DB	Y		- TL -	1247
			22400	2530	-	-	6620	29500	05	6170DB	Y		- TL -	1247
			23900	2700	1.07	I	6620	29500	05	6175DB	Y	A	- TL -	1247

Note: [1] Contact Sumitomo for dimensions.

1/2 HP, 0.4 kW, 50 Hz, 1450 RPM

Output Speed	Min. Preset Output Torque		Max. Preset Output Torque		Service Factor		Overhung Load		Selection[1]					
RPM	in•lb	N•m	in•lb	N•m	SF	AGMA Class	lb	N	HP Symbol	Frame Size	Shaft Spec.	AGMA Class		Ratio
0.980	4340	490	7480	845	-	-	3300	14700	05	6130DC	Y		- TL -	1479
			8630	975	-	-	3300	14700	05	6135DC	Y		- TL -	1479
			10900	1230	-	-	3590	16000	05	6140DC	Y		- TL -	1479
			15600	1760	-	-	4960	22100	05	6160DB	Y		- TL -	1479
			18100	2050	-	-	4890	21800	05	6165DB	Y		- TL -	1479
			22400	2530	-	-	6620	29500	05	6170DB	Y		- TL -	1479
			27900	3150	0.90	-	6620	29500	05	6175DB	Y		- TL -	1479
0.784	3010	340	6900	780	-	-	3300	14700	05	6130DC	Y		- TL -	1849
			8320	940	-	-	3300	14700	05	6135DC	Y		- TL -	1849
			10900	1230	-	-	3590	16000	05	6140DC	Y		- TL -	1849
			12100	1370	-	-	3530	15700	05	6145DC	Y		- TL -	1849
			15400	1740	-	-	4960	22100	05	6160DB	Y		- TL -	1849
			18600	2100	-	-	4960	22100	05	6165DB	Y		- TL -	1849
			22400	2530	-	-	6620	29500	05	6170DB	Y		- TL -	1849
			27900	3150	-	-	6620	29500	05	6175DB	Y		- TL -	1849
	4340	490	35400	4000	-	-	9360	41700	05	6180DA	Y		- TL -	1849
0.702	4340	490	8050	910	-	-	3300	14700	05	6130DC	Y		- TL -	2065
			9290	1050	-	-	3300	14700	05	6135DC	Y		- TL -	2065
			10900	1230	-	-	3590	16000	05	6140DC	Y		- TL -	2065
			12100	1370	-	-	3590	16000	05	6145DC	Y		- TL -	2065
			15600	1760	-	-	4960	22100	05	6160DB	Y		- TL -	2065
			18600	2100	-	-	4960	22100	05	6165DB	Y		- TL -	2065
			22400	2530	-	-	6620	29500	05	6170DB	Y		- TL -	2065
			27900	3150	-	-	6620	29500	05	6175DB	Y		- TL -	2065
			35800	4050	-	-	9360	41700	05	6180DA	Y		- TL -	2065
			39600	4470	1.02	I	9360	41700	05	6185DA	Y	A	- TL -	2065
0.572	4340	490	8050	910	-	-	3300	14700	05	6130DC	Y		- TL -	2537
			9290	1050	-	-	3300	14700	05	6135DC	Y		- TL -	2537
			10900	1230	-	-	3590	16000	05	6140DC	Y		- TL -	2537
			12100	1370	-	-	3590	16000	05	6145DC	Y		- TL -	2537
			15600	1760	-	-	4960	22100	05	6160DB	Y		- TL -	2537
			18600	2100	-	-	4960	22100	05	6165DB	Y		- TL -	2537
			22400	2530	-	-	6620	29500	05	6170DB	Y		- TL -	2537
			27900	3150	-	-	6620	29500	05	6175DB	Y		- TL -	2537
			35800	4050	-	-	9360	41700	05	6180DA	Y		- TL -	2537
			44200	5000	0.83	-	9340	41600	05	6185DA	Y		- TL -	2537
0.476	4340	490	7480	845	-	-	3300	14700	05	6130DC	Y		- TL -	3045
			8630	975	-	-	3300	14700	05	6135DC	Y		- TL -	3045
			10900	1230	-	-	3590	16000	05	6140DC	Y		- TL -	3045
			15600	1760	-	-	4960	22100	05	6160DB	Y		- TL -	3045
			18100	2050	-	-	4890	21800	05	6165DB	Y		- TL -	3045
			22400	2530	-	-	6620	29500	05	6170DB	Y		- TL -	3045
			27900	3150	-	-	6620	29500	05	6175DB	Y		- TL -	3045
			35900	4060	-	-	9360	41700	05	6180DA	Y		- TL -	3045
			44200	5000	-	-	9360	41700	05	6185DA	Y		- TL -	3045

Note: [1] Contact Sumitomo for dimensions.

TORQUE LIMITER GEARMOTOR SELECTION TABLES – 50 Hz

1/2 HP, 0.4 kW, 50 Hz, 1450 RPM (con't.)

Output Speed	Min. Preset Output Torque		Max. Preset Output Torque		Service Factor		Overhung Load		Selection[1]					
RPM	in•lb	N•m	in•lb	N•m	SF	AGMA Class	lb	N	HP Symbol	Frame Size	Shaft Spec.	AGMA Class		Ratio
0.417	4340	490	8050	910	-	-	3300	14700	05	6130DC	Y		- TL -	3481
			9290	1050	-	-	3300	14700	05	6135DC	Y		- TL -	3481
			10900	1230	-	-	3590	16000	05	6140DC	Y		- TL -	3481
			12100	1370	-	-	3590	16000	05	6145DC	Y		- TL -	3481
			15600	1760	-	-	4960	22100	05	6160DB	Y		- TL -	3481
			18600	2100	-	-	4960	22100	05	6165DB	Y		- TL -	3481
			22400	2530	-	-	6620	29500	05	6170DB	Y		- TL -	3481
			27900	3150	-	-	6620	29500	05	6175DB	Y		- TL -	3481
			35800	4050	-	-	9360	41700	05	6180DA	Y		- TL -	3481
			44200	5000	-	-	9340	41600	05	6185DA	Y		- TL -	3481
0.327	4780	540	7480	845	-	-	3300	14700	05	6130DC	Y		- TL -	4437
			8630	975	-	-	3300	14700	05	6135DC	Y		- TL -	4437
			10900	1230	-	-	3590	16000	05	6140DC	Y		- TL -	4437
			15600	1760	-	-	4960	22100	05	6160DB	Y		- TL -	4437
			18100	2050	-	-	4890	21800	05	6165DB	Y		- TL -	4437
			22400	2530	-	-	6620	29500	05	6170DB	Y		- TL -	4437
			27900	3150	-	-	6620	29500	05	6175DB	Y		- TL -	4437
			35900	4060	-	-	9360	41700	05	6180DA	Y		- TL -	4437
			44200	5000	-	-	9360	41700	05	6185DA	Y		- TL -	4437
0.282	4780	540	7480	845	-	-	3300	14700	05	6130DC	Y		- TL -	5133
			8630	975	-	-	3300	14700	05	6135DC	Y		- TL -	5133
			10900	1230	-	-	3590	16000	05	6140DC	Y		- TL -	5133
			15600	1760	-	-	4960	22100	05	6160DB	Y		- TL -	5133
			18100	2050	-	-	4890	21800	05	6165DB	Y		- TL -	5133
			22400	2530	-	-	6620	29500	05	6170DB	Y		- TL -	5133
			27900	3150	-	-	6620	29500	05	6175DB	Y		- TL -	5133
			35900	4060	-	-	9360	41700	05	6180DA	Y		- TL -	5133
			44200	5000	-	-	9360	41700	05	6185DA	Y		- TL -	5133
0.235	4780	540	7480	845	-	-	3300	14700	05	6130DC	Y		- TL -	6177
			8630	975	-	-	3300	14700	05	6135DC	Y		- TL -	6177
			10900	1230	-	-	3590	16000	05	6140DC	Y		- TL -	6177
			15600	1760	-	-	4960	22100	05	6160DB	Y		- TL -	6177
			18100	2050	-	-	4890	21800	05	6165DB	Y		- TL -	6177
			22400	2530	-	-	6620	29500	05	6170DB	Y		- TL -	6177
			27900	3150	-	-	6620	29500	05	6175DB	Y		- TL -	6177
			35900	4060	-	-	9360	41700	05	6180DA	Y		- TL -	6177
			44200	5000	-	-	9360	41700	05	6185DA	Y		- TL -	6177
0.192	4780	540	7480	845	-	-	3300	14700	05	6130DC	Y		- TL -	7569
			8630	975	-	-	3300	14700	05	6135DC	Y		- TL -	7569
			10900	1230	-	-	3590	16000	05	6140DC	Y		- TL -	7569
			15600	1760	-	-	4960	22100	05	6160DB	Y		- TL -	7569
			18100	2050	-	-	4890	21800	05	6165DB	Y		- TL -	7569
			22400	2530	-	-	6620	29500	05	6170DB	Y		- TL -	7569
			27900	3150	-	-	6620	29500	05	6175DB	Y		- TL -	7569
			35900	4060	-	-	9360	41700	05	6180DA	Y		- TL -	7569
			44200	5000	-	-	9360	41700	05	6185DA	Y		- TL -	7569

Note: [1] Contact Sumitomo for dimensions.

1/2 HP, 0.4 kW, 50 Hz, 1450 RPM

Output Speed	Min. Preset Output Torque		Max. Preset Output Torque		Service Factor		Overhung Load		Selection[1]					
RPM	in•lb	N•m	in•lb	N•m	SF	AGMA Class	lb	N	HP Symbol	Frame Size	Shaft Spec.	AGMA Class		Ratio
0.157	2570	290	22400	2530	-	-	6620	29500	05	6170TB	Y		- TL -	9251
			27900	3150	-	-	6620	29500	05	6175TB	Y		- TL -	9251
	4340	490	35800	4050	-	-	9360	41700	05	6180TA	Y		- TL -	9251
			41600	4700	-	-	9360	41700	05	6185TA	Y		- TL -	9251
0.133	2570	290	22400	2530	-	-	6620	29500	05	6170TB	Y		- TL -	10933
			27900	3150	-	-	6620	29500	05	6175TB	Y		- TL -	10933
	4340	490	35800	4050	-	-	9360	41700	05	6180TA	Y		- TL -	10933
			44200	5000	-	-	9360	41700	05	6185TC	Y		- TL -	10933
0.106	3890	440	22400	2530	-	-	6620	29500	05	6170TB	Y		- TL -	13629
			27900	3150	-	-	6620	29500	05	6175TB	Y		- TL -	13629
	4340	490	35800	4050	-	-	9360	41700	05	6180TA	Y		- TL -	13629
			44200	5000	-	-	9340	41600	05	6185TA	Y		- TL -	13629
0.089	3010	340	22400	2530	-	-	6620	29500	05	6170TB	Y		- TL -	16211
			27900	3150	-	-	6620	29500	05	6175TB	Y		- TL -	16211
	4340	490	35900	4060	-	-	9360	41700	05	6180TA	Y		- TL -	16211
			44200	5000	-	-	9360	41700	05	6185TA	Y		- TL -	16211
0.071	4340	490	35900	4060	-	-	9360	41700	05	6180TA	Y		- TL -	20339
			44200	5000	-	-	9360	41700	05	6185TA	Y		- TL -	20339
	8670	980	56500	6380	-	-	13200	59000	05	6190TA	Y		- TL -	20339
			70400	7960	-	-	13200	59000	05	6195TA	Y		- TL -	20339
	19100	2160	82300	9300	-	-	18900	84100	05	6205TD	Y		- TL -	20339
0.060	8670	980	56500	6380	-	-	13200	59000	05	6190TA	Y		- TL -	24037
			70400	7960	-	-	13200	59000	05	6195TA	Y		- TL -	24037
	19100	2160	82300	9300	-	-	18900	84100	05	6205TD	Y		- TL -	24037
0.052	8670	980	56500	6380	-	-	13200	58600	05	6190TA	Y		- TL -	27907
			70400	7960	-	-	13000	58100	05	6195TA	Y		- TL -	27907
	19100	2160	82300	9300	-	-	18900	84100	05	6205TD	Y		- TL -	27907
	23400	2650	112000	12700	-	-	23400	104000	05	6215TB	Y		- TL -	27907
0.046	8670	980	56500	6380	-	-	13200	59000	05	6190TA	Y		- TL -	31433
			70400	7960	-	-	13200	59000	05	6195TA	Y		- TL -	31433
	19100	2160	82300	9300	-	-	18900	84100	05	6205TD	Y		- TL -	31433
	23400	2650	112000	12700	-	-	23400	104000	05	6215TB	Y		- TL -	31433
0.038	8670	980	56500	6380	-	-	13200	58600	05	6190TA	Y		- TL -	38291
			70400	7960	-	-	13000	58100	05	6195TA	Y		- TL -	38291
	19100	2160	82300	9300	-	-	18900	84100	05	6205TD	Y		- TL -	38291
	23400	2650	112000	12700	-	-	23400	104000	05	6215TB	Y		- TL -	38291
	30300	3430	141000	15900	-	-	32600	145000	05	6225TB	Y		- TL -	38291
0.034	8670	980	56500	6380	-	-	13200	58600	05	6190TA	Y		- TL -	43129
			70400	7960	-	-	13000	58100	05	6195TA	Y		- TL -	43129
	19100	2160	82300	9300	-	-	18900	84100	05	6205TD	Y		- TL -	43129
	23400	2650	112000	12700	-	-	23400	104000	05	6215TB	Y		- TL -	43129
	30300	3430	141000	15900	-	-	32600	145000	05	6225TB	Y		- TL -	43129
	39000	4410	181000	20500	-	-	40200	179000	05	6235TA	Y		- TL -	43129

Note: [1] Contact Sumitomo for dimensions.

TORQUE LIMITER GEARMOTOR SELECTION TABLES – 50 Hz

1/2 HP, 0.4 kW, 50 Hz, 1450 RPM (con't.)

Output Speed	Min. Preset Output Torque		Max. Preset Output Torque		Service Factor		Overhung Load		Selection[1]					
RPM	in•lb	N•m	in•lb	N•m	SF	AGMA Class	lb	N	HP Symbol	Frame Size	Shaft Spec.	AGMA Class		Ratio
0.027	8670	980	56500	6380	-	-	13200	59000	05	6190TA	Y		- TL -	53621
			70400	7960	-	-	13200	59000	05	6195TA	Y		- TL -	53621
	19100	2160	82300	9300	-	-	18900	84100	05	6205TD	Y		- TL -	53621
	23400	2650	112000	12700	-	-	23400	104000	05	6215TB	Y		- TL -	53621
	30300	3430	142000	16000	-	-	32600	145000	05	6225TB	Y		- TL -	53621
	39000	4410	181000	20500	-	-	40200	179000	05	6235TA	Y		- TL -	53621
	47800	5400	228000	25800	-	-	46700	208000	05	6245TA	Y		- TL -	53621
0.025	8670	980	56500	6380	-	-	13200	58600	05	6190TA	Y		- TL -	59177
			70400	7960	-	-	13000	58100	05	6195TA	Y		- TL -	59177
	19100	2160	82300	9300	-	-	18900	84100	05	6205TD	Y		- TL -	59177
	23400	2650	112000	12700	-	-	23400	104000	05	6215TB	Y		- TL -	59177
	30300	3430	141000	15900	-	-	32600	145000	05	6225TB	Y		- TL -	59177
	39000	4410	181000	20500	-	-	40200	179000	05	6235TA	Y		- TL -	59177
	47800	5400	228000	25800	-	-	46700	208000	05	6245TA	Y		- TL -	59177
0.020	8670	980	56500	6380	-	-	13200	58600	05	6190TA	Y		- TL -	73573
			70400	7960	-	-	13000	58100	05	6195TA	Y		- TL -	73573
	19100	2160	82300	9300	-	-	18900	84100	05	6205TD	Y		- TL -	73573
	23400	2650	112000	12700	-	-	23400	104000	05	6215TB	Y		- TL -	73573
	30300	3430	141000	15900	-	-	32600	145000	05	6225TB	Y		- TL -	73573
	39000	4410	181000	20500	-	-	40200	179000	05	6235TA	Y		- TL -	73573
	47800	5400	228000	25800	-	-	46700	208000	05	6245TA	Y		- TL -	73573
	73800	8340	305000	34500	-	-	57900	258000	05	6255TA	Y		- TL -	73573
0.018	23400	2650	112000	12700	-	-	23400	104000	05	6215TB	Y		- TL -	79507
	30300	3430	142000	16000	-	-	32600	145000	05	6225TB	Y		- TL -	79507
	39000	4410	181000	20500	-	-	40200	179000	05	6235TA	Y		- TL -	79507
	47800	5400	228000	25800	-	-	46700	208000	05	6245TA	Y		- TL -	79507
	65100	7360	305000	34500	-	-	57900	258000	05	6255TA	Y		- TL -	79507
0.013	30300	3430	141000	15900	-	-	32600	145000	05	6225TB	Y		- TL -	109091
	39000	4410	181000	20500	-	-	40200	179000	05	6235TA	Y		- TL -	109091
	47800	5400	228000	25800	-	-	46700	208000	05	6245TA	Y		- TL -	109091
	73800	8340	305000	34500	-	-	57900	258000	05	6255TA	Y		- TL -	109091
0.010	30300	3430	141000	15900	-	-	32600	145000	05	6225TB	Y		- TL -	149683
	39000	4410	181000	20500	-	-	40200	179000	05	6235TA	Y		- TL -	149683
	47800	5400	228000	25800	-	-	46700	208000	05	6245TA	Y		- TL -	149683
	74700	8440	305000	34500	-	-	57900	258000	05	6255TA	Y		- TL -	149683
0.0032	30300	3430	134000	15100	-	-	32600	145000	05	6225TB	Y		- TL -	446571
	44200	5000	152000	17200	-	-	40200	179000	05	6235TA	Y		- TL -	446571
	47800	5400	200000	22600	-	-	46700	208000	05	6245TA	Y		- TL -	446571
	65100	7360	274000	31000	-	-	57900	258000	05	6255TA	Y		- TL -	446571
0.0022	30300	3430	134000	15100	-	-	32600	145000	05	6225TB	Y		- TL -	658503
	44200	5000	152000	17200	-	-	40200	179000	05	6235TA	Y		- TL -	658503
	47800	5400	200000	22600	-	-	46700	208000	05	6245TA	Y		- TL -	658503
	187000	21100	274000	31000	-	-	57900	258000	05	6255TD	Y		- TL -	658503

Note: [1] Contact Sumitomo for dimensions.

3/4 HP, 0.55 kW, 50 Hz, 1450 RPM

Output Speed	Min. Preset Output Torque		Max. Preset Output Torque		Service Factor		Overhung Load		Selection[1]					
RPM	in•lb	N•m	in•lb	N•m	SF	AGMA Class	lb	N	HP Symbol	Frame Size	Shaft Spec.	AGMA Class		Ratio
28.4	442	50	1460	165	1.02	I	1210	5400	08	6100	Y	A	- TL -	51
24.6	442	50	1680	190	1.24	I	1210	5400	08	6105	Y	A	- TL -	59
20.4	442	50	2040	230	0.92	-	1210	5390	08	6105	Y		- TL -	71
16.7	442	50	2430	275	0.92	-	1210	5380	08	6105	Y		- TL -	87
5.31	1770	200	6900	780	-	-	3300	14700	08	6130DC	Y		- TL -	273
4.55	2210	250	6900	780	-	-	3300	14700	08	6130DC	Y		- TL -	319
			8320	940	0.90	-	3300	14700	08	6135DC	Y		- TL -	319
3.85	2210	250	6900	780	-	-	3300	14700	08	6130DC	Y		- TL -	377
			8320	940	-	-	3300	14700	08	6135DC	Y		- TL -	377
			9910	1120	1.00	I	3590	16000	08	6140DC	Y	A	- TL -	377
3.07	3010	340	8320	940	-	-	3300	14700	08	6135DC	Y		- TL -	473
			10900	1230	-	-	3590	16000	08	6140DC	Y		- TL -	473
			12100	1370	0.89	-	3530	15700	08	6145DC	Y		- TL -	473
2.59	3010	340	10900	1230	-	-	3590	16000	08	6140DC	Y		- TL -	559
			12100	1370	-	-	3530	15700	08	6145DC	Y		- TL -	559
			14700	1660	0.96	-	4960	22100	08	6160DB	Y		- TL -	559
2.23	3890	440	12100	1370	-	-	3590	16000	08	6145DC	Y		- TL -	649
			15600	1760	-	-	4960	22100	08	6160DB	Y		- TL -	649
			17100	1930	0.98	-	4960	22100	08	6165DB	Y		- TL -	649
1.98	3010	340	15400	1740	-	-	4960	22100	08	6160DB	Y		- TL -	731
			18600	2100	0.88	-	4960	22100	08	6165DB	Y		- TL -	731
1.72	2210	250	15600	1760	-	-	4960	22100	08	6160DB	Y		- TL -	841
			18600	2100	-	-	4960	22100	08	6165DB	Y		- TL -	841
	2570	290	22100	2500	0.92	-	6620	29500	08	6170DB	Y		- TL -	841
1.45	3890	440	18600	2100	-	-	4960	22100	08	6165DB	Y		- TL -	1003
			22400	2530	-	-	6620	29500	08	6170DB	Y		- TL -	1003
			26500	2990	0.96	-	6620	29500	08	6175DB	Y		- TL -	1003
1.16	3010	340	22400	2530	-	-	6620	29500	08	6170DB	Y		- TL -	1247
			27900	3150	-	-	6620	29500	08	6175DB	Y		- TL -	1247
	4340	490	32800	3710	1.00	I	9360	41700	08	6180DA	Y	A	- TL -	1247
0.980	4340	490	27900	3150	-	-	6620	29500	08	6175DB	Y		- TL -	1479
			35900	4060	-	-	9360	41700	08	6180DA	Y		- TL -	1479
0.784	4340	490	35900	4060	-	-	9360	41700	08	6180DA	Y		- TL -	1849
			44200	5000	-	-	9360	41700	08	6185DA	Y		- TL -	1849
0.702	4340	490	44200	5000	-	-	9340	41600	08	6185DA	Y		- TL -	2065

Note: [1] Contact Sumitomo for dimensions.

TORQUE LIMITER GEARMOTOR SELECTION TABLES – 50 Hz

1 HP, 0.75 kW, 50 Hz, 1450 RPM

Output Speed	Min. Preset Output Torque		Max. Preset Output Torque		Service Factor		Overhung Load		Selection[1]					
RPM	in•lb	N•m	in•lb	N•m	SF	AGMA Class	lb	N	HP Symbol	Frame Size	Shaft Spec.	AGMA Class		Ratio
58.0	442	50	973	110	1.69	III	1210	5400	1	6100	Y	C	- TL -	25
50.0	442	50	1110	125	1.61	III	1210	5400	1	6100	Y	C	- TL -	29
41.4	442	50	1370	155	1.30	II	1210	5400	1	6100	Y	B	- TL -	35
33.7	442	50	1680	190	1.04	I	1210	5400	1	6100	Y	A	- TL -	43
28.4	442	50	1990	225	1.03	I	1210	5400	1	6105	Y	A	- TL -	51
24.6	442	50	2300	260	0.91	-	1210	5400	1	6105	Y		- TL -	59
20.4	442	50	2740	310	1.52	II	2200	9810	1	6125	Y	B	- TL -	71
16.7	885	100	3360	380	1.89	III	3300	14700	1	6130	Y	C	- TL -	87
10.1	885	100	5130	580	1.23	I	3300	14700	1	6130DC	Y	A	- TL -	143
8.79	1330	150	5930	670	1.06	I	3300	14700	1	6130DC	Y	A	- TL -	165
7.44	1330	150	6900	780	0.90	-	3300	14700	1	6130DC	Y		- TL -	195
			6990	790	1.08	I	3300	14700	1	6135DC	Y	A	- TL -	195
6.28	1770	200	6900	780	-	-	3300	14700	1	6130DC	Y		- TL -	231
			8270	935	0.92	-	3300	14700	1	6135DC	Y		- TL -	231
5.31	1770	200	6900	780	-	-	3300	14700	1	6130DC	Y		- TL -	273
			8320	940	-	-	3300	14700	1	6135DC	Y		- TL -	273
			9820	1110	1.02	I	3590	16000	1	6140DC	Y	A	- TL -	273
4.55	2210	250	8320	940	-	-	3300	14700	1	6135DC	Y		- TL -	319
			10900	1230	-	-	3590	16000	1	6140DC	Y		- TL -	319
			11400	1290	0.97	-	3590	16000	1	6145DC	Y		- TL -	319
3.85	2210	250	10900	1230	-	-	3590	16000	1	6140DC	Y		- TL -	377
			12100	1370	0.82	-	3550	15800	1	6145DC	Y		- TL -	377
			13500	1530	1.05	I	4960	22100	1	6160DB	Y	A	- TL -	377
3.07	3010	340	12100	1370	-	-	3530	15700	1	6145DC	Y		- TL -	473
			15400	1740	-	-	4960	22100	1	6160DB	Y		- TL -	473
			17000	1920	1.00	I	4960	22100	1	6165DB	Y	A	- TL -	473
2.59	3010	340	15400	1740	-	-	4960	22100	1	6160DB	Y		- TL -	559
			18600	2100	0.85	-	4960	22100	1	6165DB	Y		- TL -	559
			20100	2270	1.02	I	6620	29500	1	6170DB	Y	A	- TL -	559
2.23	3890	440	18600	2100	-	-	4960	22100	1	6165DB	Y		- TL -	649
			22400	2530	0.88	-	6620	29500	1	6170DB	Y		- TL -	649
			23300	2630	1.09	I	6620	29500	1	6175DB	Y	A	- TL -	649
1.98	3010	340	18600	2100	-	-	4960	22100	1	6165DB	Y		- TL -	731
			22400	2530	-	-	6620	29500	1	6170DB	Y		- TL -	731
			26300	2970	0.97	-	6620	29500	1	6175DB	Y		- TL -	731
1.72	2570	290	22400	2530	-	-	6620	29500	1	6170DB	Y		- TL -	841
			27900	3150	0.84	-	6620	29500	1	6175DB	Y		- TL -	841
	4340	490	30200	3410	1.08	I	9360	41700	1	6180DA	Y	A	- TL -	841
1.45	3890	440	27900	3150	-	-	6620	29500	1	6175DB	Y		- TL -	1003
	4340	490	35800	4050	0.91	-	9360	41700	1	6180DA	Y		- TL -	1003
			36000	4070	1.12	I	9360	41700	1	6185DA	Y	A	- TL -	1003
1.16	4340	490	35900	4060	-	-	9360	41700	1	6180DA	Y		- TL -	1247
			44200	5000	0.90	-	9360	41700	1	6185DA	Y		- TL -	1247
0.980	4340	490	35900	4060	-	-	9360	41700	1	6180DA	Y		- TL -	1479
			44200	5000	-	-	9360	41700	1	6185DA	Y		- TL -	1479
	8670	980	53100	6000	0.97	-	13200	59000	1	6190DA	Y		- TL -	1479

Note: [1] Contact Sumitomo for dimensions.

1 HP, 0.75 kW, 50 Hz, 1450 RPM

Output Speed	Min. Preset Output Torque		Max. Preset Output Torque		Service Factor		Overhung Load		Selection[1]					
RPM	in•lb	N•m	in•lb	N•m	SF	AGMA Class	lb	N	HP Symbol	Frame Size	Shaft Spec.	AGMA Class		Ratio
0.784	8670	980	56500	6380	-	-	13200	59000	1	6190DA	Y		- TL -	1849
			66400	7500	0.97	-	13200	59000	1	6195DA	Y		- TL -	1849
0.702	8670	980	56500	6380	-	-	13200	58600	1	6190DA	Y		- TL -	2065
			70400	7960	0.87	-	13000	58100	1	6195DA	Y		- TL -	2065
0.572	8670	980	56500	6380	-	-	13200	58600	1	6190DA	Y		- TL -	2537
			70400	7960	-	-	13000	58100	1	6195DA	Y		- TL -	2537
	19100	2160	82300	9300	0.82	-	18900	84100	1	6205DB	Y		- TL -	2537
0.476	8670	980	56500	6380	-	-	13200	58900	1	6190DA	Y		- TL -	3045
			70400	7960	-	-	13100	58400	1	6195DA	Y		- TL -	3045
0.417	8670	980	56500	6380	-	-	13200	58600	1	6190DA	Y		- TL -	3481
			70400	7960	-	-	13000	58100	1	6195DA	Y		- TL -	3481
	19100	2160	82300	9300	-	-	18900	84100	1	6205DB	Y		- TL -	3481
0.327	8670	980	56500	6380	-	-	13200	58900	1	6190DA	Y		- TL -	4437
			70400	7960	-	-	13100	58400	1	6195DA	Y		- TL -	4437
	19100	2160	77500	8760	-	-	18900	84100	1	6205DB	Y		- TL -	4437
0.282	8670	980	56500	6380	-	-	13200	58900	1	6190DA	Y		- TL -	5133
			70400	7960	-	-	13100	58400	1	6195DA	Y		- TL -	5133
	19100	2160	82300	9300	-	-	18900	84100	1	6205DB	Y		- TL -	5133
0.235	8670	980	56500	6380	-	-	13200	58900	1	6190DA	Y		- TL -	6177
			70400	7960	-	-	13100	58400	1	6195DA	Y		- TL -	6177
	19100	2160	77500	8760	-	-	18900	84100	1	6205DB	Y		- TL -	6177
0.192	8670	980	56500	6380	-	-	13200	58900	1	6190DA	Y		- TL -	7569
			70400	7960	-	-	13100	58400	1	6195DA	Y		- TL -	7569
	19100	2160	77500	8760	-	-	18900	84100	1	6205DB	Y		- TL -	7569
0.157	8670	980	56500	6380	-	-	13200	59000	1	6190TD	Y		- TL -	9251
			70400	7960	-	-	13200	59000	1	6195TD	Y		- TL -	9251
	19100	2160	81700	9230	-	-	18900	84100	1	6205TD	Y		- TL -	9251
	23400	2650	108000	12200	-	-	23400	104000	1	6215TB	Y		- TL -	9251
0.133	8670	980	56500	6380	-	-	13200	59000	1	6190TD	Y		- TL -	10933
			70400	7960	-	-	13200	59000	1	6195TD	Y		- TL -	10933
	19100	2160	81700	9230	-	-	18900	84100	1	6205TD	Y		- TL -	10933
	23400	2650	101000	11400	-	-	23400	104000	1	6215TB	Y		- TL -	10933
0.106	12100	1370	56500	6380	-	-	13200	58600	1	6190TD	Y		- TL -	13629
			70400	7960	-	-	13000	58100	1	6195TD	Y		- TL -	13629
	19100	2160	82300	9300	-	-	18900	84100	1	6205TD	Y		- TL -	13629
0.089	8670	980	56500	6380	-	-	13200	59000	1	6190TD	Y		- TL -	16211
			70400	7960	-	-	13200	59000	1	6195TD	Y		- TL -	16211
	19100	2160	82300	9300	-	-	18900	84100	1	6205TD	Y		- TL -	16211
	23400	2650	112000	12700	-	-	23400	104000	1	6215TB	Y		- TL -	16211
	30300	3430	142000	16000	-	-	32600	145000	1	6225TB	Y		- TL -	16211
	39000	4410	181000	20500	-	-	40200	179000	1	6235TA	Y		- TL -	16211
0.071	23400	2650	112000	12700	-	-	23400	104000	1	6215TB	Y		- TL -	20339
	30300	3430	142000	16000	-	-	32600	145000	1	6225TB	Y		- TL -	20339
	39000	4410	181000	20500	-	-	40200	179000	1	6235TA	Y		- TL -	20339
0.060	23400	2650	112000	12700	-	-	23400	104000	1	6215TB	Y		- TL -	24037
	30300	3430	142000	16000	-	-	32600	145000	1	6225TB	Y		- TL -	24037
	39000	4410	181000	20500	-	-	40200	179000	1	6235TA	Y		- TL -	24037

Note: [1] Contact Sumitomo for dimensions.

TORQUE LIMITER GEARMOTOR SELECTION TABLES – 50 Hz

1 HP, 0.75 kW, 50 Hz, 1450 RPM (con't.)

Output Speed	Min. Preset Output Torque		Max. Preset Output Torque		Service Factor		Overhung Load		Selection[1]					
RPM	in•lb	N•m	in•lb	N•m	SF	AGMA Class	lb	N	HP Symbol	Frame Size	Shaft Spec.	AGMA Class		Ratio
0.052	30300	3430	141000	15900	-	-	32600	145000	1	6225TB	Y		- TL -	27907
	39000	4410	181000	20500	-	-	40200	179000	1	6235TA	Y		- TL -	27907
0.046	30300	3430	142000	16000	-	-	32600	145000	1	6225TB	Y		- TL -	31433
	39000	4410	181000	20500	-	-	40200	179000	1	6235TA	Y		- TL -	31433
	47800	5400	228000	25800	-	-	46700	208000	1	6245TA	Y		- TL -	31433
0.038	39000	4410	181000	20500	-	-	40200	179000	1	6235TA	Y		- TL -	38291
	47800	5400	228000	25800	-	-	46700	208000	1	6245TA	Y		- TL -	38291
	74700	8440	305000	34500	-	-	57900	258000	1	6255TA	Y		- TL -	38291
0.034	47800	5400	228000	25800	-	-	46700	208000	1	6245TA	Y		- TL -	43129
	73800	8340	305000	34500	-	-	57900	258000	1	6255TA	Y		- TL -	43129
0.027	65100	7360	305000	34500	-	-	57900	258000	1	6255TA	Y		- TL -	53621
	91100	10300	407000	46000	-	-	62000	276000	1	6265TA	Y		- TL -	53621
0.025	74700	8440	305000	34500	-	-	57900	258000	1	6255TA	Y		- TL -	59177
	126000	14200	407000	46000	-	-	62000	276000	1	6265TA	Y		- TL -	59177
0.020	126000	14200	407000	46000	-	-	62000	276000	1	6265TA	Y		- TL -	73573
0.018	91100	10300	407000	46000	-	-	62000	276000	1	6265TA	Y		- TL -	79507
	130000	14700	603000	68200	-	-	55700	248000	1	6275TA	Y		- TL -	79507
0.013	126000	14200	407000	46000	-	-	62000	276000	1	6265TA	Y		- TL -	109091
	130000	14700	603000	68200	-	-	55700	248000	1	6275TA	Y		- TL -	109091
0.010	126000	14200	407000	46000	-	-	62000	276000	1	6265TA	Y		- TL -	149683
	130000	14700	603000	68200	-	-	55700	248000	1	6275TA	Y		- TL -	149683
0.0032	91100	10300	389000	44000	-	-	62000	276000	1	6265TA	Y		- TL -	446571
	187000	21100	603000	68200	-	-	55000	245000	1	6275TA	Y		- TL -	446571
0.0022	187000	21100	389000	44000	-	-	62000	276000	1	6265TA	Y		- TL -	658503
			603000	68200	-	-	55000	245000	1	6275TA	Y		- TL -	658503

1.5 HP, 1.1 kW, 50 Hz, 1450 RPM

Output Speed	Min. Preset Output Torque		Max. Preset Output Torque		Service Factor		Overhung Load		Selection[1]					
RPM	in•lb	N•m	in•lb	N•m	SF	AGMA Class	lb	N	HP Symbol	Frame Size	Shaft Spec.	AGMA Class		Ratio
58.0	442	50	1420	160	1.15	I	1210	5400	1H	6100	Y	A	- TL -	25
50.0	442	50	1640	185	1.10	I	1210	5400	1H	6100	Y	A	- TL -	29
41.4	442	50	1990	225	1.09	I	1210	5400	1H	6105	Y	A	- TL -	35
33.7	442	50	2390	270	0.98	-	1210	5400	1H	6105	Y		- TL -	43
28.4	442	50	2920	330	1.48	II	2200	9810	1H	6120	Y	B	- TL -	51
24.6	885	100	3360	380	1.92	III	2940	13100	1H	6130	Y	C	- TL -	59
20.4	885	100	4070	460	1.60	III	3120	13900	1H	6130	Y	C	- TL -	71
16.7	885	100	4950	560	1.29	I	3300	14700	1H	6130	Y	A	- TL -	87
10.1	885	100	6900	780	-	-	3300	14700	1H	6130DC	Y		- TL -	143
			7520	850	1.01	I	3300	14700	1H	6135DC	Y	A	- TL -	143
8.79	1330	150	6900	780	-	-	3300	14700	1H	6130DC	Y		- TL -	165
			8320	940	0.87	-	3300	14700	1H	6135DC	Y		- TL -	165
7.44	1330	150	6900	780	-	-	3300	14700	1H	6130DC	Y		- TL -	195
			8320	940	-	-	3300	14700	1H	6135DC	Y		- TL -	195
			10300	1160	0.97	-	3590	16000	1H	6140DC	Y		- TL -	195

Note: [1] Contact Sumitomo for dimensions.

1.5 HP, 1.1 kW, 50 Hz, 1450 RPM

Output Speed	Min. Preset Output Torque		Max. Preset Output Torque		Service Factor		Overhung Load		Selection[1]					
RPM	in•lb	N•m	in•lb	N•m	SF	AGMA Class	lb	N	HP Symbol	Frame Size	Shaft Spec.	AGMA Class		Ratio
6.28	1770	200	8320	940	-	-	3300	14700	1H	6135DC	Y		- TL -	231
			10900	1230	-	-	3590	16000	1H	6140DC	Y		- TL -	231
			12200	1380	1.17	I	4960	22100	1H	6160DB	Y	A	- TL -	231
5.31	1770	200	10900	1230	-	-	3590	16000	1H	6140DC	Y		- TL -	273
			14400	1630	0.99	-	4960	22100	1H	6160DB	Y		- TL -	273
4.55	2210	250	10900	1230	-	-	3590	16000	1H	6140DC	Y		- TL -	319
			12100	1370	-	-	3550	15800	1H	6145DC	Y		- TL -	319
			15600	1760	-	-	4960	22100	1H	6160DB	Y		- TL -	319
3.85	2210	250	15600	1760	-	-	4960	22100	1H	6160DB	Y		- TL -	377
			18600	2100	0.85	-	4960	22100	1H	6165DB	Y		- TL -	377
3.07	3010	340	18600	2100	-	-	4960	22100	1H	6165DB	Y		- TL -	473
			22400	2530	-	-	6620	29500	1H	6170DB	Y		- TL -	473
			25000	2820	1.02	I	6620	29500	1H	6175DB	Y	A	- TL -	473
2.59	3010	340	18600	2100	-	-	4960	22100	1H	6165DB	Y		- TL -	559
			22400	2530	-	-	6620	29500	1H	6170DB	Y		- TL -	559
			27900	3150	0.86	-	6620	29500	1H	6175DB	Y		- TL -	559
2.23	3890	440	22400	2530	-	-	6620	29500	1H	6170DB	Y		- TL -	649
			27900	3150	-	-	6620	29500	1H	6175DB	Y		- TL -	649
	4340	490	34200	3860	0.96	-	9360	41700	1H	6180DA	Y		- TL -	649
1.98	3010	340	27900	3150	-	-	6620	29500	1H	6175DB	Y		- TL -	731
	4340	490	35900	4060	-	-	9360	41700	1H	6180DA	Y		- TL -	731
1.72	2570	290	27900	3150	-	-	6620	29500	1H	6175DB	Y		- TL -	841
	4340	490	35800	4050	-	-	9360	41700	1H	6180DA	Y		- TL -	841
			44200	5000	0.91	-	9360	41700	1H	6185DA	Y		- TL -	841
	8670	980	44300	5010	1.16	I	13200	59000	1H	6190DA	Y	A	- TL -	841
1.45	4340	490	35800	4050	-	-	9360	41700	1H	6180DA	Y		- TL -	1003
			44200	5000	-	-	9340	41600	1H	6185DA	Y		- TL -	1003
	8670	980	52800	5970	0.98	-	13200	58700	1H	6190DA	Y		- TL -	1003
1.16	4340	490	44200	5000	-	-	9360	41700	1H	6185DA	Y		- TL -	1247
	8670	980	56500	6380	-	-	13200	59000	1H	6190DA	Y		- TL -	1247
			65700	7420	0.98	-	13200	59000	1H	6195DA	Y		- TL -	1247
0.980	8670	980	56500	6380	-	-	13200	58900	1H	6190DA	Y		- TL -	1479
			70400	7960	0.83	-	13100	58400	1H	6195DA	Y		- TL -	1479
	19100	2160	77500	8760	0.91	-	18900	84100	1H	6205DB	Y		- TL -	1479
0.784	8670	980	70400	7960	-	-	13200	59000	1H	6195DA	Y		- TL -	1849
	19100	2160	82300	9300	-	-	18900	84100	1H	6205DB	Y		- TL -	1849
0.702	8670	980	70400	7960	-	-	13000	58100	1H	6195DA	Y		- TL -	2065
	19100	2160	82300	9300	-	-	18900	84100	1H	6205DB	Y		- TL -	2065

Note: [1] Contact Sumitomo for dimensions.

TORQUE LIMITER GEARMOTOR SELECTION TABLES – 50 Hz

2 HP, 1.5 kW, 50 Hz, 1450 RPM

Output Speed	Min. Preset Output Torque		Max. Preset Output Torque		Service Factor		Overhung Load		Selection[1]					
RPM	in•lb	N•m	in•lb	N•m	SF	AGMA Class	lb	N	HP Symbol	Frame Size	Shaft Spec.	AGMA Class		Ratio
181	442	50	626	70	1.57	II	1040	4610	2	6100	Y	B	- TL -	8
132	442	50	860	97	1.57	II	1170	5230	2	6100	Y	B	- TL -	11
112	442	50	1020	115	1.57	II	1210	5400	2	6100	Y	B	- TL -	13
96.7	442	50	1150	130	1.57	II	1210	5400	2	6100	Y	B	- TL -	15
85.3	442	50	1330	150	1.33	II	1210	5400	2	6100	Y	B	- TL -	17
69.0	442	50	1640	185	1.52	II	1210	5400	2	6105	Y	B	- TL -	21
58.0	442	50	1950	220	1.11	I	1210	5400	2	6105	Y	A	- TL -	25
50.0	442	50	2260	255	1.06	I	1210	5400	2	6105	Y	A	- TL -	29
41.4	442	50	2700	305	1.58	II	2130	9500	2	6120	Y	B	- TL -	35
33.7	885	100	3360	380	1.93	III	2670	11900	2	6130	Y	C	- TL -	43
28.4	885	100	3980	450	1.70	III	2780	12400	2	6135	Y	C	- TL -	51
24.6	885	100	4600	520	1.41	II	2920	13000	2	6130	Y	B	- TL -	59
22.0	885	100	4730	535	1.33	II	3170	14100	2	6130DC	Y	B	- TL -	66
20.4	885	100	5530	625	1.17	I	3100	13800	2	6130	Y	A	- TL -	71
18.6	885	100	5570	630	1.12	I	3280	14600	2	6130DC	Y	A	- TL -	78
16.7	885	100	6370	720	1.10	I	3300	14700	2	6135	Y	A	- TL -	87
16.5	885	100	6280	710	1.00	I	3300	14700	2	6130DC	Y	A	- TL -	88
13.9	885	100	6900	780	-	-	3300	14700	2	6130DC	Y		- TL -	104
			7430	840	1.02	I	3300	14700	2	6135DC	Y	A	- TL -	104
12.0	885	100	6900	780	-	-	3300	14700	2	6130DC	Y		- TL -	121
			8320	940	0.87	-	3300	14700	2	6135DC	Y		- TL -	121
	1330	150	8670	980	1.14	I	3590	16000	2	6140DC	Y	A	- TL -	121
10.1	885	100	8320	940	-	-	3300	14700	2	6135DC	Y		- TL -	143
	1330	150	10300	1160	0.97	-	3590	16000	2	6140DC	Y		- TL -	143
8.79	1330	150	8320	940	-	-	3300	14700	2	6135DC	Y		- TL -	165
			10900	1230	-	-	3590	16000	2	6140DC	Y		- TL -	165
			11900	1340	0.93	-	3590	16000	2	6145DC	Y		- TL -	165
7.44	1330	150	10900	1230	-	-	3590	16000	2	6140DC	Y		- TL -	195
			12000	1360	-	-	3590	16000	2	6145DC	Y		- TL -	195
	1770	200	14000	1580	1.01	I	4960	22100	2	6160DB	Y	A	- TL -	195
6.28	1770	200	15600	1760	-	-	4960	22100	2	6160DB	Y		- TL -	231
			16600	1880	1.02	I	4960	22100	2	6165DB	Y	A	- TL -	231
5.31	1770	200	15600	1760	-	-	4960	22100	2	6160DB	Y		- TL -	273
			18600	2100	0.87	-	4960	22100	2	6165DB	Y		- TL -	273
	2570	290	19600	2220	1.04	I	6620	29500	2	6170DB	Y	A	- TL -	273
4.55	2210	250	15600	1760	-	-	4960	22100	2	6160DB	Y		- TL -	319
			18600	2100	-	-	4960	22100	2	6165DB	Y		- TL -	319
	2570	290	22400	2530	-	-	6620	29500	2	6170DB	Y		- TL -	319
			22900	2590	1.11	I	6620	29500	2	6175DB	Y	A	- TL -	319
3.85	2210	250	18600	2100	-	-	4960	22100	2	6165DB	Y		- TL -	377
	2570	290	22400	2530	-	-	6620	29500	2	6170DB	Y		- TL -	377
			27100	3060	0.94	-	6620	29500	2	6175DB	Y		- TL -	377
3.07	3010	340	27900	3150	-	-	6620	29500	2	6175DB	Y		- TL -	473
	4340	490	34000	3840	0.96	-	9360	41700	2	6180DA	Y		- TL -	473
2.59	3010	340	27900	3150	-	-	6620	29500	2	6175DB	Y		- TL -	559
	4340	490	35900	4060	-	-	9360	41700	2	6180DA	Y		- TL -	559
			40200	4540	1.01	I	9360	41700	2	6185DA	Y	A	- TL -	559

Note: [1] Contact Sumitomo for dimensions.

2 HP, 1.5 kW, 50 Hz, 1450 RPM

Output Speed	Min. Preset Output Torque		Max. Preset Output Torque		Service Factor		Overhung Load		Selection[1]					
RPM	in•lb	N•m	in•lb	N•m	SF	AGMA Class	lb	N	HP Symbol	Frame Size	Shaft Spec.	AGMA Class		Ratio
2.23	4340	490	35800	4050	-	-	9360	41700	2	6180DA	Y		- TL -	649
			44200	5000	0.87	-	9340	41600	2	6185DA	Y		- TL -	649
	8670	980	46600	5270	1.11	I	13200	58900	2	6190DA	Y	A	- TL -	649
1.98	4340	490	35900	4060	-	-	9360	41700	2	6180DA	Y		- TL -	731
			44200	5000	-	-	9360	41700	2	6185DA	Y		- TL -	731
	8670	980	52500	5930	0.98	-	13200	59000	2	6190DA	Y		- TL -	731
1.72	4340	490	44200	5000	-	-	9360	41700	2	6185DA	Y		- TL -	841
	8670	980	56500	6380	-	-	13200	59000	2	6190DA	Y		- TL -	841
			60400	6830	1.06	I	13200	59000	2	6195DA	Y	A	- TL -	841
1.45	8670	980	56500	6380	-	-	13200	58600	2	6190DA	Y		- TL -	1003
			70400	7960	0.89	-	13000	58100	2	6195DA	Y		- TL -	1003
	19100	2160	72000	8140	1.04	I	18900	84100	2	6205DB	Y	A	- TL -	1003
1.16	8670	980	70400	7960	-	-	13200	59000	2	6195DA	Y		- TL -	1247
	23400	2650	89400	10100	-	-	23400	104000	2	6215DA	Y		- TL -	1247
0.980	23400	2650	100000	11300	-	-	23400	104000	2	6215DA	Y		- TL -	1479
	30300	3430	106000	12000	1.14	I	32600	145000	2	6225DA	Y	A	- TL -	1479
0.784	23400	2650	112000	12700	-	-	23400	104000	2	6215DA	Y		- TL -	1849
	30300	3430	133000	15000	0.97	-	32600	145000	2	6225DA	Y		- TL -	1849
0.702	23400	2650	112000	12700	-	-	23400	104000	2	6215DA	Y		- TL -	2065
	30300	3430	141000	15900	-	-	32600	145000	2	6225DA	Y		- TL -	2065
0.572	23400	2650	112000	12700	-	-	23400	104000	2	6215DA	Y		- TL -	2537
	30300	3430	141000	15900	-	-	32600	145000	2	6225DA	Y		- TL -	2537
0.476	23400	2650	100000	11300	-	-	23400	104000	2	6215DA	Y		- TL -	3045
	30300	3430	134000	15100	-	-	32600	145000	2	6225DA	Y		- TL -	3045
0.417	23400	2650	112000	12700	-	-	23400	104000	2	6215DA	Y		- TL -	3481
	30300	3430	141000	15900	-	-	32600	145000	2	6225DA	Y		- TL -	3481
0.327	23400	2650	100000	11300	-	-	23400	104000	2	6215DA	Y		- TL -	4437
	30300	3430	134000	15100	-	-	32600	145000	2	6225DA	Y		- TL -	4437
0.282	23400	2650	112000	12700	-	-	23400	104000	2	6215DA	Y		- TL -	5133
	30300	3430	141000	15900	-	-	32600	145000	2	6225DA	Y		- TL -	5133
0.235	23400	2650	100000	11300	-	-	23400	104000	2	6215DA	Y		- TL -	6177
	30300	3430	134000	15100	-	-	32600	145000	2	6225DA	Y		- TL -	6177
0.192	23400	2650	100000	11300	-	-	23400	104000	2	6215DA	Y		- TL -	7569
	30300	3430	134000	15100	-	-	32600	145000	2	6225DA	Y		- TL -	7569
0.157	30300	3430	133000	15000	-	-	32600	145000	2	6225TD	Y		- TL -	9251
	39000	4410	167000	18900	-	-	40200	179000	2	6235TA	Y		- TL -	9251
	47800	5400	196000	22200	-	-	46700	208000	2	6245TB	Y		- TL -	9251
0.133	23400	2650	112000	12700	-	-	23400	104000	2	6215TD	Y		- TL -	10933
	30300	3430	133000	15000	-	-	32600	145000	2	6225TD	Y		- TL -	10933
	39000	4410	167000	18900	-	-	40200	179000	2	6235TA	Y		- TL -	10933
	65100	7360	288000	32500	-	-	57900	258000	2	6255TB	Y		- TL -	10933
0.106	23400	2650	112000	12700	-	-	23400	104000	2	6215TB	Y		- TL -	13629
	30300	3430	141000	15900	-	-	32600	145000	2	6225TB	Y		- TL -	13629
	39000	4410	181000	20500	-	-	40200	179000	2	6235TA	Y		- TL -	13629
	47800	5400	228000	25800	-	-	46700	208000	2	6245TA	Y		- TL -	13629
	65100	7360	305000	34500	-	-	57900	258000	2	6255TA	Y		- TL -	13629

Note: [1] Contact Sumitomo for dimensions.

TORQUE LIMITER GEARMOTOR SELECTION TABLES – 50 Hz

2 HP, 1.5 kW, 50 Hz, 1450 RPM (con't.)

Output Speed	Min. Preset Output Torque		Max. Preset Output Torque		Service Factor		Overhung Load		Selection[1]					
RPM	in•lb	N•m	in•lb	N•m	SF	AGMA Class	lb	N	HP Symbol	Frame Size	Shaft Spec.	AGMA Class		Ratio
0.089	47800	5400	228000	25800	-	-	46700	208000	2	6245TA	Y		- TL -	16211
	65100	7360	305000	34500	-	-	57900	258000	2	6255TA	Y		- TL -	16211
0.071	47800	5400	228000	25800	-	-	46700	208000	2	6245TA	Y		- TL -	20339
	65100	7360	305000	34500	-	-	57900	258000	2	6255TA	Y		- TL -	20339
	91100	10300	407000	46000	-	-	62000	276000	2	6265TA	Y		- TL -	20339
0.060	47800	5400	228000	25800	-	-	46700	208000	2	6245TA	Y		- TL -	24037
	65100	7360	305000	34500	-	-	57900	258000	2	6255TA	Y		- TL -	24037
	91100	10300	407000	46000	-	-	62000	276000	2	6265TA	Y		- TL -	24037
0.052	47800	5400	228000	25800	-	-	46700	208000	2	6245TA	Y		- TL -	27907
	65100	7360	305000	34500	-	-	57900	258000	2	6255TA	Y		- TL -	27907
	91100	10300	407000	46000	-	-	62000	276000	2	6265TA	Y		- TL -	27907
0.046	65100	7360	305000	34500	-	-	57900	258000	2	6255TA	Y		- TL -	31433
	91100	10300	407000	46000	-	-	62000	276000	2	6265TA	Y		- TL -	31433
	130000	14700	603000	68200	-	-	55700	248000	2	6275TA	Y		- TL -	31433
0.038	91100	10300	407000	46000	-	-	62000	276000	2	6265TA	Y		- TL -	38291
	130000	14700	603000	68200	-	-	55700	248000	2	6275TA	Y		- TL -	38291
0.034	91100	10300	407000	46000	-	-	62000	276000	2	6265TA	Y		- TL -	43129
	130000	14700	603000	68200	-	-	55700	248000	2	6275TA	Y		- TL -	43129
0.027	130000	14700	603000	68200	-	-	55700	248000	2	6275TA	Y		- TL -	53621
0.025	130000	14700	603000	68200	-	-	55700	248000	2	6275TA	Y		- TL -	59177
0.020	130000	14700	603000	68200	-	-	55700	248000	2	6275TA	Y		- TL -	73573

3 HP, 2.2 kW, 50 Hz, 1450 RPM

Output Speed	Min. Preset Output Torque		Max. Preset Output Torque		Service Factor		Overhung Load		Selection[1]					
RPM	in•lb	N•m	in•lb	N•m	SF	AGMA Class	lb	N	HP Symbol	Frame Size	Shaft Spec.	AGMA Class		Ratio
242	442	50	687	77	1.07	I	921	4100	3	6100	Y	A	- TL -	6
181	442	50	885	100	1.07	I	1020	4560	3	6100	Y	A	- TL -	8
132	442	50	1240	140	1.07	I	1160	5180	3	6100	Y	A	- TL -	11
112	442	50	1460	165	1.07	I	1210	5380	3	6100	Y	A	- TL -	13
96.7	442	50	1680	190	1.07	I	1210	5400	3	6100	Y	A	- TL -	15
85.3	442	50	1950	220	1.12	I	1210	5400	3	6105	Y	A	- TL -	17
69.0	442	50	2340	265	1.04	I	1210	5400	3	6105	Y	A	- TL -	21
58.0	442	50	2830	320	1.40	II	1930	8580	3	6120	Y	B	- TL -	25
50.0	885	100	3320	375	1.95	III	2360	10500	3	6130	Y	C	- TL -	29
41.4	885	100	3980	450	1.62	III	2470	11000	3	6130	Y	C	- TL -	35
33.7	885	100	4910	555	1.52	II	2650	11800	3	6135	Y	B	- TL -	43
28.4	885	100	5840	660	1.16	I	2760	12300	3	6135	Y	A	- TL -	51
24.6	885	100	6330	715	1.11	I	2900	12900	3	6135	Y	A	- TL -	59
22.0	885	100	6900	780	0.91	-	3120	13900	3	6130DC	Y		- TL -	66
			6950	785	1.09	I	3120	13900	3	6135DC	Y	A	- TL -	66
20.4	1770	200	8140	920	1.58	II	4960	22100	3	6160	Y	B	- TL -	71
18.6	885	100	6900	780	-	-	3260	14500	3	6130DC	Y		- TL -	78
			8180	925	0.92	-	3230	14400	3	6135DC	Y		- TL -	78
16.7	1770	200	10000	1130	1.46	II	4960	22100	3	6160	Y	B	- TL -	87

Note: [1] Contact Sumitomo for dimensions.

3 HP, 2.2 kW, 50 Hz, 1450 RPM

Output Speed	Min. Preset Output Torque		Max. Preset Output Torque		Service Factor		Overhung Load		Selection[1]					
RPM	in•lb	N•m	in•lb	N•m	SF	AGMA Class	lb	N	HP Symbol	Frame Size	Shaft Spec.	AGMA Class		Ratio
16.5	885	100	6900	780	-	-	3300	14700	3	6130DC	Y		- TL -	88
			8320	940	-	-	3300	14700	3	6135DC	Y		- TL -	88
	1330	150	9290	1050	1.07	I	3590	16000	3	6140DC	Y	A	- TL -	88
13.9	885	100	6900	780	-	-	3300	14700	3	6130DC	Y		- TL -	104
			8320	940	-	-	3300	14700	3	6135DC	Y		- TL -	104
	1330	150	10900	1230	0.90	-	3590	16000	3	6140DC	Y		- TL -	104
			11000	1240	1.01	I	3590	16000	3	6145DC	Y	A	- TL -	104
12.0	885	100	8320	940	-	-	3300	14700	3	6135DC	Y		- TL -	121
	1330	150	10900	1230	-	-	3590	16000	3	6140DC	Y		- TL -	121
	1770	200	12700	1440	1.11	I	4960	22100	3	6160DB	Y	A	- TL -	121
10.1	1330	150	10900	1230	-	-	3590	16000	3	6140DC	Y		- TL -	143
	1330	150	12100	1370	-	-	3570	15900	3	6145DC	Y		- TL -	143
	1770	200	15000	1700	0.95	-	4960	22100	3	6160DB	Y		- TL -	143
8.79	1330	150	12000	1360	-	-	3590	16000	3	6145DC	Y		- TL -	165
	1770	200	15600	1760	-	-	4960	22100	3	6160DB	Y		- TL -	165
			17300	1960	0.98	-	4960	22100	3	6165DB	Y		- TL -	165
7.44	1770	200	15600	1760	-	-	4960	22100	3	6160DB	Y		- TL -	195
			18600	2100	0.83	-	4960	22100	3	6165DB	Y		- TL -	195
	2570	290	20500	2320	1.00	I	6620	29500	3	6170DB	Y	A	- TL -	195
6.28	1770	200	15600	1760	-	-	4960	22100	3	6160DB	Y		- TL -	231
			18600	2100	-	-	4960	22100	3	6165DB	Y		- TL -	231
	2570	290	22400	2530	-	-	6620	29500	3	6170DB	Y		- TL -	231
			24300	2750	1.05	I	6620	29500	3	6175DB	Y	A	- TL -	231
5.31	1770	200	18600	2100	-	-	4960	22100	3	6165DB	Y		- TL -	273
	2570	290	22400	2530	-	-	6620	29500	3	6170DB	Y		- TL -	273
			27900	3150	0.88	-	6620	29500	3	6175DB	Y		- TL -	273
	4340	490	28800	3250	1.14	I	9360	41700	3	6180DA	Y	A	- TL -	273
4.55	2570	290	22400	2530	-	-	6620	29500	3	6170DB	Y		- TL -	319
			27900	3150	-	-	6620	29500	3	6175DB	Y		- TL -	319
	4340	490	33600	3800	0.97	-	9360	41700	3	6180DA	Y		- TL -	319
3.85	2570	290	27900	3150	-	-	6620	29500	3	6175DB	Y		- TL -	377
	4340	490	35800	4050	-	-	9360	41700	3	6180DA	Y		- TL -	377
			39700	4490	1.02	I	9360	41700	3	6185DA	Y	A	- TL -	377
3.07	4340	490	35900	4060	-	-	9360	41700	3	6180DA	Y		- TL -	473
			44200	5000	0.81	-	9360	41700	3	6185DA	Y		- TL -	473
	8670	980	49800	5630	1.03	I	13200	59000	3	6190DA	Y	A	- TL -	473
2.59	4340	490	44200	5000	-	-	9360	41700	3	6185DA	Y		- TL -	559
	8670	980	56500	6380	-	-	13200	59000	3	6190DA	Y		- TL -	559
2.23	4340	490	44200	5000	-	-	9340	41600	3	6185DA	Y		- TL -	649
	8670	980	56500	6380	-	-	13200	58600	3	6190DA	Y		- TL -	649
			68400	7730	0.94	-	13100	58200	3	6195DA	Y		- TL -	649
1.98	8670	980	56500	6380	-	-	13200	59000	3	6190DA	Y		- TL -	731
			70400	7960	0.84	-	13200	59000	3	6195DA	Y		- TL -	731
1.72	8670	980	56500	6380	-	-	13200	59000	3	6190DA	Y		- TL -	841
			70400	7960	-	-	13200	59000	3	6195DB	Y		- TL -	841
	19100	2160	81700	9230	0.84	-	18900	84100	3	6205DB	Y		- TL -	841
	23400	2650	88500	10000	1.15	I	23400	104000	3	6215DA	Y	A	- TL -	841

Note: [1] Contact Sumitomo for dimensions.

TORQUE LIMITER GEARMOTOR SELECTION TABLES – 50 Hz

3 HP, 2.2 kW, 50 Hz, 1450 RPM (con't.)

Output Speed	Min. Preset Output Torque		Max. Preset Output Torque		Service Factor		Overhung Load		Selection[1]					
RPM	in•lb	N•m	in•lb	N•m	SF	AGMA Class	lb	N	HP Symbol	Frame Size	Shaft Spec.	AGMA Class		Ratio
1.45	8670	980	70400	7960	-	-	13000	58100	3	6195DA	Y		- TL -	1003
	19100	2160	82300	9300	-	-	18900	84100	3	6205DB	Y		- TL -	1003
	23400	2650	105000	11900	0.97	-	23400	104000	3	6215DA	Y		- TL -	1003
1.16	19100	2160	82300	9300	-	-	18900	84100	3	6205DB	Y		- TL -	1247
	23400	2650	112000	12700	-	-	23400	104000	3	6215DA	Y		- TL -	1247
	30300	3430	131000	14800	0.98	-	32600	145000	3	6225DA	Y		- TL -	1247
0.980	23400	2650	100000	11300	-	-	23400	104000	3	6215DA	Y		- TL -	1479
	30300	3430	134000	15100	-	-	32600	145000	3	6225DA	Y		- TL -	1479
	42600	4810	152000	17200	0.89	-	40200	179000	3	6235DA	Y		- TL -	1479
0.784	30300	3430	142000	16000	-	-	32600	145000	3	6225DA	Y		- TL -	1849
	39000	4410	181000	20500	0.85	-	40200	179000	3	6235DA	Y		- TL -	1849
	47800	5400	195000	22000	1.07	I	46700	208000	3	6245DA	Y	A	- TL -	1849
0.702	30300	3430	141000	15900	-	-	32600	145000	3	6225DA	Y		- TL -	2065
	39000	4410	181000	20500	-	-	40200	179000	3	6235DA	Y		- TL -	2065
	47800	5400	218000	24600	0.96	-	46700	208000	3	6245DA	Y		- TL -	2065
0.572	39000	4410	181000	20500	-	-	40200	179000	3	6235DA	Y		- TL -	2537
	47800	5400	228000	25800	-	-	46700	208000	3	6245DA	Y		- TL -	2537
0.476	43400	4910	152000	17200	-	-	40200	179000	3	6235DA	Y		- TL -	3045
			200000	22600	-	-	46700	208000	3	6245DA	Y		- TL -	3045
0.417	39000	4410	181000	20500	-	-	40200	179000	3	6235DA	Y		- TL -	3481
	47800	5400	228000	25800	-	-	46700	208000	3	6245DA	Y		- TL -	3481
0.327	43400	4910	152000	17200	-	-	40200	179000	3	6235DA	Y		- TL -	4437
	47800	5400	200000	22600	-	-	46700	208000	3	6245DA	Y		- TL -	4437
0.282	39000	4410	181000	20500	-	-	40200	179000	3	6235DA	Y		- TL -	5133
	47800	5400	228000	25800	-	-	46700	208000	3	6245DA	Y		- TL -	5133
0.235	44200	5000	152000	17200	-	-	40200	179000	3	6235DA	Y		- TL -	6177
	47800	5400	200000	22600	-	-	46700	208000	3	6245DA	Y		- TL -	6177
0.192	44200	5000	152000	17200	-	-	40200	179000	3	6235DA	Y		- TL -	7569
	47800	5400	200000	22600	-	-	46700	208000	3	6245DA	Y		- TL -	7569
0.157	65100	7360	288000	32500	-	-	57900	258000	3	6255TB	Y		- TL -	9251
0.133	86800	9810	407000	46000	-	-	62000	276000	3	6265TA	Y		- TL -	10933
0.106	121000	13700	407000	46000	-	-	62000	276000	3	6265TA	Y		- TL -	13629
0.089	91100	10300	407000	46000	-	-	62000	276000	3	6265TA	Y		- TL -	16211
0.071	130000	14700	603000	68200	-	-	55700	248000	3	6275TA	Y		- TL -	20339
0.060	130000	14700	603000	68200	-	-	55700	248000	3	6275TA	Y		- TL -	24037
0.052	130000	14700	603000	68200	-	-	55700	248000	3	6275TA	Y		- TL -	27907

Note: [1] Contact Sumitomo for dimensions.

5 HP, 3.7 kW, 50 Hz, 1450 RPM

Output Speed	Min. Preset Output Torque		Max. Preset Output Torque		Service Factor		Overhung Load		Selection[1]					
RPM	in•lb	N•m	in•lb	N•m	SF	AGMA Class	lb	N	HP Symbol	Frame Size	Shaft Spec.	AGMA Class		Ratio
242	442	50	1150	130	1.37	II	1170	5220	5	6120	Y	B	- TL -	6
181	442	50	1500	170	1.37	II	1300	5810	5	6120	Y	B	- TL -	8
132	442	50	2120	240	1.37	II	1480	6590	5	6120	Y	B	- TL -	11
112	442	50	2480	280	1.37	II	1530	6800	5	6120	Y	B	- TL -	13
96.7	442	50	2790	315	1.37	II	1640	7290	5	6120	Y	B	- TL -	15
85.3	885	100	3270	370	1.96	III	1990	8860	5	6130	Y	C	- TL -	17
69.0	885	100	4030	455	1.61	III	2120	9460	5	6130	Y	C	- TL -	21
58.0	885	100	4820	545	1.55	II	2200	9810	5	6135	Y	B	- TL -	25
50.0	885	100	5570	630	1.16	I	2310	10300	5	6130	Y	A	- TL -	29
41.4	885	100	6240	705	1.11	I	2420	10800	5	6135	Y	A	- TL -	35
33.7	1770	200	8270	935	1.74	III	4580	20400	5	6160	Y	C	- TL -	43
28.4	1770	200	9820	1110	1.49	II	4740	21100	5	6160	Y	B	- TL -	51
24.6	1770	200	11400	1290	1.19	I	4960	22100	5	6160	Y	A	- TL -	59
22.0	1770	200	11700	1320	1.22	I	4960	22100	5	6160DC	Y	A	- TL -	66
18.6	1770	200	13800	1560	1.03	I	4960	22100	5	6160DC	Y	A	- TL -	78
16.5	1770	200	15600	1760	0.91	-	4960	22100	5	6160DC	Y		- TL -	88
13.9	1770	200	18400	2080	0.92	-	4960	22100	5	6165DC	Y		- TL -	104
12.0	2570	290	21400	2420	0.95	-	6620	29500	5	6170DC	Y		- TL -	121
10.1	2570	290	25300	2860	1.00	I	6620	29500	5	6175DC	Y	A	- TL -	143
8.79	2570	290	27900	3150	0.87	-	6620	29500	5	6175DC	Y		- TL -	165
	4340	490	29200	3300	1.12	I	9360	41700	5	6180DB	Y	A	- TL -	165
7.44	2570	290	27900	3150	-	-	6620	29500	5	6175DC	Y		- TL -	195
	4340	490	34500	3900	0.91	-	9360	41700	5	6180DB	Y		- TL -	195
6.28	4340	490	41000	4630	0.98	-	9360	41700	5	6185DB	Y		- TL -	231
5.31	4340	490	44200	5000	0.84	-	9360	41700	5	6185DB	Y		- TL -	273
4.55	8670	980	56500	6380	0.91	-	13200	59000	5	6190DA	Y		- TL -	319
3.85	8670	980	56500	6380	-	-	13200	59000	5	6190DA	Y		- TL -	377
			66800	7550	0.96	-	13200	59000	5	6195DB	Y		- TL -	377
3.07	8670	980	70400	7960	-	-	13200	59000	5	6195DA	Y		- TL -	473
	19100	2160	82300	9300	-	-	18900	84100	5	6205DB	Y		- TL -	473
2.59	19100	2160	82300	9300	-	-	18900	84100	5	6205DB	Y		- TL -	559
	23400	2650	99100	11200	1.03	I	23400	104000	5	6215DA	Y	A	- TL -	559
2.23	23400	2650	112000	12700	0.89	-	23400	104000	5	6215DA	Y		- TL -	649
	30300	3430	115000	13000	1.12	I	32600	145000	5	6225DA	Y	A	- TL -	649
1.98	23400	2650	112000	12700	-	-	23400	104000	5	6215DA	Y		- TL -	731
	30300	3430	129000	14600	1.00	I	32600	145000	5	6225DA	Y	A	- TL -	731
1.72	23400	2650	112000	12700	-	-	23400	104000	5	6215DA	Y		- TL -	841
	30300	3430	130000	14700	0.82	-	32600	145000	5	6225DA	Y		- TL -	841
	39000	4410	149000	16800	1.02	I	40200	179000	5	6235DA	Y	A	- TL -	841
1.45	30300	3430	141000	15900	-	-	32600	145000	5	6225DA	Y		- TL -	1003
	39000	4410	178000	20100	0.93	-	40200	179000	5	6235DA	Y		- TL -	1003
1.16	39000	4410	181000	20500	-	-	40200	179000	5	6235DA	Y		- TL -	1247
	47800	5400	221000	25000	0.94	-	46700	208000	5	6245DA	Y		- TL -	1247
0.980	47800	5400	200000	22600	-	-	46700	208000	5	6245DA	Y		- TL -	1479
	109000	12300	262000	29600	0.96	-	57900	258000	5	6255DA	Y		- TL -	1479
0.784	65100	7360	305000	34500	0.85	-	57900	258000	5	6255DA	Y		- TL -	1849
0.702	73800	8340	305000	34500	-	-	57900	258000	5	6255DA	Y		- TL -	2065
0.572	73800	8340	305000	34500	-	-	57900	258000	5	6255DA	Y		- TL -	2537
0.476	109000	12300	274000	31000	-	-	57900	258000	5	6255DA	Y		- TL -	3045
0.417	74700	8440	305000	34500	-	-	57900	258000	5	6255DA	Y		- TL -	3481
0.327	113000	12800	274000	31000	-	-	57900	258000	5	6255DA	Y		- TL -	4437
0.282	126000	14200	305000	34500	-	-	57900	258000	5	6255DA	Y		- TL -	5133
0.235	187000	21100	274000	31000	-	-	57900	258000	5	6255DB	Y		- TL -	6177
0.157	86800	9810	407000	46000	-	-	62000	276000	5	6265TA	Y		- TL -	9251
0.133	130000	14700	603000	68200	-	-	55700	248000	5	6275TA	Y		- TL -	10933
0.106	130000	14700	603000	68200	-	-	55700	248000	5	6275TA	Y		- TL -	13629
0.089	130000	14700	603000	68200	-	-	55700	248000	5	6275TA	Y		- TL -	16211

Note: [1] Contact Sumitomo for dimensions.

TORQUE LIMITER GEARMOTOR SELECTION TABLES – 50 Hz

7.5 HP, 5.5 kW, 50 Hz, 1450 RPM

Output Speed	Min. Preset Output Torque		Max. Preset Output Torque		Service Factor		Overhung Load		Selection[1]					
RPM	in•lb	N•m	in•lb	N•m	SF	AGMA Class	lb	N	HP Symbol	Frame Size	Shaft Spec.	AGMA Class		Ratio
242	442	50	1680	190	1.27	I	1160	5150	8	6125	Y	A	- TL -	6
181	442	50	2260	255	1.26	I	1290	5730	8	6125	Y	A	- TL -	8
132	885	100	3140	355	1.71	III	1730	7700	8	6130	Y	C	- TL -	11
112	885	100	3720	420	1.71	III	1800	8000	8	6130	Y	C	- TL -	13
96.7	885	100	4290	485	1.41	II	1830	8150	8	6130	Y	B	- TL -	15
85.3	885	100	4870	550	1.51	II	1960	8740	8	6135	Y	B	- TL -	17
69.0	885	100	6020	680	1.22	I	2090	9290	8	6135	Y	A	- TL -	21
58.0	1770	200	7170	810	1.79	III	3840	17100	8	6160	Y	C	- TL -	25
50.0	1770	200	8270	935	1.74	III	4000	17800	8	6160	Y	C	- TL -	29
41.4	1770	200	10000	1130	1.46	II	4240	18900	8	6160	Y	B	- TL -	35
33.7	1770	200	11400	1290	1.17	I	4540	20200	8	6160	Y	A	- TL -	43
	2570	290	12300	1390	1.65	III	5120	22800	8	6170	Y	C	- TL -	43
28.4	2570	290	14600	1650	1.39	II	5340	23800	8	6170	Y	B	- TL -	51
24.6	2570	290	16900	1910	1.51	II	5590	24900	8	6175	Y	B	- TL -	59
22.0	1770	200	15600	1760	-	-	4960	22100	8	6160DC	Y		- TL -	66
			17300	1960	0.98	-	4960	22100	8	6165DC	Y		- TL -	66
18.6	1770	200	15600	1760	-	-	4960	22100	8	6160DC	Y		- TL -	78
			18600	2100	-	-	4960	22100	8	6165DC	Y		- TL -	78
			20500	2320	0.99	-	6240	27800	8	6170DC	Y		- TL -	78
16.5	1770	200	15600	1760	-	-	4960	22100	8	6160DC	Y		- TL -	88
			18600	2100	-	-	4960	22100	8	6165DC	Y		- TL -	88
	2570	290	21100	2380	-	-	6580	29300	8	6170DC	Y		- TL -	88
	4340	490	23200	2620	1.42	II	8780	39100	8	6180DB	Y	B	- TL -	88
13.9	1770	200	18600	2100	-	-	4960	22100	8	6165DC	Y		- TL -	104
	2570	290	22400	2530	-	-	6620	29500	8	6170DC	Y		- TL -	104
			25000	2820	0.93	-	6620	29500	8	6175DC	Y		- TL -	104
	4340	490	27400	3100	1.20	I	9120	40600	8	6180DB	Y	A	- TL -	104
12.0	2570	290	21800	2460	-	-	6620	29500	8	6170DC	Y		- TL -	121
	4340	490	31900	3600	1.03	I	9360	41700	8	6180DB	Y	A	- TL -	121
10.1	2570	290	25700	2900	-	-	6620	29500	8	6175DC	Y		- TL -	143
	4340	490	35900	4060	-	-	9360	41700	8	6180DB	Y		- TL -	143
			37700	4260	1.05	I	9360	41700	8	6185DB	Y	A	- TL -	143
8.79	2570	290	27900	3150	-	-	6620	29500	8	6175DC	Y		- TL -	165
	4340	490	35900	4060	-	-	9360	41700	8	6180DB	Y		- TL -	165
			43400	4910	0.92	-	9360	41700	8	6185DB	Y		- TL -	165
7.44	4340	490	35900	4060	-	-	9360	41700	8	6180DB	Y		- TL -	195
			43500	4920	-	-	9360	41700	8	6185DB	Y		- TL -	195
	8670	980	51300	5800	1.00	I	13200	59000	8	6190DB	Y	A	- TL -	195
6.28	4340	490	44200	5000	-	-	9360	41700	8	6185DB	Y		- TL -	231
	8670	980	56500	6380	-	-	13200	59000	8	6190DB	Y		- TL -	231
			60900	6880	1.06	I	13200	59000	8	6195DB	Y	A	- TL -	231
5.31	8670	980	56500	6380	-	-	13200	59000	8	6190DB	Y		- TL -	273
			70400	7960	-	-	13200	59000	8	6195DB	Y		- TL -	273
4.55	8670	980	56500	6380	-	-	13200	59000	8	6190DA	Y		- TL -	319
			70400	7960	-	-	13200	59000	8	6195DB	Y		- TL -	319
	19100	2160	81700	9230	0.89	-	18900	84100	8	6205DB	Y		- TL -	319
	23400	2650	84000	9490	1.22	I	23400	104000	8	6215DA	Y	A	- TL -	319

Note: [1] Contact Sumitomo for dimensions.

7.5 HP, 5.5 kW, 50 Hz, 1450 RPM

Output Speed	Min. Preset Output Torque		Max. Preset Output Torque		Service Factor		Overhung Load		Selection[1]					
RPM	in•lb	N•m	in•lb	N•m	SF	AGMA Class	lb	N	HP Symbol	Frame Size	Shaft Spec.	AGMA Class		Ratio
3.85	8670	980	70400	7960	-	-	13200	59000	8	6195DB	Y		- TL -	377
	19100	2160	81700	9230	-	-	18900	84100	8	6205DB	Y		- TL -	377
	23400	2650	99100	11200	1.03	I	23400	104000	8	6215DA	Y	A	- TL -	377
3.07	19100	2160	82300	9300	-	-	18900	84100	8	6205DB	Y		- TL -	473
	23400	2650	112000	12700	0.82	-	23400	104000	8	6215DA	Y		- TL -	473
	30300	3430	125000	14100	1.04	I	32600	145000	8	6225DA	Y	A	- TL -	473
2.59	23400	2650	112000	12700	-	-	23400	104000	8	6215DA	Y		- TL -	559
	30300	3430	142000	16000	0.88	-	32600	145000	8	6225DA	Y		- TL -	559
	39000	4410	147000	16600	1.12	I	40200	179000	8	6235DA	Y	A	- TL -	559
2.23	23400	2650	112000	12700	-	-	23400	104000	8	6215DA	Y		- TL -	649
	30300	3430	141000	15900	-	-	32600	145000	8	6225DA	Y		- TL -	649
	39000	4410	171000	19300	0.97	-	40200	179000	8	6235DA	Y		- TL -	649
1.98	30300	3430	142000	16000	-	-	32600	145000	8	6225DA	Y		- TL -	731
	39000	4410	181000	20500	0.86	-	40200	179000	8	6235DA	Y		- TL -	731
	47800	5400	193000	21800	1.08	I	46700	208000	8	6245DA	Y	A	- TL -	731
1.72	39000	4410	167000	18900	-	-	40200	179000	8	6235DA	Y		- TL -	841
	47800	5400	221000	25000	0.94	-	46700	208000	8	6245DA	Y		- TL -	841
1.45	39000	4410	181000	20500	-	-	40200	179000	8	6235DA	Y		- TL -	1003
	47800	5400	228000	25800	-	-	46700	208000	8	6245DA	Y		- TL -	1003
	71100	8040	265000	29900	1.06	I	57900	258000	8	6255DA	Y	A	- TL -	1003
1.16	47800	5400	228000	25800	-	-	46700	208000	8	6245DA	Y		- TL -	1247
	65100	7360	305000	34500	0.85	-	57900	258000	8	6255DA	Y		- TL -	1247
	91100	10300	328000	37100	1.13	I	62000	276000	8	6265DA	Y	A	- TL -	1247
0.980	109000	12300	274000	31000	-	-	57900	258000	8	6255DA	Y		- TL -	1479
	178000	20100	389000	44000	0.91	-	62000	276000	8	6265DA	Y		- TL -	1479
0.784	65100	7360	305000	34500	-	-	57900	258000	8	6255DA	Y		- TL -	1849
	91100	10300	407000	46000	-	-	62000	276000	8	6265DA	Y		- TL -	1849
	130000	14700	487000	55000	1.13	I	55700	248000	8	6275DA	Y	A	- TL -	1849
0.702	126000	14200	407000	46000	-	-	62000	276000	8	6265DA	Y		- TL -	2065
	130000	14700	544000	61500	1.01	I	55700	248000	8	6275DA	Y	A	- TL -	2065
0.572	126000	14200	407000	46000	-	-	62000	276000	8	6265DA	Y		- TL -	2537
	130000	14700	603000	68200	-	-	55700	248000	8	6275DA	Y		- TL -	2537
0.476	130000	14700	389000	44000	-	-	62000	276000	8	6265DA	Y		- TL -	3045
			603000	68200	-	-	55000	245000	8	6275DA	Y		- TL -	3045
0.417	126000	14200	407000	46000	-	-	62000	276000	8	6265DA	Y		- TL -	3481
	130000	14700	603000	68200	-	-	55700	248000	8	6275DA	Y		- TL -	3481
0.327	182000	20600	389000	44000	-	-	62000	276000	8	6265DA	Y		- TL -	4437
			603000	68200	-	-	55000	245000	8	6275DA	Y		- TL -	4437
0.282	126000	14200	407000	46000	-	-	62000	276000	8	6265DA	Y		- TL -	5133
	182000	20600	603000	68200	-	-	55000	245000	8	6275DA	Y		- TL -	5133
0.235	187000	21100	389000	44000	-	-	62000	276000	8	6265DA	Y		- TL -	6177
	187000	21100	603000	68200	-	-	55000	245000	8	6275DA	Y		- TL -	6177
0.192	187000	21100	389000	44000	-	-	62000	276000	8	6265DA	Y		- TL -	7569
			603000	68200	-	-	55000	245000	8	6275DA	Y		- TL -	7569
0.157	130000	14700	603000	68200	-	-	55700	248000	8	6275TA	Y		- TL -	9251

Note: [1] Contact Sumitomo for dimensions.

TORQUE LIMITER GEARMOTOR SELECTION TABLES – 50 Hz

10 HP, 7.5 kW, 50 Hz, 1450 RPM

Output Speed	Min. Preset Output Torque		Max. Preset Output Torque		Service Factor		Overhung Load		Selection[1]					
RPM	in•lb	N•m	in•lb	N•m	SF	AGMA Class	lb	N	HP Symbol	Frame Size	Shaft Spec.	AGMA Class		Ratio
242	885	100	2340	265	1.25	I	1350	6000	10	6130	Y	A	- TL -	6
181	885	100	3100	350	1.25	I	1500	6670	10	6130	Y	A	- TL -	8
132	885	100	4290	485	1.25	I	1700	7590	10	6130	Y	A	- TL -	11
112	885	100	5040	570	1.25	I	1770	7890	10	6130	Y	A	- TL -	13
96.7	885	100	5840	660	1.20	I	1800	8030	10	6135	Y	A	- TL -	15
85.3	885	100	6060	685	1.11	I	1940	8640	10	6135	Y	A	- TL -	17
	1770	200	6640	750	1.75	III	3410	15200	10	6160	Y	C	- TL -	17
69.0	1770	200	8180	925	1.72	III	3640	16200	10	6160	Y	C	- TL -	21
58.0	1770	200	9730	1100	1.31	II	3790	16900	10	6160	Y	B	- TL -	25
50.0	1770	200	11300	1280	1.52	II	3950	17600	10	6165	Y	B	- TL -	29
41.4	2570	290	13700	1550	1.49	II	4780	21300	10	6170	Y	B	- TL -	35
33.7	2570	290	16800	1900	1.51	II	5070	22600	10	6175	Y	B	- TL -	43
28.4	2570	290	19000	2150	1.02	I	5280	23500	10	6170	Y	A	- TL -	51
	4340	490	19900	2250	1.60	III	7140	31800	10	6180	Y	C	- TL -	51
24.6	4340	490	20900	2360	1.30	II	7480	33300	10	6180	Y	B	- TL -	59
22.0	4340	490	23700	2680	1.38	II	7950	35400	10	6180DB	Y	B	- TL -	66
18.6	4340	490	28000	3170	1.17	I	8240	36700	10	6180DB	Y	A	- TL -	78
16.5	4340	490	31600	3570	1.04	I	8690	38700	10	6180DB	Y	A	- TL -	88
13.9	4340	490	35900	4060	-	-	9030	40200	10	6180DB	Y		- TL -	104
			37300	4220	1.06	I	9000	40100	10	6185DB	Y	A	- TL -	104
12.0	4340	490	35900	4060	-	-	9360	41700	10	6180DB	Y		- TL -	121
			42600	4810	0.89	-	9360	41700	10	6185DB	Y		- TL -	121
	8670	980	43400	4910	1.19	I	13200	59000	10	6190DB	Y	A	- TL -	121
10.1	4340	490	35900	4060	-	-	9360	41700	10	6180DB	Y		- TL -	143
			43400	4900	-	-	9360	41700	10	6185DB	Y		- TL -	143
	8670	980	51300	5800	1.00	I	13200	58900	10	6190DB	Y	A	- TL -	143
8.79	4340	490	43500	4920	-	-	9360	41700	10	6185DB	Y		- TL -	165
	8670	980	56500	6380	-	-	13200	58900	10	6190DB	Y		- TL -	165
			59300	6700	1.08	I	13200	58700	10	6195DB	Y	A	- TL -	165
7.44	8670	980	56500	6380	-	-	13200	58900	10	6190DB	Y		- TL -	195
			64600	7300	0.91	-	13100	58500	10	6195DB	Y		- TL -	195
6.28	8670	980	56500	6380	-	-	13200	59000	10	6190DB	Y		- TL -	231
			70400	7960	-	-	13200	59000	10	6195DB	Y		- TL -	231
	19100	2160	82000	9270	0.90	-	18900	84100	10	6205DB	Y		- TL -	231
	23400	2650	83000	9380	1.22	I	23400	104000	10	6215DA	Y	A	- TL -	231
5.31	8670	980	70400	7960	-	-	13200	59000	10	6195DB	Y		- TL -	273
	19100	2160	82000	9270	-	-	18900	84100	10	6205DB	Y		- TL -	273
	23400	2650	90200	10200	1.03	I	23400	104000	10	6215DA	Y	A	- TL -	273
			98200	11100	1.03	I	23400	104000	10	6215DB	Y	A	- TL -	273
4.55	19100	2160	81700	9230	-	-	18900	84100	10	6205DB	Y		- TL -	319
	23400	2650	112000	12700	0.89	-	23400	104000	10	6215DA	Y		- TL -	319
	30300	3430	114000	12900	1.06	I	32600	145000	10	6225DA	Y	A	- TL -	319
3.85	23400	2650	112000	12700	-	-	23400	104000	10	6215DA	Y		- TL -	377
	36500	4120	125000	14100	0.90	-	32600	145000	10	6225DA	Y		- TL -	377
	39000	4410	135000	15300	1.13	I	40200	179000	10	6235DA	Y	A	- TL -	377
3.07	30300	3430	142000	16000	-	-	32600	145000	10	6225DA	Y		- TL -	473
	39000	4410	170000	19200	0.97	-	40200	179000	10	6235DA	Y		- TL -	473

Note: [1] Contact Sumitomo for dimensions.

10 HP, 7.5 kW, 50 Hz, 1450 RPM

Output Speed	Min. Preset Output Torque		Max. Preset Output Torque		Service Factor		Overhung Load		Selection[1]					
RPM	in•lb	N•m	in•lb	N•m	SF	AGMA Class	lb	N	HP Symbol	Frame Size	Shaft Spec.	AGMA Class		Ratio
2.59	30300	3430	142000	16000	-	-	32600	145000	10	6225DA	Y		- TL -	559
	39000	4410	181000	20500	0.82	-	40200	179000	10	6235DA	Y		- TL -	559
	47800	5400	201000	22700	1.04	I	46700	208000	10	6245DA	Y	A	- TL -	559
2.23	39000	4410	181000	20500	-	-	40200	179000	10	6235DA	Y		- TL -	649
	47800	5400	228000	25800	0.89	-	46700	208000	10	6245DA	Y		- TL -	649
	73800	8340	233000	26300	1.20	I	57900	258000	10	6255DA	Y	A	- TL -	649
1.98	39000	4410	181000	20500	-	-	40200	179000	10	6235DA	Y		- TL -	731
	47800	5400	228000	25800	-	-	46700	208000	10	6245DA	Y		- TL -	731
	65100	7360	263000	29700	1.06	I	57900	258000	10	6255DA	Y	A	- TL -	731
1.72	47800	5400	228000	25800	-	-	46700	208000	10	6245DA	Y		- TL -	841
	73800	8340	288000	32500	0.87	-	57900	258000	10	6255DA	Y		- TL -	841
	86800	9810	302000	34100	1.23	I	62000	276000	10	6265DA	Y	A	- TL -	841
1.45	71100	8040	305000	34500	-	-	57900	258000	10	6255DA	Y		- TL -	1003
	121000	13700	360000	40700	1.03	I	62000	276000	10	6265DA	Y	A	- TL -	1003
1.16	65100	7360	305000	34500	-	-	57900	258000	10	6255DA	Y		- TL -	1247
	91100	10300	407000	46000	0.83	-	62000	276000	10	6265DA	Y		- TL -	1247
	130000	14700	448000	50600	1.23	I	55700	248000	10	6275DA	Y	A	- TL -	1247
0.980	178000	20100	389000	44000	-	-	62000	276000	10	6265DA	Y		- TL -	1479
			531000	60000	1.04	I	55700	248000	10	6275DA	Y	A	- TL -	1479
0.784	130000	14700	603000	68200	0.83	-	55700	248000	10	6275DA	Y		- TL -	1849
0.702	130000	14700	603000	68200	-	-	55700	248000	10	6275DA	Y		- TL -	2065

15 HP, 11 kW, 50 Hz, 1450 RPM

Output Speed	Min. Preset Output Torque		Max. Preset Output Torque		Service Factor		Overhung Load		Selection[1]					
RPM	in•lb	N•m	in•lb	N•m	SF	AGMA Class	lb	N	HP Symbol	Frame Size	Shaft Spec.	AGMA Class		Ratio
33.7	8670	980	24700	2790	1.90	III	9560	42600	15	6190	Y	C	- TL -	43
28.4	8670	980	29200	3300	1.65	III	9990	44500	15	6190	Y	C	- TL -	51
24.6	8670	980	33800	3820	1.39	II	10400	46500	15	6190	Y	B	- TL -	59
2.23	126000	14200	342000	38600	1.09	I	62000	276000	15	6265DA	Y	A	- TL -	649
1.98	95600	10800	385000	43500	0.97	-	62000	276000	15	6265DA	Y		- TL -	731
1.72	86800	9810	407000	46000	0.84	-	62000	276000	15	6265DA	Y		- TL -	841
	130000	14700	443000	50100	1.24	I	55700	248000	15	6275DA	Y	A	- TL -	841
1.45	121000	13700	407000	46000	-	-	62000	276000	15	6265DA	Y		- TL -	1003
	130000	14700	528000	59700	1.04	I	55700	248000	15	6275DA	Y	A	- TL -	1003
1.16	130000	14700	603000	68200	0.84	-	55700	248000	15	6275DA	Y		- TL -	1247
0.98	178000	20100	603000	68200	-	-	55000	245000	15	6275DA	Y		- TL -	1479

Note: [1] Contact Sumitomo for dimensions.

TORQUE LIMITER GEARMOTOR SELECTION TABLES – 50 Hz

20 HP, 15 kW, 50 Hz, 1450 RPM

Output Speed	Min. Preset Output Torque		Max. Preset Output Torque		Service Factor		Overhung Load		Selection[1]					
RPM	in•lb	N•m	in•lb	N•m	SF	AGMA Class	lb	N	HP Symbol	Frame Size	Shaft Spec.	AGMA Class		Ratio
41.4	8670	980	27300	3090	1.62	III	8850	39400	20	6190	Y	C	- TL -	35
33.7	8670	980	33600	3800	1.39	II	9520	42400	20	6190	Y	B	- TL -	43
3.07	91100	10300	340000	38400	1.09	I	62000	276000	20	6265DA	Y	A	- TL -	473
2.59	130000	14700	402000	45400	0.93	-	62000	276000	20	6265DA	Y		- TL -	559
2.23	126000	14200	407000	46000	0.80	-	62000	276000	20	6265DA	Y		- TL -	649
	130000	14700	466000	52700	1.18	I	55700	248000	20	6275DA	Y	A	- TL -	649
1.98	95600	10800	407000	46000	-	-	62000	276000	20	6265DA	Y		- TL -	731
	130000	14700	525000	59300	1.05	I	55700	248000	20	6275DA	Y	A	- TL -	731
1.72	86800	9810	407000	46000	-	-	62000	276000	20	6265DA	Y		- TL -	841
	130000	14700	603000	68200	0.91	-	55700	248000	20	6275DA	Y		- TL -	841
1.45	130000	14700	603000	68200	-	-	55700	248000	20	6275DA	Y		- TL -	1003

25 HP, 18.5 kW, 50 Hz, 1450 RPM

Output Speed	Min. Preset Output Torque		Max. Preset Output Torque		Service Factor		Overhung Load		Selection[1]					
RPM	in•lb	N•m	in•lb	N•m	SF	AGMA Class	lb	N	HP Symbol	Frame Size	Shaft Spec.	AGMA Class		Ratio
58.0	8670	980	24100	2720	1.90	III	7970	35500	25	6190	Y	C	- TL -	25
50.0	8670	980	28000	3160	1.66	III	8350	37200	25	6190	Y	C	- TL -	29
41.4	8670	980	33700	3810	1.31	II	8800	39200	25	6190	Y	B	- TL -	35
3.85	86800	9810	334000	37700	1.11	I	62000	276000	25	6265DA	Y	A	- TL -	377
3.07	91100	10300	407000	46000	0.89	-	62000	276000	25	6265DA	Y		- TL -	473
2.59	130000	14700	407000	46000	-	-	62000	276000	25	6265DA	Y		- TL -	559
			495000	56000	1.11	I	55700	248000	25	6275DA	Y	A	- TL -	559
2.23	130000	14700	575000	65000	0.96	-	55700	248000	25	6275DA	Y		- TL -	649
1.98	130000	14700	603000	68200	0.85	-	55700	248000	25	6275DA	Y		- TL -	731
1.72	130000	14700	603000	68200	-	-	55700	248000	25	6275DA	Y		- TL -	841

30 HP, 22 kW, 50 Hz, 1450 RPM

Output Speed	Min. Preset Output Torque		Max. Preset Output Torque		Service Factor		Overhung Load		Selection[1]					
RPM	in•lb	N•m	in•lb	N•m	SF	AGMA Class	lb	N	HP Symbol	Frame Size	Shaft Spec.	AGMA Class		Ratio
69.0	8670	980	24100	2720	1.86	III	7590	33800	30	6190	Y	C	- TL -	21
58.0	8670	980	28700	3240	1.60	III	7930	35300	30	6190	Y	C	- TL -	25
50.0	8670	980	33300	3760	1.40	II	8330	37100	30	6190	Y	B	- TL -	29
5.31	86800	9810	288000	32500	1.29	I	62000	276000	30	6265DA	Y	A	- TL -	273
4.55	86800	9810	336000	38000	1.11	I	62000	276000	30	6265DA	Y	A	- TL -	319
3.85	86800	9810	397000	44900	0.94	-	62000	276000	30	6265DA	Y		- TL -	377
3.07	91100	10300	407000	46000	-	-	62000	276000	30	6265DA	Y		- TL -	473
	130000	14700	498000	56300	1.11	I	55700	248000	30	6275DA	Y	A	- TL -	473
2.59	130000	14700	589000	66600	0.94	-	55700	248000	30	6275DA	Y		- TL -	559
2.23	130000	14700	603000	68200	0.81	-	55700	248000	30	6275DA	Y		- TL -	649
1.98	130000	14700	603000	68200	-	-	55700	248000	30	6275DA	Y		- TL -	731

Note: [1] Contact Sumitomo for dimensions.

40 HP, 30 kW, 50 Hz, 1450 RPM

Output Speed	Min. Preset Output Torque		Max. Preset Output Torque		Service Factor		Overhung Load		Selection[1]					
RPM	in•lb	N•m	in•lb	N•m	SF	AGMA Class	lb	N	HP Symbol	Frame Size	Shaft Spec.	AGMA Class		Ratio
112	8670	980	20400	2300	1.60	III	6330	28200	40	6195	Y	C	- TL -	13
96.7	8670	980	23400	2650	1.60	III	6650	29600	40	6195	Y	C	- TL -	15
85.3	8670	980	26500	3000	1.60	III	7010	31200	40	6195	Y	C	- TL -	17
12.0	65100	7360	173000	19600	1.28	I	43300	193000	40	6255DB	Y	A	- TL -	121
8.79	65100	7360	237000	26800	1.06	I	46300	206000	40	6255DB	Y	A	- TL -	165
7.44	65100	7360	276000	31200	0.90	-	48500	216000	40	6255DB	Y		- TL -	195
6.28	86800	9810	332000	37500	1.12	I	62000	276000	40	6265DA	Y	A	- TL -	231
4.55	86800	9810	407000	46000	0.81	-	62000	276000	40	6265DA	Y		- TL -	319
	130000	14700	458000	51800	1.20	I	55700	248000	40	6275DA	Y	A	- TL -	319
3.85	86800	9810	407000	46000	-	-	62000	276000	40	6265DA	Y		- TL -	377
	130000	14700	541000	61200	1.02	I	55700	248000	40	6275DA	Y	A	- TL -	377
3.07	130000	14700	603000	68200	0.81	-	55700	248000	40	6275DA	Y		- TL -	473

Note: [1] Contact Sumitomo for dimensions.

EXTENDED BASE MOUNT SM-CYCLO® DRIVES

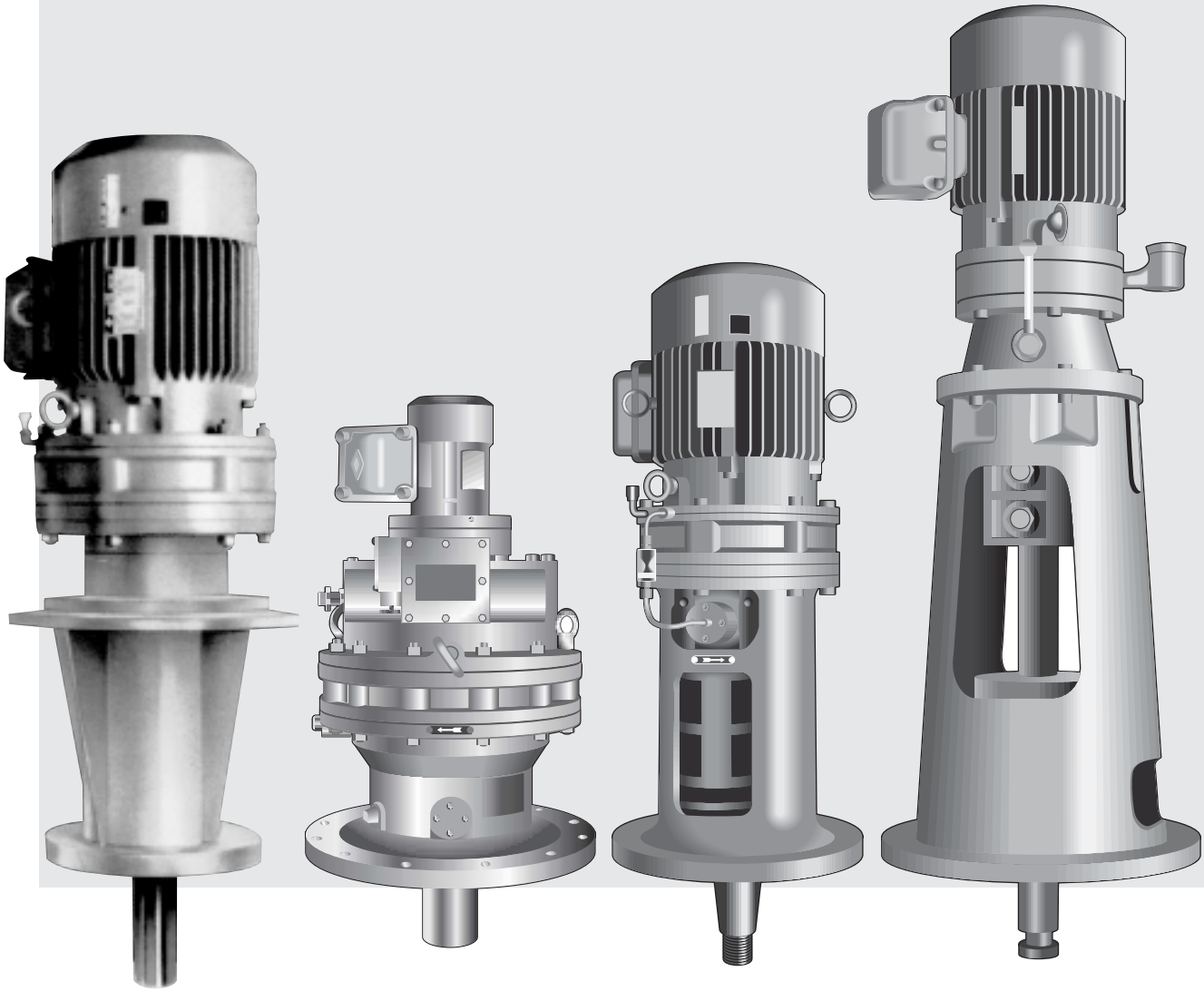

SPECIAL BASE MOUNT SM-CYCLO® DRIVE

The 14V and 17V Series SM-Cyclo® Drives are designed especially for applications such as agitator, mixer and reaction vessel drives in water treatment, chemical, pharmaceutical and food industries. The 17V Series is particularly well-suited for the drives of aerators. This series has a design that can be readily installed on tanks and/or vessels prepared by the users.

FEATURES: BENEFITS

1. EASY INSTALLATION
In the basic design of this series, the SM-Cyclo® Drive slow speed side is directly connected with the special lantern (vertical base) for the mixer shaft.

This series has all the SM-Cyclo® Drive advantages of high efficiency, compact size, robust and long life, and low noise level.

2. SIMPLE DESIGN
The electric motor, SM-Cyclo® Drive, and the vertical base are coaxially arranged, making a total configuration that is simple and easily accessible.

3. SIMPLE SHAFT CONNECTION
The mixing operation can be started by simply connecting to the mixer shaft.

4. LOW MAINTENANCE
Radial and thrust bearings are grease lubricated for easy maintenance.

STANDARD SERIES

SM-Cyclo® Drives with special base mount designed for mixer/agitator work are available in the two standard series illustrated below:

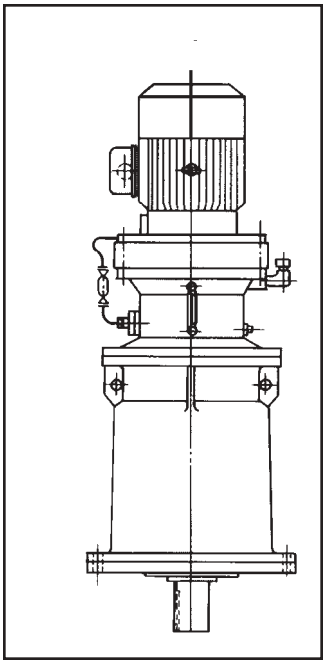

Fig. D-1 14V

This series has a shorter vertical base than the 17V making it more suitable for applications where the distance to the mixer blade is relatively short or for thinner liquid mixing.

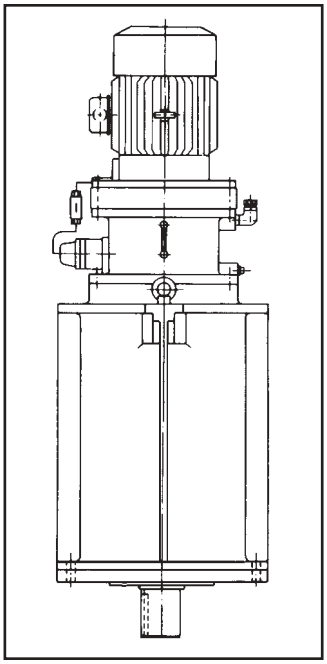

Fig. D-2 17V

The extension shaft and SM-Cyclo® Drive slow speed shaft are rigidly connected. The extension shaft is supported by two bearings at the vertical base (lantern).

CYCLO® DRIVE BENDING MOMENTS AND THRUST CAPACITIES

Table D-1. 14V Specifications

MODEL	BENDING MOMENT (LB. FT.)[1]	THRUST LOAD CAPACITY (LBS.)[2]	BEARING SPAN (IN INCHES)	
			X	Y
6090/5 6100/5 610H	255	220	7.48	.85
6120/5	470	375	9.45	.89
6130/5 6140/5	800	600	11.81	1.06
6160/5	1160	840	13.78	1.18
6170/5	1670	1100	15.75	1.14
6180/5	2170	1400	17.72	1.28
6190/5	2820	1720	19.69	1.36

Table D-2. 17V Specifications

MODEL	BENDING MOMENT (LB. FT.)[1]	THRUST LOAD CAPACITY (LBS.)[2]	BEARING SPAN (IN INCHES)	
			X	Y
6090/5 6100/5 610H	510	220	10.63	.89
6120/5	900	375	13.78	1.04
6130/5 6140/5	1590	590	17.32	1.16
6160/5	2300	840	19.68	1.36
6170/5	3250	1100	22.83	1.50
6180/5	4350	1390	25.59	1.61
6190/5	5550	1720	27.95	1.73
6205	7950	2200	31.50	1.97
6215	10,100	2640	35.43	2.17
6225	11,600	3080	37.40	2.17
6235	13,700	3520	39.37	2.32
6245	18,100	4620	45.28	2.76
6255	23,100	5500	49.21	2.91
6265	27,500	6600	53.15	3.54

Table D-3. Bearing Span

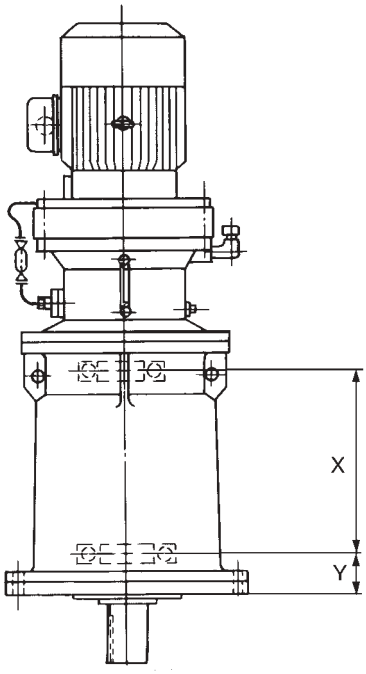

Notes: [1] Bending Moment is at the mounting surface.
[2] Both upward or downward thrust loads can be supported. Consult factory for greater thrust capacities. In double reduction models these loads are applicable only to the output portion of the speed reducer.

Fig. D-4
EXTENDED BASE ASSEMBLY

BEARING ARRANGEMENT

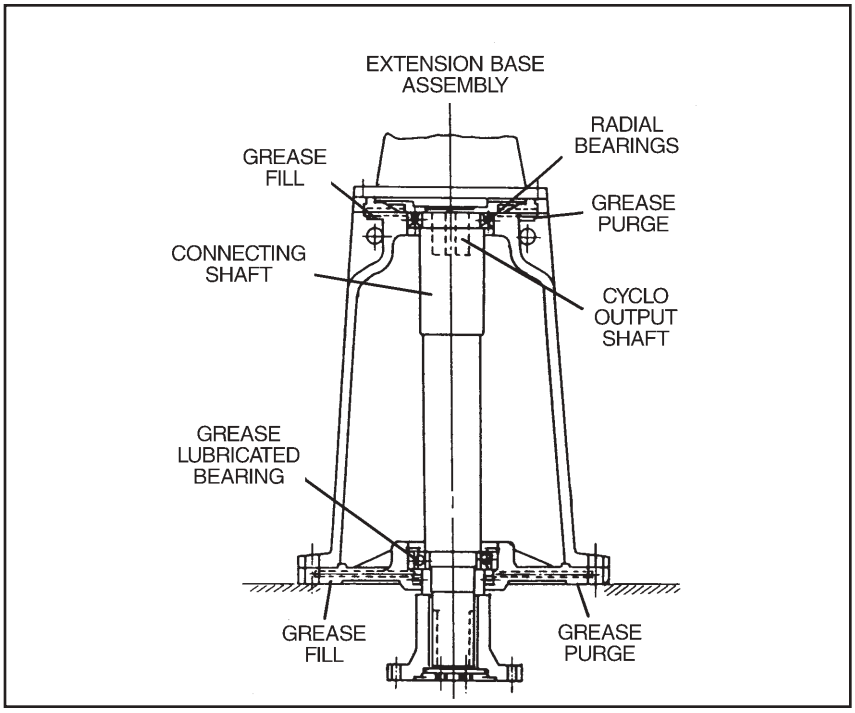

Fig. D-5
TYPICAL ASSEMBLY WITH MIXER SHAFT/BLADE

SHAFT ARRANGEMENT

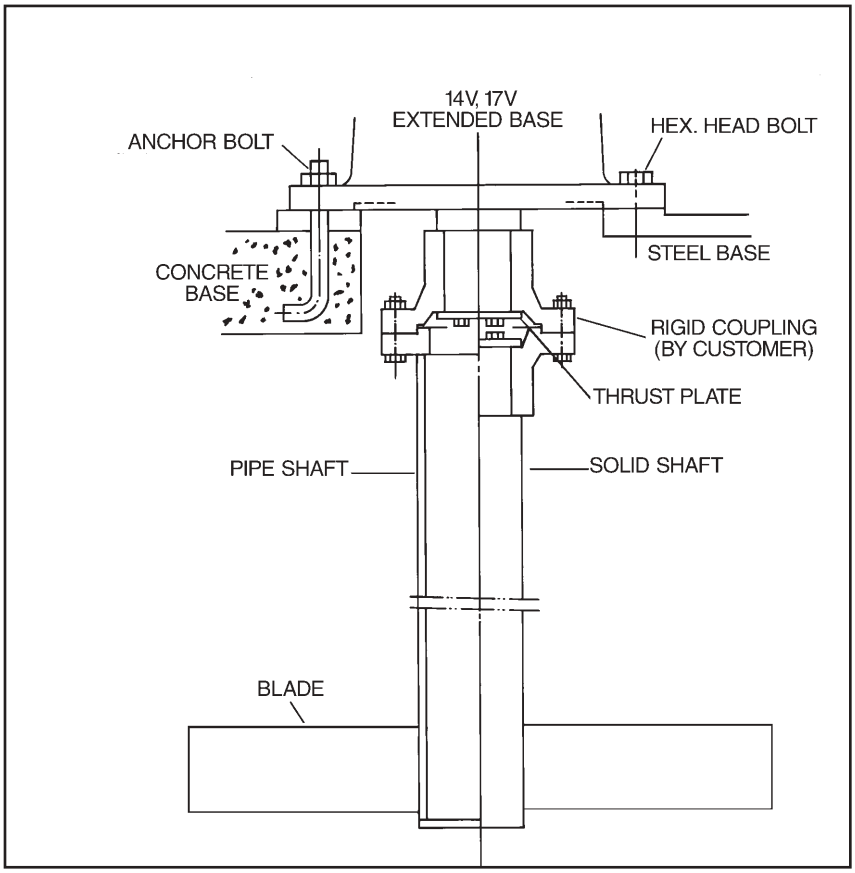

EXTENDED BASE DIMENSIONS

C14VM-609□Y~619□Y
C17VM-609□Y~619□Y

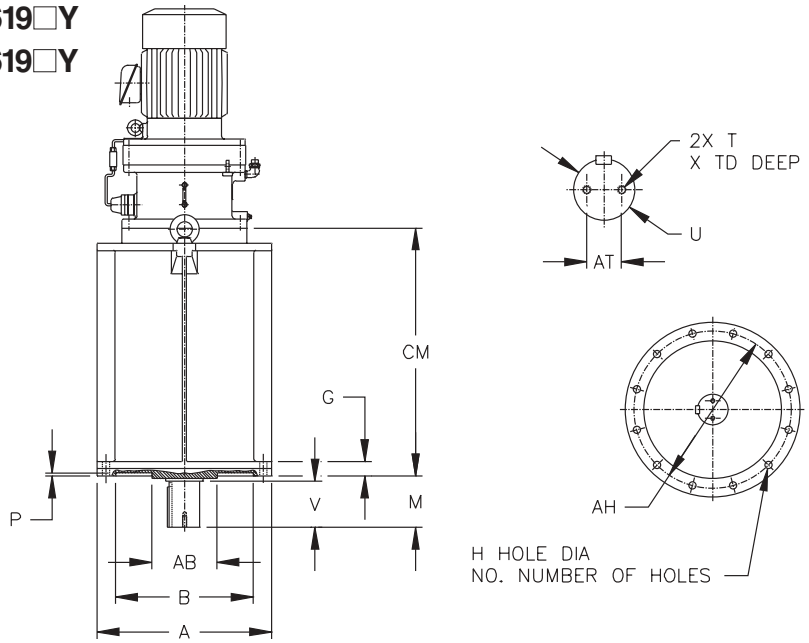

Inch (in)

MODEL C14VM	A	B	G	H	No.	M	P	AB	AH	CM	U h6	V	T	AT	TD	KEY
609□Y	9.06	6.302 6.299	1.26	0.43	6	2.60	0.197	4.13	7.87	9.3	1.250	2.17	12-28UNF	0.63	0.63	1/4 X 1/4 X 1.77
610□Y	9.06	6.302 6.299	1.26	0.43	6	2.60	0.197	4.13	7.87	9.3	1.250	2.17	12-28UNF	0.63	0.63	1/4 X 1/4 X 1.77
612□Y	10.24	7.089 7.087	1.38	0.55	6	3.07	0.197	4.33	9.06	11.4	1.625	2.56	12-28UNF	0.98	0.63	3/8 X 3/8 X 1.77
613□Y	12.60	8.271 8.268	1.46	0.71	6	3.82	0.197	5.51	11.02	14.1	2.000	3.23	5/16-18UNC	1.24	0.79	1/2 X 1/2 X 2.17
614□Y	12.60	8.271 8.268	1.46	0.71	6	3.82	0.197	5.51	11.02	14.1	2.000	3.23	5/16-18UNC	1.24	0.79	1/2 X 1/2 X 2.17
616□Y	14.57	10.630 10.627	1.57	0.71	6	4.45	0.236	6.30	12.99	16.2	2.375	3.74	3/8-16UNC	1.57	0.98	5/8 X 5/8 X 3.15
617□Y	17.32	12.799 12.795	1.69	0.71	8	4.84	0.236	8.27	15.75	18.1	2.750	4.13	3/8-16UNC	1.57	0.98	5/8 X 5/8 X 3.15
618□Y	19.69	14.374 14.370	1.85	0.87	6	5.51	0.236	9.06	17.72	18.9	3.125	4.72	1/2-13UNC	1.97	1.18	3/4 X 3/4 X 3.74
619□Y	22.83	17.326 17.323	1.97	0.87	8	5.91	0.236	10.24	20.47	22.8	3.625	5.12	1/2-13UNC	1.97	1.18	7/8 X 7/8 X 4.92

MODEL C17VM	A	B	G	H	No.	M	P	AB	AH	CM	U h6	V	T	AT	TD	KEY
609□Y	10.24	7.089 7.087	1.38	0.55	8	3.07	0.197	4.33	9.06	12.4	1.625	2.56	12-28UNF	0.98	0.63	3/8 X 3/8 X 1.77
610□Y	10.24	7.089 7.087	1.38	0.55	8	3.07	0.197	4.33	9.06	12.4	1.625	2.56	12-28UNF	0.98	0.63	3/8 X 3/8 X 1.77
612□Y	13.39	9.452 9.449	1.46	0.55	8	3.82	0.197	5.51	11.81	15.9	2.000	3.23	5/16-18UNC	1.24	0.79	1/2 X 1/2 X 2.17
613□Y	16.14	11.814 11.811	1.57	0.71	8	4.45	0.236	7.09	14.57	19.7	2.375	3.74	3/8-16UNC	1.57	0.98	5/8 X 5/8 X 3.15
614□Y	16.14	11.814 11.811	1.57	0.71	8	4.45	0.236	7.09	14.57	19.7	2.375	3.74	3/8-16UNC	1.57	0.98	5/8 X 5/8 X 3.15
616□Y	19.69	14.177 14.173	1.69	0.87	8	4.84	0.236	8.27	17.32	22.2	2.750	4.13	3/8-16UNC	1.57	0.98	5/8 X 5/8 X 3.15
617□Y	19.69	14.964 14.961	1.85	0.87	8	5.51	0.236	8.66	17.32	25.6	3.125	4.72	1/2-13UNC	1.97	1.18	3/4 X 3/4 X 3.74
618□Y	23.62	17.327 17.323	1.97	1.02	8	5.91	0.236	9.84	20.47	28.5	3.625	5.12	1/2-13UNC	1.97	1.18	7/8 X 7/8 X 4.92
619□Y	23.62	17.327 17.323	2.05	1.02	8	6.69	0.236	11.02	20.47	31.4	4.000	5.91	5/8-11UNC	2.48	1.57	1 X 1 X 5.12
6205Y	25.59	17.720 17.717	2.28	1.02	12	6.73	0.236	12.60	22.83	35.8	4.375	5.91	5/8-11UNC	2.48	1.57	1 X 1 X 5.12
6215Y	27.56	20.477 20.472	2.36	1.02	12	7.68	0.276	13.78	24.80	40.0	4.875	6.69	3/4-10UNC	3.15	1.97	1 1/4 X 7/8 X 5.91
6225Y	28.74	22.839 22.835	2.48	1.30	12	8.46	0.276	14.57	25.98	42.3	5.000	7.48	3/4-10UNC	3.15	1.97	1 1/4 X 7/8 X 6.50
6235Y	31.50	24.807 24.803	2.60	1.30	12	9.25	0.276	15.35	28.35	44.7	5.500	8.27	3/4-10UNC	3.15	1.97	1 1/4 X 7/8 X 6.50
6245Y	33.46	25.989 25.984	2.48	1.54	12	9.65	0.276	15.75	29.92	51.4	6.250	9.06	1-8UNC	3.94	2.56	1 1/2 X 1 X 7.87
6255Y	35.43	27.958 27.953	2.64	1.54	12	10.43	0.276	17.72	31.89	55.7	6.625	9.84	1-8UNC	3.94	2.56	1 3/4 X 1 1/4 X 9.06
6265Y	38.58	29.926 29.921	2.83	1.77	12	11.22	0.276	18.11	34.65	60.6	7.375	10.63	1 1/4-7UNC	4.92	3.15	1 3/4 X 1 1/4 X 9.06

Dimensions shown are for reference only and are subject to change without notice, unless certified.
Certified prints are available after receipt of an order; consult factory.

EXTENDED BASE DIMENSIONS

C14VM-609□Y~619□Y
C17VM-609□Y~619□Y

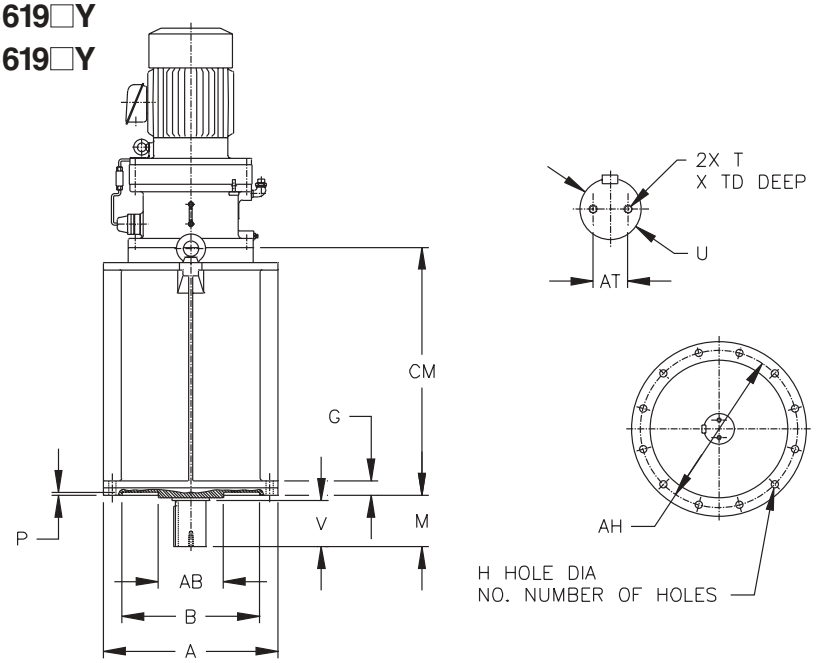

Metric (mm)

MODEL C14VM	A	B H8	G	H	No.	M	P	AB	AH	CM	U h6	V	T	AT	TD	KEY
609□	230	160	32	11	6	66	5	105	200	235	32	55	M6	16	16	10 X 8 X 40
610□	230	160	32	11	6	66	5	105	200	235	32	55	M6	16	16	10 X 8 X 40
612□	260	180	35	14	6	78	5	110	230	289	40	65	M6	25	16	12 X 8 X 50
613□	320	210	37	18	6	97	5	140	280	358	50	82	M8	31.5	20	14 X 9 X 70
614□	320	210	37	18	6	97	5	140	280	358	50	82	M8	31.5	20	14 X 9 X 70
616□	370	270	40	18	6	113	6	160	330	411	60	95	M10	40	25	18 X 11 X 80
617□	440	325	43	18	8	123	6	210	400	461	70	105	M10	40	25	20 X 12 X 80
618□	500	365	47	22	6	140	6	230	450	516	80	120	M12	50	30	22 X 14 X 100
619□	580	440	50	22	8	150	6	260	520	578	90	130	M12	50	30	25 X 14 X 130

MODEL C17VM	A	B H8	G	H	No.	M	P	AB	AH	CM	U h6	V	T	AT	TD	KEY
609□	260	180	35	14	8	78	5	110	230	316	40	65	M6	25	16	12 X 8 X 45
610□	260	180	35	14	8	78	5	110	230	316	40	65	M6	25	16	12 X 8 X 45
612□	340	240	37	14	8	97	5	140	300	403	50	82	M8	31.5	20	14 X 9 X 60
613□	410	300	40	18	8	113	6	180	370	500	60	95	M10	40	25	18 X 11 X 70
614□	410	300	40	18	8	113	6	180	370	500	60	95	M10	40	25	18 X 11 X 70
616□	500	360	43	22	8	123	6	210	440	565	70	105	M10	40	25	20 X 12 X 80
617□	500	380	47	22	8	140	6	220	440	650	80	120	M12	50	30	22 X 14 X 90
618□	600	440	50	26	8	150	6	250	520	724	90	130	M12	50	30	25 X 14 X 100
619□	600	440	52	26	8	170	6	280	520	798	100	150	M16	63	40	28 X 16 X 130
6205	650	450	58	26	12	171	6	320	580	910	110	150	M16	63	40	28 X 16 X 135
6215	700	520	60	26	12	195	7	350	630	1017	125	170	M20	80	50	32 X 18 X 150
6225	730	580	63	33	12	215	7	370	660	1075	130	190	M20	80	50	32 X 18 X170
6235	800	630	66	33	12	235	7	390	720	1135	140	210	M20	80	50	36 X 20 X 185
6245	850	660	63	39	12	245	7	400	760	1305	160	230	M24	100	65	40 X 22 X 200
6255	900	710	67	39	12	265	7	450	810	1415	170	250	M24	100	65	40 X 22 X 230
6265	980	760	72	45	12	285	7	460	880	1540	190	270	M30	125	80	45 X 25 X 240

Dimensions shown are for reference only and are subject to change without notice, unless certified.
Certified prints are available after receipt of an order; consult factory.

TECHNICAL INFORMATION

- REDUCER / GEARMOTOR
- MOTOR
- STANDARDS and SPECIFICATIONS
- GENERAL ENGINEERING INFORMATION

NOTES

Reducer/ Gearmotor

- Lubrication
- Allowable Radial Load
- Moment of Inertia
- Slide Rail Dimensions
- Operating Principles
- Construction
- Tolerances of Slow Speed & High Speed Shafts
- Paint Specifications
- Rust Proofing Standards

LUBRICATION

Standard Type Mounted Reducer (Slow Speed Shaft Horizontal)[1,2]

Table E-1. Horizontal Mounted Single Reduction Reducers

Frame Size \ Reduction Ratio	6	8	11	23	15	17	21	25	29	35	43	51	59	71	87	119
6060 6065	Maintenance-Free Grease Lubrication (MF)															
6070 6075													59			
6080 6085															87	
6090 6095																
6100 6105 610H																
6110 6115																
6120 6125 612H																
6130 6135	Oil Bath Lubrication (PB)															
6140 6145 614H																
6160 6165 616H																
6170 6175																
6180 6185																
6190 6195																
6205																
6215																
6225																
6235																
6245																
6255																
6265																
6275																

Table E-2. Horizontal Mounted, Double Reduction Reducers

Frame Size \ Reduction Ratio	104	121	143	165	195	231	273	319	377	473	559	649	731	841	1003	1015	1247	1479	1849	2065	2537	3045	3481	4437	5133	6177	7569
6060DA 6065DA	Maintenance-Free Grease Lubrication (MF)																										
6070DA 6075DA																					2537						
6090DA 6095DA																									5133		
6100DA 6105DA																											
6120DA 6120DB																											
6125DA 6125DB																											
6130DA 6135DA	Grease Lubrication (G)																										
6130DB 6135DB																											
6130DC 6135DC																											
6140DA 6140DB 6140DC																											
6145DA 6145DB 6145DC																											
6160DA 6165DA																											
6160DB 6165DB																											
6170DA 6175DA																											
6170DB 6175DB																											
6180DA 6185DA																											
6160DC 6165DC	Oil Bath Lubrication (PB)																										
6170DC 6175DC																											
6180DB 6185DB																											
6190DA 6195DA																											
6190DB 6195DB																											
6205DA 6205DB				165																							
6215DA 6215DB		121																									
6225DA 6225DB																											
6235DA 6235DB																											
6245DA 6245DB																											
6255DA 6255DB																											
6265DA																											
6275DA									377																		

Notes: [1] Tables E-1 and E-2 show the standard lubrication method when the Cyclo drive is driven at the standard input speed.
[2] Ratios shown in white in Tables E-1 and E-2 are unavailable for the given unit sizes.

Standard Vertical Mounted Reducer (Slow Speed Shaft Horizontal)[1,2,3]

Table E-3. Vertical Mounted Single Reduction Reducer

Frame Size \ Reduction Ratio	6	8	11	13	15	17	21	25	29	35	43	51	59	71	87	119
6060 6065	Maintenance-Free Grease Lubrication (MF)															
6070 6075													59			
6080 6085															87	
6090 6095																
6100 6105																
6110 6115																
6120 6125																
6130 6135	Oil Bath Lubrication (PB)															
6140 6145																
6160 6165	Forced Oil Lubrication (P)															
6170 6175																
6180 6185																
6190 6195																
6205																
6215																
6225																
6235																
6245																
6255																
6265																
6275									TP		TP		TP		TP	

TP: Positive Displacement Pump Lubrication (see Table E-5.)

Table E-4. Vertical Mounted Double Reduction Reducer

Frame Size \ Reduction Ratio	104	121	143	165	195	231	273	319	377	473	559	649	731	841	1003	1015	1247	1479	1849	2065	2537	3045	3481	4437	5133	6177	7569
6060DA 6065DA	Maintenance-Free Grease Lubrication (MF)																										
6070DA 6075DA																					2537						
6090DA 6095DA																									5133		
6100DA 6105DA																											
6120DA 6120DB 6125DA 6125DB																											
6130DA 6135DA	Grease Lubrication (MF)																										
6130DB 6135DB																											
6130DC 6135DC																											
6140DA 6140DB 6140DC																											
6145DA 6145DB 6145DC																											
6160DA 6165DA																											
6160DB 6165DB																											
6170DA 6175DA																											
6170DB 6175DB																											
6180DA 6185DA																											
6160DC 6165DC	Forced Oil Lubrication (P)									473																	
6170DC 6175DC														841													
6180DB 6185DB																1015											
6190DA 6195DA																				2065							
6190DB 6195DB																											
6205DA 6205DB				165															1849								
6215DA 6215DB		121																			2537						
6225DA 6225DB																											
6235DA 6235DB																											
6245DA 6245DB		(P)																									
6255DA 6255DB																											
6265DA																											
6275DA									TP : Positive Displacement Pump Lubrication (see Table E-5)																		

Notes: [1] Please consult the factory for applications where the slow speed shaft is up.
[2] Tables E-3 and E-4 show the standard lubrication method when the Cyclo drive is driven at the standard input speed.
[3] Ratios shown in white in Tables E-3 and E-4 are unavailable for the given unit sizes.

LUBRICATION

Trochoid Pump

Table E. Trochoid Pump Type

Cyclo Drive			Trochoid Pump[1,2]					
Type	Frame Size	Reduction Ratio	Pump Type	Pump Motor	50 Hz Zone		60 Hz Zone	
					Flow ℓ/min	Max. Pressure kg/cm²	Flow ℓ/min	Max. Pressure kg/cm²
Vertical Shaft	6275	29,43,59,87	TOP216HA-VB3	0.75 kW 4P	24.0	8	28.8	5.0
	6275DA	All reduction ratios	TOP204HA-VB3	0.4 kW 4P	6.0	16	7.2	11.5

LUBRICANTS

Grease Lubricated Models

Those units defined in Tables E-1 ~ E-4 as being grease lubricated are filled with grease prior to shipment to the customer and are ready for use.

Table E-6. Standard Greases[3]

Ambient Temperature[4]		Cyclo Drive	Sumitomo Manufactured Motor[5]		
°F	°C	Shell Oil	Sealed Bearings	Open Bearings	
				B Type Insulation	F Type Insulation
			Kyodo Yushi	Shell Oil	Shell Oil
14 to 122	-10 to 50	Shell Alvania® Grease 2 (NLGI Grade #2)	Multitemp SRL	Shell Alvania® Grease 2 (NLGI Grade #2)	Shell Darina® Grease 2 (NLGI Grade #2)

Oil Lubricated Models

Oil lubricated models are not filled with oil prior to shipping. Before operating, please be sure to fill the unit with oil up to the red line on the oil gauge.

Table E-7. Standard Oils

Ambient Temperature[6,7]		Gulf Oil	Exxon Oil	Mobil Oil	Shell Oil	BP Oil
°F	°C					
14 to 41	-10 to 5	EP Lubricant HD 68	Spartan® EP 68	Mobilgear® 626 (ISO VG 68)	Omala® Oil 68	Energol® GR-XP 68
32 to 95	0 to 35	EP Lubricant HD 100 HD 150	Spartan® EP 100 EP 150	Mobilgear® 627, 629 (ISO VG 100, 150)	Omala® Oil 100, 150	Energol® GR-XP 100 GR-XP 150
86 to 122	30 to 50	EP Lubricant HD 220 HD 320 HD 460	Spartan® EP 220 EP 320 EP 460	Mobilgear® 630, 632 633, 634 (ISO VG 220-460)	Omala® Oil 220, 320, 460	Energol® GR-XP 220 GR-XP 320 GR-XP 460

Notes: [1] Consult the factory when using an inverter.
[2] A relief valve (Pressure set at 3 kgf/cm2) is a standard attachment in the trochoid pump.
[3] Avoid the use of grease other than shown in Table E-6.
[4] Consult the factory in advance when the drives are to be used under widely fluctuating temperatures or ambient temperatures other than those listed in Table E-6, or any other special conditions.
[5] When using another manufacturer's motor, please follow the Instruction Manual or the nameplate attached to the motor by that manufacturer.
[6] For use in winter or relatively low ambient temperatures, use the lower viscosity oil specified for each ambient temperature range.
[7] For consistent use in ambient temperatures other than 32°F-104°F (0˚C-40˚C), please consult the factory.

Oil Quantities[1]

Table E-8. Oil Fill Quantities

Single Reduction					Double Reduction				
Frame Size	Mounting Configuration				Frame Size	Mounting Configuration			
	Horizontal		Vertical			Horizontal		Vertical	
	U.S. gal.	liter	U.S. gal.	liter		U.S. gal.	liter	U.S. gal.	liter
6130, 6135	0.18	0.7	0.29	1.1	6160DC, 6165DC	0.40	1.5	0.26	1.0
6140, 6145, 614H	0.18	0.7	0.29	1.1	6170DC, 6175DC	0.63	2.4	0.50	1.9
6160, 6165, 616H	0.37	1.4	0.26	1.0	6180DB, 6185DB	0.92	3.5	0.53	2.0
6170, 6175	0.50	1.9	0.50	1.9	6190DA, 6195DA	1.5	5.8	0.71	2.7
6180, 6185	0.66	2.5	0.53	2.0	6190DB, 6195DB	1.6	6.0	0.71	2.7
6190, 6195	1.1	4.0	0.71	2.7	6205DA, 6205DB	1.6	6.0	2.9	11
6205	1.5	5.5	1.5	5.7	6215DA, 6215DB	2.6	10	3.7	14
6215	2.2	8.5	2.0	7.5	6225DA, 6225DB	2.9	11	4.8	18
6225	2.6	10	2.6	10	6235DA, 6235DB	4.5	17	6.1	23
6235	4.0	15	3.2	12	6245DA, 6245DB	4.8	18	7.7	29
6245	4.2	16	4.0	15	6255DA, 6255DB	6.1	23	11.1	42
6255	5.5	21	11.1	42	6265DA	8.5	32	13.5	51
6265	7.7	29	13.5	51	6275DA	15.9	60	(15.9)	(60)
6275	14.8	56	(15.9)	(60)					

( ) with trochoid pump

Note: [1] Please consult the factory for oil quantities when the reducer/gearmotor is mounted in any other position or angle.

ALLOWABLE OVERHUNG AND AXIAL LOAD

Overhung Load Acting on the Slow Speed Shaft

The overhung load acting on the Slow Speed Shaft may be calculated by using the following formula:

English

$$\text{Overhung Load} = \frac{126{,}000 \times HP \times Cf \times Lf \times Sf}{D \times N}$$

where: HP = Power Transmitted by shaft (HP)
Cf = Load Connection Factor
Lf = Load Location Factor
Sf = Service Factor
D = Pitch Diameter of Sprocket, etc (in)
N = Shaft Speed (RPM)

Metric

$$\text{Overhung Load} = \frac{T \times Cf \times Lf \times Sf}{R}$$

where: T = Torque Transmitted by shaft (N•m)
Cf = Load Connection Factor
Lf = Load Location Factor
Sf = Service Factor
R = Pitch Circle Radius of Sprocket, etc (m)

Table E-9. Slow Speed Shaft Load Location Factor, Lf (English)[1]

Frame Size		X (inches)																			
Single Reduction	Double Reduction	1/4	1/2	3/4	1	1¼	1½	1¾	2	2½	3	3½	4	4½	5	6	7	8	9	10	11
6060 6065	6060DA, 6064DA	0.86	1.08	1.49	–	–	–	–	–	–	–	–	–	–	–						–
6070 6075	6070DA, 6075DA	0.85	0.96	1.23	1.61	–	–	–	–	–	–	–	–	–	–						–
6080 6085	–	0.83	0.91	1.01	1.30	1.63	–	–	–	–	–	–	–	–	–						–
6090 6095	6090DA, 6095DA	0.88	0.95	1.10	1.40	1.73	–	–	–	–	–	–	–	–	–						–
6100 6105 610H	6100DA, 6105DA	0.88	0.95	1.10	1.40	1.73	–	–	–	–	–	–	–	–	–						–
6110 6115	–	0.80	0.87	0.95	1.02	1.12	1.30	1.51	–	–	–	–	–	–	–						–
6120 6125 612H	6120DA, 6120DB, 6125DA, 6125DB	–	0.85	0.91	0.98	1.14	1.36	1.57	–	–	–	–	–	–	–						–
6130 6135	6130DA, 6130DB, 6130DC, 6135DA, 6135DB, 6135DC	–	–	0.86	0.92	0.97	1.08	1.24	1.40	1.72	–	–	–	–	–	–	–	–	–	–	–
6140 6145 614H	6140DA, 6140DB, 6140DC, 6145DA, 6145DB, 6145DC	–	–	–	0.74	0.82	0.91	0.99	1.12	1.37	1.62	1.88	–	–	–	–	–	–	–	–	–
6160 6265 616H	6160DA, 6160DB 6160DC, 6165DA 6165DB, 6165DC	–	–	–	0.87	0.91	0.95	1.00	1.13	1.39	1.67	1.94	–	–	–	–	–	–	–	–	–
6170 6175	6170DA, 6170DB 6170DC, 6175DA	–	–	–	0.89	0.93	0.96	1.00	1.13	1.39	1.67	1.94	–	–	–	–	–	–	–	–	–
6180 6185	6180DA, 6180DB 6185DA, 6185DB	–	–	–	0.85	0.88	0.92	0.95	0.99	1.15	1.37	1.58	–	–	–	–	–	–	–	–	–
6190 6195	6190DA, 6190DB 6195DA, 6195DB	–	–	–	–	0.86	0.88	0.91	0.93	0.99	1.13	1.30	1.48	1.67	–	–	–	–	–	–	–
6205	6205DA, 6205DB	–	–	–	–	–	–	0.74	0.78	0.86	0.95	1.04	1.13	1.22	1.31	1.49	–	–	–	–	–
6215	6215DA, 6215DB	–	–	–	–	–	–	0.73	0.78	0.86	0.95	1.04	1.14	1.23	1.32	1.50	–	–	–	–	–
6225	6225DA, 6225DB	–	–	–	–	–	–	0.88	0.90	0.94	0.98	1.02	1.06	1.10	1.14	1.23	–	–	–	–	–
6235	6235DA, 6235DB	–	–	–	–	–	–	0.84	0.85	0.89	0.93	0.97	1.00	1.04	1.08	1.16	1.23	–	–	–	–
6245	6245DA, 6245DB	–	–	–	–	–	–	0.84	0.86	0.90	0.93	0.97	1.00	1.04	1.08	1.15	1.22	–	–	–	–
6255	6255DA, 6255DB	–	–	–	–	–	–	–	0.83	0.86	0.89	0.93	0.95	0.99	1.02	1.08	1.21	1.38	1.54	–	–
6265	6265DA	–	–	–	–	–	–	–	–	–	0.84	0.88	0.90	0.93	0.95	1.02	1.16	1.31	1.47	1.64	1.80
6275	6275DA	–	–	–	–	–	–	–	–	–	–	0.71	0.76	0.80	0.85	0.95	1.08	1.23	1.37	1.52	1.67

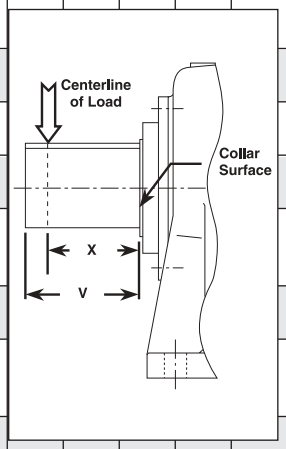

Note: [1] For load locations that are in between those detailed in Table E-9, the Load Location Factor may be calculated through interpolation.

Table E-10. Slow Speed Shaft Load Location Factor, Lf (Metric)[1]

Frame Size		X(mm)																							
Single Reduction	Double Reduction	5	10	15	20	25	30	35	40	45	50	60	70	80	90	100	120	140	160	180	200	225	250	275	300
6060 6065	6060DA 6065DA	0.83	0.94	1.19	1.56	–	–	–	–	–	–	–	–			–		–							–
6070 6075	6070DA 6075DA	0.82	0.91	1.00	1.29	1.59	1.88	–	–	–	–	–	–	–	–	–	–	–							
6080 6085	–	0.81	0.87	0.94	1.03	1.28	1.54	1.80	–	–	–	–	–	–	–	–	–	–							
6090 6095	6090DA 6095DA	0.86	0.92	0.97	1.13	1.38	1.64	1.90	–	–	–	–	–	–	–	–	–	–							
6100 6105 610H	6100DA 6105DA	0.86	0.92	0.97	1.13	1.38	1.64	1.90	–	–	–	–	–	–	–	–	–	–							
6110 6115	–	0.78	0.84	0.90	0.96	1.02	1.08	1.19	1.36	1.53	–	–	–	–	–	–	–	–							
6120 6125 612H	6120DA 6120DB 6125DA 6125DB	–	0.82	0.87	0.92	0.97	1.08	1.25	1.42	1.59	1.76	–	–	–	–	–	–	–							
6130 6135	6130DA 6130DB 6130DC 6135DA 6135DB 6135DC	–	–	0.83	0.87	0.92	0.96	1.00	1.13	1.25	1.38	1.63	1.88	–	–	–	–	–							
6140 6145 614H	6140DA 6140DB 6140DC 6145DA 6145DB 6145DC	–	–	–	0.66	0.73	0.80	0.87	0.93	1.00	1.10	1.30	1.50	1.70	1.90	–	–	–	–	–	–	–	–	–	–
6160 6165 616H	6160DA 6160DB 6160DC 6165DA 6165DB 6165DC	–	–	–	0.83	0.87	0.90	0.93	0.97	1.00	1.11	1.32	1.53	1.75	1.96	–	–	–	–	–	–	–	–	–	–
6170 6175	6170DA 6170DB 6170DC 6175DA	–	–	–	0.86	0.89	0.92	0.94	0.97	1.00	1.11	1.32	1.53	1.75	1.96	–	–	–	–	–	–	–	–	–	–
6180 6185	6180DA 6180DB 6185DA 6185DB	–	–	–	–	0.85	0.87	0.90	0.93	0.95	0.98	1.09	1.26	1.43	1.60	1.78	–	–	–	–	–	–	–	–	–
6190 6195	6190DA 6190DB 6195DA 6195DB	–	–	–	–	–	0.85	0.87	0.89	0.91	0.93	0.97	1.04	1.18	1.32	1.46	1.75	–	–	–	–	–	–	–	–
6205	6205DA 6205DB	–	–	–	–	–	–	–	0.70	0.74	0.77	0.84	0.91	0.98	1.05	1.12	1.26	1.40	1.54	–	–	–	–	–	–
6215	6215DA 6215DB	–	–	–	–	–	–	–	0.70	0.73	0.77	0.84	0.91	0.98	1.05	1.13	1.27	1.41	1.56	–	–	–	–	–	–
6225	6225DA 6225DB	–	–	–	–	–	–	–	0.86	0.88	0.90	0.93	0.96	0.99	1.02	1.06	1.12	1.19	1.25	–	–	–	–	–	–
6235	6235DA 6235DB	–	–	–	–	–	–	–	0.82	0.84	0.85	0.88	0.91	0.94	0.97	1.00	1.06	1.12	1.18	1.24	1.30	–	–	–	–
6245	6245DA 6245DB	–	–	–	–	–	–	–	0.83	0.84	0.86	0.89	0.92	0.94	0.97	1.00	1.06	1.11	1.17	1.23	1.29	–	–	–	–
6255	6255DA 6255DB	–	–	–	–	–	–	–	–	–	0.83	0.85	0.88	0.90	0.93	0.95	1.00	1.05	1.10	1.22	1.36	1.52	1.69	–	–
6265	6265DA	–	–	–	–	–	–	–	–	–	–	–	0.83	0.85	0.88	0.90	0.94	0.98	1.04	1.17	1.29	1.45	1.61	1.77	1.93
6275	6275DA	–	–	–	–	–	–	–	–	–	–	–	–	0.67	0.71	0.75	0.82	0.90	0.98	1.09	1.21	1.35	1.50	1.65	1.79

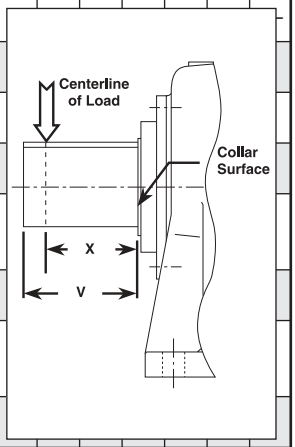

Table E-11. Load Connection Factor – Cf

Type of Connection	Factor
General Purpose Chain	1.0
Machined Gear, Pinion or Synchronous	1.25
V-Belt	1.5
Flat Belt	2.5

Table E-12. Service Factor – Cf

Degree of Shock	Sf
Steady Loads	1.0
Moderate Shock	1.3
Heavy Shock	1.6

CALCULATION EXAMPLE

A uniformly loaded belt conveyor requiring 5 HP is to be driven 8 hours/day by an SM-Cyclo® speed reducer, size 6135 ratio 29:1, 60 RPM output using a 9.84" pitch diameter sprocket on the slow speed shaft. Centerline of the load is 1.5" from the collar surface.

PROCEDURE

1) Calculate the overhung load with Cf = 1.0 (from Table E-11), Lf = 1.08 (from Table E-10) and Sf = 1.0 (from Table-12).

$$\text{Overhung Load} = \frac{126{,}000 \times 5 \times 1.0 \times 1.08 \times 1.0}{9.84 \times 60} = 1152 \text{ lbs.}$$

2) Check the overhung load capacity of the 6135, 29:1 with 1750 RPM input speed – Allowable Overhung Load = 2125 lbs

Since the allowable overhung load of the 6135 is larger than the calculated overhung load of 1152 lbs, the application is satisfactory.

Note: [1] For load locations that are in between those detailed in Table E-10, the Load Location Factor may be calculated through interpolation.

ALLOWABLE OVERHUNG AND AXIAL LOAD

Slow Speed Shaft Overhung Load Capacity for Modified Units

When the overhung load exceeds the allowable values, a larger unit frame size may be selected. In some cases, factory supplied options may be offered that provide enhanced slow speed shaft overhung load capacity. Please refer to Table E-13 and Table E-14 for the external load capacities of these special units.

Table E-13. Type "R1" - Unit with Cast Iron Housing and Spherical Roller Bearing (Lf, Cf, Sf = 1)

Frame Size		Output Shaft Speed (RPM)															
Single Reduction	Double Reduction	10 & Below		15		20		25		30		35		40		50	
		N	lbs	N	lbs	N	lbs	N	lbs	N	lbs	N	lbs	N	lbs	N	lbs
6130 6135	6130DA 6130DB 6130DC 6135DA 6135DB 6135DC	14700	3305	14700	3305	14700	3305	14700	3305	14700	3305	14700	3305	14700	3305	14700	3305
6160 6165 616H	6160DA 6160DB 6160DC 6165DA 6165DB 6165DC	22100	4969	22100	4969	22100	4969	22100	4969	22100	4969	22100	4969	22100	4969	22100	4969
6170 6175	6170DA 6170DB 6170DC 6175DA 6175DB 6175DC	29500	6632	29500	6632	29500	6632	29500	6632	29500	6632	29500	6632	29500	6632	29500	6632
6180 6185	6180DA 6180DB 6185DA 6185DB	41700	9375	41700	9375	41700	9375	41700	9375	41700	9375	41700	9375	41700	9375	41700	9375
6190 6195	6190DA 6190DB 6195DA 6195DB	59000	13264	59000	13264	59000	13264	59000	13264	59000	13264	59000	13264	59000	13264	55200	12410

Frame Size		Output Shaft Speed (RPM)															
Single Reduction	Double Reduction	60		80		100		125		150		200		250		300	
		N	lbs	N	lbs	N	lbs	N	lbs	N	lbs	N	lbs	N	lbs	N	lbs
6130 6135	6130DA 6130DB 6130DC 6135DA 6135DB 6135DC	14700	3305	14100	3170	13500	3035	12600	2833	11900	2675	10900	2451	10200	2293	9660	2172
6160 6165 616H	6160DA 6160DB 6160DC 6165DA 6165DB 6165DC	22100	4969	22100	4969	21600	4856	20100	4519	19000	4272	17500	3934	16300	3665	15400	3462
6170 6175	6170DA 6170DB 6170DC 6175DA 6175DB 6175DC	29500	6632	29500	6632	29300	6587	27400	6160	25900	5823	23800	5351	22200	4991	21100	4744
6180 6185	6180DA 6180DB 6185DA 6185DB	41700	9375	41300	9285	38600	8678	36200	8138	34200	7689	31400	7059	—	—	—	—
6190 6195	6190DA 6190DB 6195DA 6195DB	53000	11915	47200	10612	44000	9892	41000	9218	38300	8611	34700	7801	—	—	—	—

Table E-14. Type “R2” - Unit with Ductile Iron Housing and Spherical Roller Bearing

(Lf, Cf, Sf = 1)

Frame Size		Output Shaft Speed (RPM)																			
Single Reduction	Double Reduction	4 & Below		5		6		8		10		15		20		25		30		35	
		N	lbs	N	lbs	N	lbs	N	lbs	N	lbs	N	lbs	N	lbs	N	lbs	N	lbs	N	lbs
6130 6135	6130DA 6130DB 6130DC 6135DA 6135DB 6135DC	24000	5396	24000	5396	24000	5396	24000	5396	24000	5396	23800	5351	21800	4901	20400	4586	19300	4339	18400	4137
6160 6165 616H	6160DA 6160DB 6160DC 6165DA 6165DB 6165DC	33600	7554	33600	7554	33600	7554	33600	7554	33600	7554	33600	7554	33600	7554	33300	7487	31500	7082	30100	6767
6170 6175	6170DA 6170DB 6170DC 6175DA 6175DB 6175DC	45900	10319	45900	10319	45900	10319	45900	10319	45900	10319	45900	10319	45900	10319	45300	10184	42900	9645	40900	9195
6180 6185	6180DA 6180DB 6185DA 6185DB	55700	12522	55700	12522	55700	12522	55700	12522	55700	12522	55700	12522	55700	12522	55700	12522	55700	12522	54000	12140
6190 6195	6190DA 6190DB 6195DA 6195DB	71800	16142	71800	16142	71800	16142	71800	16142	71800	16142	71800	16142	71800	16142	71800	16142	69300	15580	66100	14861
6205	6205DA 6205DB	97800	21987	97800	21987	97800	21987	97800	21987	97800	21987	89100	20031	81800	18390	76500	17199	72400	16277	69100	15535
6215	6215DA 6215DB	132000	29860	126000	28327	119000	26754	109000	24505	102000	22932	90500	20346	83000	18660	77600	17446	73500	16524	70100	15760
6225	6225DA 6225DB	161000	36196	156000	35072	148000	33273	135000	30351	126000	28327	112000	25180	103000	23156	96300	21650	91100	20479	87000	19559
6235	6235DA 6235DB	183000	41142	183000	41142	183000	41142	170000	38219	159000	35746	141000	31700	129000	29002	121000	27203	114000	25629	109000	24505
6245	6245DA 6245DB	223000	50135	209000	46987	198000	44514	181000	40692	169000	37995	150000	33723	138000	31025	129000	29002	122000	27428	116000	26079
6255	6255DA 6255DB	274000	61601	258000	58004	244000	54856	224000	50360	210000	47212	185000	41592	170000	38219	159000	35746	151000	33948	144000	32374
6265	6265DA	283000	63624	283000	63624	283000	63624	270000	60701	253000	56879	224000	50360	205000	46088	191000	42941	181000	40692	174000	39119
6275	6275DA	272000	61151	272000	61151	272000	61151	272000	61151	272000	61151	272000	61151	272000	61151	272000	61151	272000	61151	—	—

Frame Size		Output Shaft Speed (RPM)																			
Single Reduction	Double Reduction	40		50		60		80		100		125		150		200		250		300	
		N	lbs	N	lbs	N	lbs	N	lbs	N	lbs	N	lbs	N	lbs	N	lbs	N	lbs	N	lbs
6130 6135	6130DA 6130DB 6130DC 6135DA 6135DB 6135DC	17800	4002	16500	3710	15600	3507	14400	3237	13500	3035	12600	2833	11900	2675	10900	2451	10200	2293	9660	2172
6160 6165 616H	6160DA 6160DB 6160DC 6165DA 6165DB 6165DC	28900	6497	27000	6070	25600	5755	23500	5283	22000	4946	20500	4609	19400	4362	17900	4024	16600	3732	15400	3462
6170 6175	6170DA 6170DB 6170DC 6175DA 6175DB 6175DC	39300	8835	36800	8273	34800	7824	31900	7172	29900	6722	27900	6272	26400	5935	24300	5463	22200	4991	21100	4744
6180 6185	6180DA 6180DB 6185DA 6185DB	51900	11668	48500	10904	45900	10319	42100	9465	39400	8858	36900	8296	34900	7846	32000	7194	—	—	—	—
6190 6195	6190DA 6190DB 6195DA 6195DB	63500	14276	59400	13354	56300	12657	51600	11601	48300	10859	45100	10139	42800	9622	39300	8835	—	—	—	—
6205	6205DA 6205DB	66400	14928	62100	13961	58800	13219	54000	12140	50500	11353	47100	10589	44600	10027	41000	9218	—	—	—	—
6215	6215DA 6215DB	67400	15153	63000	14164	59600	13399	54800	12320	51300	11533	47900	10769	45400	10207	41600	9353	—	—	—	—
6225	6225DA 6225DB	83500	18772	78100	17558	74000	16637	67900	15265	63500	14276	59400	13354	56300	12657	51500	11578	—	—	—	—
6235	6235DA 6235DB	105000	23606	98100	22055	92900	20886	85300	19177	79800	17941	74500	16749	—	—	—	—	—	—	—	—
6245	6245DA 6245DB	112000	25180	105000	23606	98900	22235	90800	20414	84900	19087	79400	17851	—	—	—	—	—	—	—	—
6255	6255DA 6255DB	139000	31250	129000	29002	123000	27653	112000	25180	105000	23606	98300	22100	—	—	—	—	—	—	—	—
6265	6265DA	166000	37320	156000	35072	148000	33273	135000	30351	126000	28327	118000	26529	—	—	—	—	—	—	—	—
6275	6275DA	—	—	—	—	—	—	—	—	—	—	—	—	—	—	—	—	—	—	—	—

ALLOWABLE OVERHUNG AND AXIAL LOAD

Overhung Load Acting on the High Speed Shaft

The overhung load acting on the High Speed Shaft may be calculated by using the following formula:

English

$$\text{Overhung Load} = \frac{126{,}000 \times HP \times Cf \times Lf \times Sf}{D \times N}$$

where: HP = Power Transmitted by shaft (HP)
Cf = Load Connection Factor
Lf = Load Location Factor
Sf = Service Factor
D = Pitch Diameter of Sprocket, etc (in)
N = Shaft Speed (RPM)

Metric

$$\text{Overhung Load} = \frac{T \times Cf \times Lf \times Sf}{R \times N}$$

where: T = Torque Transmitted by shaft (N•m)
Cf = Load Connection Factor
Lf = Load Location Factor
Sf = Service Factor
R = Pitch Circle Radius of Sprocket, etc (m)
N = Shaft Speed (RPM)

Table E-15. High Speed Shaft Load Location Factor, Lf (English)[1]

Frame Size		L (inch)																		
Single Reduction	Double Reduction	1/4	1/2	3/4	1	1¼	1½	1¾	2	2½	3	3½	4	4½	5	5½	6	6½	7	7½
6060 6065	6060DA 6065DA 6070DA 6075DA	0.78	1.07	1.52	—	—	—	—	—	—	—	—	—	—						—
6070 6075	6090DA 6095DA 6100DA 6105DA 6120DA 6125DA 6130DA 6135DA 6140DA 6145DA	0.78	1.07	1.52	—	—	—	—	—	—	—	—	—	—						—
6080 6085	—	0.78	1.07	1.52	—	—	—	—	—	—	—	—	—	—						—
6090 6095	6120DB 6125DB 6130DB 6135DB 6140DB 6145DB 6160DA 6165DA 6170DA 6175DA	0.90	1.09	1.52	2.03	—	—	—	—	—	—	—	—	—						—
6100 6105 610H	6130DC 6135DC 6140DC 6145DC 6160DB 6165DB 6170DB 6175DB 6180DA 6185DA	0.93	1.09	1.52	2.03	—	—	—	—	—	—	—	—	—						—
6110 6115	—	0.93	1.09	1.52	2.03	—	—	—	—	—	—	—	—	—						—
6120 6125 612H	6160DC 6165DC 6170DC 6175DC 6190DA 6195DA 6205DA	—	0.87	1.10	1.43	1.77	2.12	—	—	—	—	—	—	—	—	—	—	—	—	—
6130 6135	6180DB 6185DB 6190DB 6195DB 6205DB 6215DA 6225DA	—	0.84	0.98	1.25	1.53	1.83	2.11	—	—	—	—	—	—	—	—	—	—	—	—
6140 6145 614H	—	—	0.84	0.98	1.25	1.53	1.83	2.11	—	—	—	—	—	—	—	—	—	—	—	—
6160 6165 616H	6125DB 6235DA 6245DA	—	0.94	0.97	1.06	1.22	1.36	1.51	1.66	—	—	—	—	—	—	—	—	—	—	—
6170 6175	6255DA 6255DB	—	—	0.95	0.99	1.09	1.23	1.38	1.51	1.79	2.08	—	—	—	—	—	—	—	—	—
6180 6185	6235DB 6245DB	—	—	—	0.96	1.01	1.11	1.24	1.37	1.63	1.88	2.15	—	—	—	—	—	—	—	—
6190 6195	6255DB 6265DA 6275DA	—	—	—	0.95	0.99	1.06	1.15	1.26	1.47	1.69	1.90	—	—	—	—	—	—	—	—
6205	—	—	—	—	0.93	0.96	0.99	1.04	1.11	1.26	1.40	1.55	1.70	1.84	—	—	—	—	—	—
6215	—	—	—	—	0.93	0.96	0.99	1.03	1.09	1.23	1.36	1.50	1.63	1.76	—	—	—	—	—	—
6225	—	—	—	—	0.94	0.97	0.99	1.02	1.04	1.10	1.20	1.32	1.43	1.55	—	—	—	—	—	—
6235	—	—	—	—	0.84	0.86	0.88	0.93	0.99	1.10	1.22	1.33	1.45	1.57	—	—	—	—	—	—
6245	—	—	—	—	0.91	0.93	0.95	0.98	1.00	1.10	1.21	1.32	1.43	1.54	—	—	—	—	—	—
6255	—	—	—	—	—	—	0.93	0.94	0.96	1.00	1.07	1.15	1.23	1.31	1.39	1.47	1.55	1.63	1.71	—
6265	—	—	—	—	—	—	0.93	0.94	0.96	1.00	1.07	1.15	1.23	1.31	1.39	1.47	1.55	1.63	1.71	—
6275	—	—	—	—	—	—	—	—	0.94	0.98	1.02	1.13	1.23	1.34	1.45	1.56	1.66	1.77	1.90	2.00

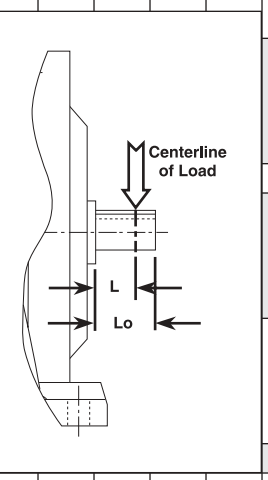

Note: [1] For load locations that are in between those detailed in Table E-15, the Load Location Factor may be calculated through interpolation.

Table E-16. High Speed Shaft Load Location Factor, Lf (Metric)[1]

Frame Size		L (mm)																			
Single Reduction	Double Reduction	5	10	15	20	25	30	35	40	45	50	60	70	80	90	100	120	140	160	180	200
6060 6065	6060DA 6065DA 6070DA 6075DA	0.73	0.91	1.20	1.60	2.00	—	—	—	—	—	—	—	—	—						—
6070 6075	6090DA 6095DA 6100DA 6105DA 6120DA 6125DA 6130DA 6135DA 6140DA 6145DA	0.73	0.91	1.20	1.60	2.00	—	—	—	—	—	—	—	—	—						—
6080 6085	—	0.73	0.91	1.20	1.60	2.00	—	—	—	—	—	—	—	—	—						—
6090 6095	6120DB 6125DB 6130DB 6135DB 6140DB 6145DB 6160DA 6165DA 6170DA 6175DA	0.88	0.96	1.20	1.59	2.00	2.38	—	—	—	—	—	—	—	—						—
6100 6105 610H	6130DC 6135DC 6140DC 6145DC 6160DB 6165DB 6170DB 6175DB 6180DA 6185DA	0.91	0.97	1.20	1.59	2.00	2.38	—	—	—	—	—	—	—	—						—
6110 6115	—	0.91	0.97	1.20	1.59	2.00	2.38	—	—	—	—	—	—	—	—	—	—	—	—	—	—
6120 6125 612H	6160DC 6165DC 6170DC 6175DC 6190DA 6195DA 6205DA	—	0.81	0.93	1.14	1.41	1.67	1.96	2.22	—	—	—	—	—	—	—	—	—	—	—	—
6130 6135	6180DB 6185DB 6190DB 6195DB 6205DB 6215DA 6225DA	—	0.78	0.89	1.00	1.23	1.45	1.69	1.92	2.13	—	—	—	—	—	—	—	—	—	—	—
6140 6145 614H	—	—	0.78	0.89	1.00	1.23	1.45	1.69	1.92	2.13	—	—	—	—	—	—	—	—	—	—	—
6160 6165 616H	6125DB 6235DA 6245DA	—	0.92	0.95	0.98	1.05	1.18	1.28	1.41	1.52	1.64	1.85	—	—	—	—	—	—	—	—	—
6170 6175	6255DA 6255DB	—	—	0.93	0.96	0.99	1.05	1.16	1.28	1.39	1.49	1.72	1.92	2.17	—	—	—	—	—	—	—
6180 6185	6235DB 6245DB	—	—	—	0.93	0.96	0.99	1.05	1.15	1.25	1.35	1.56	1.75	1.96	2.17	—	—	—	—	—	—
6190 6195	6255DB 6265DA 6275DA	—	—	—	0.93	0.95	0.98	1.00	1.09	1.16	1.25	1.41	1.59	1.75	1.92	2.08	—	—	—	—	—
6205	—	—	—	—	—	0.93	0.95	0.97	1.00	1.04	1.10	1.22	1.33	1.45	1.56	1.68	1.91	—	—	—	—
6215	—	—	—	—	—	0.93	0.95	0.98	1.00	1.03	1.08	1.19	1.29	1.40	1.51	1.61	1.82	—	—	—	—
6225	—	—	—	—	—	0.94	0.96	0.98	1.00	1.02	1.04	1.08	1.14	1.24	1.33	1.42	1.60	—	—	—	—
6235	—	—	—	—	—	0.84	0.86	0.87	0.89	0.93	0.98	1.07	1.16	1.25	1.34	1.44	1.62	—	—	—	—
6245	—	—	—	—	—	0.91	0.92	0.94	0.96	0.98	0.99	1.07	1.15	1.24	1.33	1.42	1.59	—	—	—	—
6255	—	—	—	—	—	—	—	0.92	0.93	0.94	0.96	0.99	1.03	1.09	1.16	1.22	1.34	1.47	1.60	1.72	—
6265	—	—	—	—	—	—	—	0.92	0.93	0.94	0.96	0.99	1.03	1.09	1.16	1.22	1.34	1.47	1.60	1.72	—
6275	—	—	—	—	—	—	—	—	—	0.93	0.94	0.97	0.99	1.04	1.14	1.22	1.39	1.56	1.72	1.92	2.08

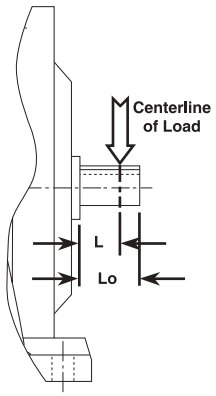

Note: [1] For load locations that are in between those listed in Table E-16, the Load Location Factor may be calculated through interpolation.

ALLOWABLE OVERHUNG AND AXIAL LOAD

Table E-17. High Speed Shaft Overhung Load Capacity

(Cf, Lf, Sf = 1)

Frame Size		Ratio	Input Speed (RPM)													
Single Reduction	Double Reduction		1750		1450		1165		980		870		720		580	
			lbs	N	lbs	N	lbs	N	lbs	N	lbs	N	lbs	N	lbs	N
6060 6065	6060DA 6065DA 6070DA 6075DA	6~17, 25~35	44	196	33	147	33	147	44	196	44	196	44	196	44	196
		21, 43	17.6	78.5	6.6	29.4	11.0	49.1	11.0	49.1	11.0	49.1	11.0	49.1	11.0	49.1
6070 6075	6090DA 6095DA 6100DA 6105DA 6120DA 6125DA 6130DA 6135DA 6140DA 6145DA	6~17, 25~35, 51, 59	44	196	33	147	33	147	44	196	44	196	44	196	44	196
		21, 43	11.0	49.1	11.0	49.1	11.0	49.1	11.0	49.1	11.0	49.1	33	147	44	196
6080 6085	—	6~15, 21~29 43~59, 87	44	196	33	147	33	147	44	196	44	196	44	196	44	196
		17, 35, 71	11.0	49.1	11.0	49.1	11.0	49.1	11.0	49.1	11.0	49.1	33	147	44	196
6090 6095	6120DB 6125DB 6130DB 6135DB 6140DB 6145DB 6160DA 6165DA 6170DA 6175DA	6~17, 25~71, 119	66	294	66	294	66	294	66	294	66	294	66	294	66	294
		21, 87	44	196	44	196	44	196	44	196	55	245	55	245	66	294
6100 6105 610H	6130DC 6135DC 6140DC 6145DC 6160DB 6165DB 6170DB 6175DB 6180DA 6185DA	6~11, 17~119	99	441	99	441	110	491	121	540	132	589	132	589	132	589
		13, 15	99	441	77	343	99	441	110	491	110	491	121	540	132	589
6110 6115	—	6, 8, 21~87	99	441	77	343	99	441	110	491	110	491	121	540	132	589
		11~17	44	196	44	196	44	196	44	196	55	245	55	245	66	294
6120 6125 612H	6160DC 6165DC 6170DC 6175DC 6190DA 6195DA 6205DA	6~17	133	590	155	690	166	740	175	780	198	880	198	880	198	880
		21~87	121	540	99	440	110	490	121	540	133	590	198	880	198	880
6130 6135	6180DB 6185DB 6190DB 6195DB 6205DB 6215DA 6225DA	6~17, 21	308	1370	308	1370	308	1370	342	1520	364	1620	387	1720	418	1860
		25~87	288	1280	288	1280	288	1280	308	1370	330	1470	353	1570	398	1770
6140 6145 614H	—	6, 8	308	1370	308	1370	308	1370	342	1520	364	1620	387	1720	418	1860
		11~21	277	1230	220	980	243	1080	265	1180	277	1230	297	1320	330	1470
		25	243	1080	254	1130	265	1180	288	1280	297	1320	308	1370	330	1470
		29~87	121	540	133	590	133	590	155	690	155	690	155	690	243	1080
6160 6165 616H	6125DB 6235DA 6245DA	8~25, 51, 59	398	1770	398	1770	441	1960	463	2060	486	2160	486	2160	486	2160
		29~43, 71, 87	243	1080	265	1180	288	1280	308	1370	308	1370	353	1570	398	1770
6170 6175	6255DA 6255DB	11~87	463	2060	463	2060	508	2260	508	2260	528	2350	551	2450	596	2650
6180 6185	6235DB 6245DB	11~87	618	2750	573	2550	618	2750	661	2940	683	3040	751	3340	771	3430
6190 6195	6255DB 6265DA 6275DA	11~25	683	3040	683	3040	728	3240	794	3530	816	3630	881	3920	881	3920
		29~87	596	2650	573	2550	638	2840	661	2940	706	3140	751	3340	816	3630
6205	—	11~87	1214	5400	1104	4910	1214	5400	1324	5890	1367	6080	1401	6230	1389	6180
6215	—	11~87	1290	5740	1147	5100	1223	5440	1378	6130	1423	6330	1533	6820	1632	7260
6225	—	11~87	1488	6620	1302	5790	1344	5980	1378	6130	1488	6620	1567	6970	1686	7500
6235	—	11~87	—	—	—	—	2248	10000	2140	9520	2062	9170	2019	8980	1963	8730
6245	—	11~87	—	—	—	—	2496	11100	2271	10100	2271	10100	2383	10600	2518	11200
6255	—	11~87	—	—	—	—	2653	11800	2428	10800	2540	11300	2765	12300	2945	13100
6265	—	11~87	—	—	—	—	2653	11800	2428	10800	2540	11300	2765	12300	2945	13100
6275	—	29~87	—	—	—	—	3305	14700	3305	14700	3305	14700	3305	14700	3305	14700

Axial Load Acting on Slow Speed Shaft

When the axial and overhung loads are combined to act on the Slow Speed Shaft, the following formula may be used to determine if the combined loading is acceptable for the selected Cyclo unit:

$$\left(\frac{Pr \bullet Lf}{Pro} + \frac{Pa}{Pao} \right) \bullet Cf \bullet Fs \leq 1$$

where:
- Pr = Actual Overhung Load (lbs, N)
- Lf = Load Location Factor
- Pro = Allowable Overhung Load (lbs, N)
- Pa = Actual Axial Load (lbs, N)
- Pao = Allowable Axial Load (lbs, N)
- Cf = Coupling Factor
- Sf = Shock factor

Table E-18. Slow Speed Shaft Axial Load Capacity (lbs)[1] (Cf, Lf, Sf = 1)

Frame Size		Output Speed (RPM)															
Single Reduction	Double Reduction	~10	15	20	25	30	35	40	50	60	80	100	125	150	200	250	300
6060 6065	6060DA 6065DA	66	66	66	66	66	66	66	66	66	66	66	66	66	66	66	66
6070 6075	6070DA 6075DA	176	176	176	176	176	176	176	176	176	176	176	176	176	176	176	176
6080 6085	—	221	221	221	221	221	221	221	221	221	221	221	221	221	221	221	221
6090 6095	6090DA 6095DA	221	221	221	221	221	221	221	221	221	221	221	221	221	221	221	221
6100 6105 610H	6100DA 6105DA	330	330	330	330	330	330	330	330	330	330	330	330	330	330	330	330
6110 6115	—	330	330	330	330	330	330	330	330	330	330	330	330	330	330	330	330
6120 6125 612H	6120DA 6120DB 6125DA 6125DB	661	661	661	661	661	661	661	661	661	661	661	661	661	623	562	537
6130 6135	6130DA 6130DB 6130DC 6135DA 6135DB 6135DC	881	881	881	881	881	881	881	881	881	881	881	881	881	881	881	881
6140 6145 614H	6140DA 6140DB 6140DC 6145DA 6145DB 6145DC	1214	1214	1214	1214	1214	1214	1214	1214	1214	1176	1093	1025	982	866	825	776
6160 6165 616H	6160DA 6160DB 6160DC 6165DA 6165DB 6165DC	1545	1545	1545	1545	1545	1545	1545	1545	1545	1545	1545	1545	1545	1416	1281	1146
6170 6175	6170DA 6170DB 6170DC 6175DA 6175DB 6175DC	2205	2205	2205	2205	2205	2205	2205	2205	2205	2205	2205	2176	2028	1819	1648	1547
6180 6185	6180DA 6180DB 6185DA 6185DB	3080	3080	3080	3080	3080	3080	3080	3080	3080	3080	3080	2945	2810	2473	—	—
6190 6195	6190DA 6190DB 6195DA 6195DB	4406	4406	4406	4406	4406	4406	4406	4406	4406	4406	4406	4159	3934	3462	—	—
6205	6205DA 6205DB	5958	5283	4744	4406	4182	4069	3979	3754	3530	3192	2968	2878	2765	2540	—	—
6215	6215DA 6215DB	6183	5508	4969	4631	4406	4182	4069	3867	3642	3305	3080	2968	2878	2653	—	—
6225	6225DA 6225DB	6610	5755	5216	4879	4631	4406	4204	3957	3754	3440	3237	3058	2945	2720	—	—
6235	6235DA 6235DB	7936	7059	6385	5958	5621	5283	5081	4744	4519	4182	3979	3754	—	—	—	—
6245	6245DA 6245DB	8386	7599	6947	6475	6138	5868	5643	5283	5013	4721	4474	4294	—	—	—	—
6255	6255DA 6255DB	10814	9690	8858	8296	7891	7554	7262	6835	6407	6025	5733	5441	—	—	—	—
6265	6265DA	11691	11691	11466	10679	10072	9622	9353	8746	8386	7824	7419	6992	—	—	—	—
6275	6275DA	13242	13242	13242	13242	13242	13242	13242	13242	—	—	—	—	—	—	—	—

Note: [1] The values in Table E-18 are the maximum Slow Speed Shaft axial load capacity when no overhung load is applied to the Slow Speed Shaft.

ALLOWABLE OVERHUNG AND AXIAL LOAD

Table E-19. Slow Speed Shaft Axial Load Capacity (N)[1] (Cf, Lf, Sf = 1)

Frame Size		Output Speed (RPM)															
Single Reduction	Double Reduction	~10	15	20	25	30	35	40	50	60	80	100	125	150	200	250	300
6060 6065	6060DA 6065DA	294	294	294	294	294	294	294	294	294	294	294	294	294	294	294	294
6070 6075	6070DA 6075DA	785	785	785	785	785	785	785	785	785	785	785	785	785	785	785	785
6080 6085	—	981	981	981	981	981	981	981	981	981	981	981	981	981	981	981	981
6090 6095	6090DA 6095DA	981	981	981	981	981	981	981	981	981	981	981	981	981	981	981	981
6100 6105 610H	6100DA 6105DA	1470	1470	1470	1470	1470	1470	1470	1470	1470	1470	1470	1470	1470	1470	1470	1470
6110 6115	—	1470	1470	1470	1470	1470	1470	1470	1470	1470	1470	1470	1470	1470	1470	1470	1470
6120 6125 612H	6120DA 6120DB 6125DA 6125DB	2940	2940	2940	2940	2940	2940	2940	2940	2940	2940	2940	2940	2940	2770	2500	2390
6130 6135	6130DA 6130DB 6130DC 6135DA 6135DB 6135DC	3920	3920	3920	3920	3920	3920	3920	3920	3920	3920	3920	3920	3920	3920	3920	3920
6140 6145 614H	6140DA 6140DB 6140DC 6145DA 6145DB 6145DC	5400	5400	5400	5400	5400	5400	5400	5400	5400	5230	4860	4560	4370	3850	3670	3450
6160 6165 616H	6160DA 6160DB 6160DC 6165DA 6165DB 6165DC	6870	6870	6870	6870	6870	6870	6870	6870	6870	6870	6870	6870	6870	6300	5700	5100
6170 6175	6170DA 6170DB 6170DC 6175DA 6175DB 6175DC	9810	9810	9810	9810	9810	9810	9810	9810	9810	9810	9810	9680	9020	8090	7330	6880
6180 6185	6180DA 6180DB 6185DA 6185DB	13700	13700	13700	13700	13700	13700	13700	13700	13700	13700	13700	13100	12500	11000	—	—
6190 6195	6190DA 6190DB 6195DA 6195DB	19600	19600	19600	19600	19600	19600	19600	19600	19600	19600	19600	18500	17500	15400	—	—
6205	6205DA 6205DB	26500	23500	21100	19600	18600	18100	17700	16700	15700	14200	13200	12800	12300	11300	—	—
6215	6215DA 6215DB	27500	24500	22100	20600	19600	18600	18100	17200	16200	14700	13700	13200	12800	11800	—	—
6225	6225DA 6225DB	29400	25600	23200	21700	20600	19600	18700	17600	16700	15300	14400	13600	13100	12100	—	—
6235	6235DA 6235DB	35300	31400	28400	26500	25000	23500	22600	21100	20100	18600	17700	16700	—	—	—	—
6245	6245DA 6245DB	37300	33800	30900	28800	27300	26100	25100	23500	22300	21000	19900	19100	—	—	—	—
6255	6255DA 6255DB	48100	43100	39400	36900	35100	33600	32300	30400	28500	26800	25500	24200	—	—	—	—
6265	6265DA	52000	52000	51000	47500	44800	42800	41600	38900	37300	34800	33000	31100	—	—	—	—
6275	6275DA	58900	58900	58900	58900	58900	58900	58900	58900	—	—	—	—	—	—	—	—

Note: [1] The values in Table E-19 are the maximum Slow Speed Shaft axial load capacity when no overhung load is applied to the Slow Speed Shaft.

SLIDE RAIL DIMENSIONS

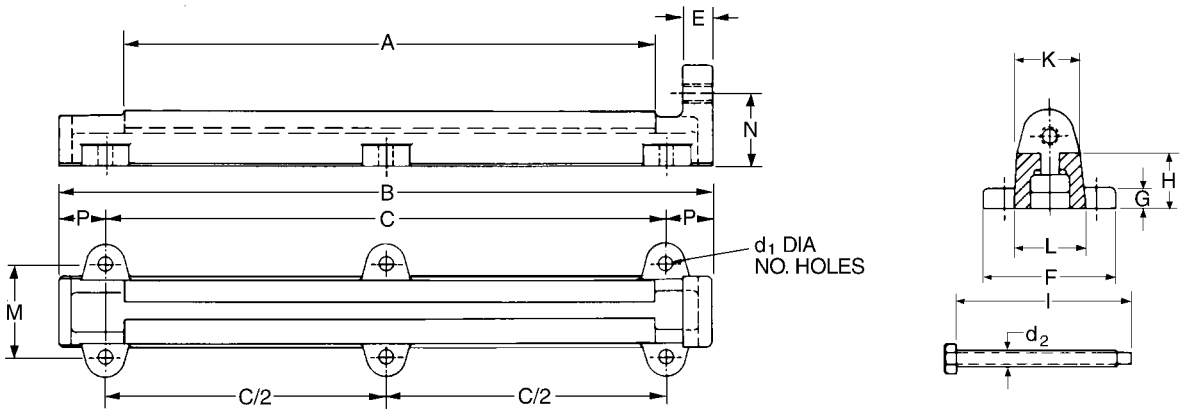

CYCLO MODEL[1]	A	B	C	E	F	G	H	K	L	M	N	P	d_1	NO. HOLES	C/2	WT. LBS. PC.	ADJUST[2] BOLT (d_2 x i)	CYCLO MOUNT[2] BOLT (SQ.HD.)
6090, 6095 6100, 6105 610H	10.62	17.31	16.16	.81	1.34	.719	1.97	1.19	.78	—	2.28	.59	.56	2	—	5	M12 x 4.75	M10 x 1.56
6120, 6125 612H	11.41	20.16	18.50	1.19	1.97	1.00	2.75	1.56	1.19	—	3.16	.78	.72	2	—	10	M16 x 5.12	M12 x 1.97
6130, 6135 6140, 6145 614H	15.75	20.50	16.94	1.19	4.75	.75	2.00	2.00	2.37	3.37	2.43	1.78	.56	4	—	18	M16 x 6.31	M16 x 2.37
6160, 6165 616H	20.50	25.19	21.69	1.19	5.12	1.00	2.16	2.19	2.75	3.75	2.75	1.75	.56	4	—	31	M16 x 7.87	M16 x 2.56
6170, 6175	21.69	29.50	23.62	1.75	7.12	1.19	2.56	3.12	3.75	5.12	3.37	2.94	.87	4	—	40	M24 x 9.43	M20 x 3.12
6180, 6185	25.62	33.50	27.56	1.75	7.12	1.19	3.12	3.12	3.75	5.12	3.94	2.94	.87	4	—	66	M24 x 11.81	M20 x 3.12
6190, 6195	25.62	33.50	27.56	1.75	9.01	1.56	3.56	3.94	5.12	6.69	4.34	2.94	1.03	4	—	83	M24 x 11.81	M24 x 3.94
6205, 6215	31.50	39.38	33.50	1.75	9.01	1.38	3.94	4.75	5.94	7.09	4.94	2.94	1.03	6	16.75	110	M24 x 13	M24 x 3.94
6225, 6235	32.28	48.82	37.00	2.17	10.04	1.61	5.51	6.69	10.04	6.89	6.49	5.91	1.54	6	18.50	132	M36 x 16.34	M36 x 4.34
6245, 6255	44.09	60.63	48.82	2.17	10.04	1.61	6.89	6.69	10.04	6.89	7.87	5.91	1.54	6	24.41	350	M36 x 25	M36 x 4.75

Notes: [1] Models 6090 thru 6255 require two rails.
[2] Metric bolts furnished by factory; lengths shown in inches.

Dimensions shown are for reference only and are subject to change without notice, unless certified.
Certified prints are available after receipt of an order; consult factory.

MOMENT OF INERTIA

The fan inertia has been added to the total inertia of frame sizes 6160-6275 in Table E-20.

The inertia of a double reduction model is calculated using the formula shown below.

Use the value in Table E-20 for the inertia of the first stage. For the inertia of the second stage, subtract the fan inertia from the value in Table E-20.

$$\text{Total Inertia of Double Reduction Cyclo} = \text{Inertia of First Reduction Stage} + \frac{\text{Inertia of Second Reduction Stage}}{(\text{Reduction Ratio of First Stage})^2}$$

Table E-20. Moment of Inertia on High Speed Shaft of Cyclo Reducer[1]

UNITS: Jc = x 10^{-4} kg•m^2
Ic = pound•inch^2

Frame Size	Reduction Ratio															
	6		8		11		13		15		17		21		25	
	Jc	Ic	Jc	Ic	Jc	Ic	Jc	Ic	Jc	Ic	Jc	Ic	Jc	Ic	Jc	Ic
6060, 6065	0.191	0.065	0.158	0.054	0.137	0.047	0.130	0.044	0.126	0.043	0.124	0.042	0.119	0.041	0.116	0.040
6070, 6075	0.195	0.067	0.160	0.055	0.138	0.047	0.131	0.045	0.127	0.043	0.124	0.042	0.119	0.041	0.116	0.040
6080, 6085	0.425	0.145	0.353	0.121	0.305	0.104	0.290	0.099	0.278	0.095	0.273	0.093	0.196	0.067	0.190	0.065
6090, 6095	1.02	0.347	0.683	0.233	0.650	0.222	0.563	0.192	0.545	0.186	0.590	0.202	0.345	0.118	0.333	0.114
6100, 6105	0.83	0.284	0.495	0.169	0.400	0.137	0.288	0.098	0.259	0.089	0.295	0.101	0.196	0.067	0.174	0.059
6110, 6115	1.56	0.533	1.17	0.400	0.905	0.309	0.828	0.283	0.780	0.267	0.748	0.256	0.670	0.229	0.655	0.224
6120, 6125	3.45	1.18	2.17	0.742	1.91	0.653	1.36	0.465	1.27	0.434	1.56	0.533	1.04	0.355	0.943	0.322
6130, 6135	9.20	3.14	6.50	2.22	4.95	1.69	4.30	1.47	3.95	1.35	3.65	1.25	3.15	1.08	4.73	1.62
6140, 6145	10.4	3.55	7.23	2.47	5.30	1.81	4.33	1.48	3.95	1.35	3.63	1.24	3.15	1.08	3.00	1.03
6160, 6165	36.5	12.5	29.0	9.91	23.2	7.93	22.2	7.59	21.2	7.24	19.9	6.80	19.3	6.60	18.9	6.49
6170, 6175	78.8	26.9	62.0	21.2	51.0	17.4	47.8	16.3	43.8	15.0	42.5	14.5	40.3	13.8	39.5	13.5
6180, 6185	-	-	-	-	73.0	24.9	67.8	23.2	61.8	21.1	59.8	20.4	57.0	19.5	54.3	18.6
6190, 6195	-	-	-	-	211	72.1	201	68.7	194	66.3	190	64.9	182	62.2	179	61.2
6205	-	-	-	-	237	81.0	-	-	216	73.8	-	-	204	69.7	-	-
6215	-	-	-	-	373	127	-	-	340	116.2	-	-	323	110.4	-	-
6225	-	-	-	-	483	165	-	-	438	149.7	-	-	410	140.1	-	-
6235	-	-	-	-	810	277	-	-	740	252.9	-	-	695	237.5	-	-
6245	-	-	-	-	1240	424	-	-	1130	386.1	-	-	1060	362.2	-	-
6255	-	-	-	-	2230	762	-	-	2040	697.1	-	-	1920	656.1	-	-
6265	-	-	-	-	2930	1001	-	-	2650	905.5	-	-	2490	850.9	-	-
6275	-	-	-	-	-	-	-	-	-	-	-	-	-	-	-	-

Frame Size	Reduction Ratio																Fan Moment of Inertia	
	29		35		43		51		59		71		87		119			
	Jc	Ic	Jc	Ic	Jc	Ic	Jc	Ic	Jc	Ic	Jc	Ic	Jc	Ic	Jc	Ic	Jc	Ic
6060, 6065	0.115	0.039	0.114	0.039	0.112	0.038	-	-	-	-	-	-	-	-	-	-	-	-
6070, 6075	0.115	0.039	0.114	0.039	0.113	0.039	0.112	0.038	0.111	0.038	-	-	-	-	-	-	-	-
6080, 6085	0.186	0.064	0.182	0.062	0.119	0.041	0.117	0.040	0.116	0.040	0.155	0.039	0.114	0.039	-	-	-	-
6090, 6095	0.385	0.132	0.313	0.107	0.308	0.105	0.183	0.063	0.240	0.082	0.179	0.061	0.237	0.081	0.177	0.060	-	-
6100, 6105	0.225	0.077	0.214	0.073	0.205	0.070	0.136	0.046	0.194	0.066	0.130	0.044	0.190	0.065	0.126	0.043	-	-
6110, 6115	0.640	0.219	0.618	0.211	0.608	0.208	0.593	0.203	0.590	0.202	0.585	0.200	0.583	0.199	-	-	-	-
6120, 6125	1.26	0.431	1.22	0.417	1.18	0.403	0.798	0.273	1.14	0.390	0.770	0.263	1.11	0.379	-	-	-	-
6130, 6135	2.80	0.957	2.73	0.933	2.58	0.882	2.55	0.871	2.55	0.871	2.49	0.851	2.48	0.847	-	-	-	-
6140, 6145	2.80	0.957	2.73	0.933	2.58	0.882	2.55	0.871	2.55	0.871	2.50	0.854	2.48	0.847	-	-	-	-
6160, 6165	18.1	6.18	17.9	6.12	17.6	6.01	17.6	6.01	17.6	6.01	17.3	5.91	17.3	5.91	-	-	8.85	30.2
6170, 6175	38.3	13.1	37.8	12.9	37.0	12.6	36.8	12.6	36.5	12.5	36.5	12.5	36.3	12.4	-	-	8.33	2.85
6180, 6185	52.8	18.0	52.3	17.9	51.5	17.6	50.5	17.3	50.0	17.1	49.8	17.0	49.5	16.9	-	-	8.18	2.80
6190, 6195	175	59.8	173	59.1	172	58.8	171	58.4	170	58.1	169	57.7	169	57.7	-	-	62.5	21.4
6205	196	67.0	-	-	190	64.9	-	-	188	64.2	-	-	186	63.6	-	-	62.0	21.2
6215	310	106	-	-	300	103	-	-	298	102	-	-	295	101	-	-	105	35.9
6225	388	133	-	-	375	128	-	-	370	126	-	-	368	126	-	-	150	51.3
6235	665	227	-	-	645	220	-	-	638	218	-	-	633	216	-	-	260	88.8
6245	1010	345	-	-	983	336	-	-	970	331	-	-	963	329	-	-	260	88.8
6255	1840	629	-	-	1800	615	-	-	1780	608	-	-	1770	605	-	-	593	203
6265	2370	810	-	-	2300	786	-	-	2260	772	-	-	2250	769	-	-	593	203
6275	-	-	-	-	7480	2556	-	-	7400	2529	-	-	7350	2512	-	-	2390	817

Note: [1] The values in Table E-20 are subject to change without notice.

Table E-21 does not include the inertia of the integral motors. The inertia of a single stage reduction gearmotor may be obtained by adding the inertia value obtained from Table E-21 to the motor inertia value.

The inertia of a double reduction model is calculated using the formula shown below.

Calculate the interia of the first stage (input side) in the same manner as calculating the inertia of a single stage reduction model. For the inertia of a second (output stage), the inertia in Table E-21 may be used.

$$\text{Inertia of Double Reduction Cyclo} = \text{Inertia of First Reduction Stage} + \frac{\text{Inertia of Second Reduction Stage}}{(\text{Reduction Ratio of First Stage})^2}$$

UNITS: Jc = x 10^{-4} kg•m^2
Ic = pound•inch^2

Table E-21. Moment of Inertia on Motor Shaft of Cyclo Gearmotor[1]

Frame Size	Reduction Ratio															
	6		8		11		13		15		17		21		25	
	Jc	Ic	Jc	Ic	Jc	Ic	Jc	Ic	Jc	Ic	Jc	Ic	Jc	Ic	Jc	Ic
6060, 6065	0.167	0.057	0.133	0.045	0.112	0.038	0.106	0.036	0.102	0.035	0.099	0.034	0.095	0.032	0.092	0.031
6070, 6075	0.171	0.058	0.135	0.046	0.114	0.039	0.107	0.037	0.102	0.035	0.100	0.034	0.095	0.032	0.092	0.031
6080, 6085	0.403	0.138	0.330	0.113	0.280	0.096	0.268	0.092	0.255	0.087	0.249	0.085	0.172	0.059	0.166	0.057
6090, 6095	0.955	0.326	0.740	0.253	0.593	0.203	0.623	0.213	0.605	0.207	0.530	0.181	0.403	0.138	0.390	0.133
6100, 6105	0.768	0.262	0.555	0.190	0.340	0.116	0.350	0.120	0.320	0.109	0.224	0.077	0.258	0.088	0.236	0.081
6110, 6115	1.50	0.513	1.11	0.379	0.845	0.289	0.768	0.262	0.720	0.246	0.688	0.235	0.610	0.208	0.595	0.203
6120, 6125	3.10	1.06	2.53	0.865	1.56	0.533	1.71	0.584	1.62	0.554	1.21	0.413	1.39	0.475	1.29	0.441
6130, 6135	8.58	2.93	5.88	2.01	4.33	1.48	3.68	1.26	3.30	1.13	3.03	1.04	2.51	0.858	2.35	0.803
6140, 6145	9.43	3.22	6.40	2.19	4.55	1.55	3.68	1.26	3.33	1.14	2.95	1.01	2.52	0.861	2.35	0.803
6160, 6165	24.7	8.44	17.2	5.88	12.4	4.24	11.0	3.76	9.90	3.38	8.35	2.85	7.65	2.61	71.5	24.4
6170, 6175	66.0	22.6	49.3	16.8	37.5	12.8	35.3	12.1	31.3	10.7	30.0	10.3	28.0	9.57	27.0	9.23
6180, 6185	-	-	-	-	58.5	20.0	52.8	18.0	46.8	16.0	44.5	15.2	42.3	14.5	39.3	13.4
6190, 6195	-	-	-	-	136	46.5	126	43.1	120	41.0	115	39.3	107	36.6	104	35.5
6205	-	-	-	-	162	55.4	-	-	141	48.2	-	-	129	44.1	-	-
6215	-	-	-	-	248	84.7	-	-	216	73.8	-	-	197	67.3	-	-
6225	-	-	-	-	305	104	-	-	258	88.2	-	-	232	79.3	-	-
6235	-	-	-	-	498	170	-	-	428	146	-	-	383	131	-	-
6245	-	-	-	-	903	309	-	-	793	271	-	-	723	247	-	-
6255	-	-	-	-	1470	502	-	-	1280	437	-	-	1160	396	-	-
6265	-	-	-	-	2150	735	-	-	1870	639	-	-	1700	581	-	-
6275	-	-	-	-	-	-	-	-	-	-	-	-	-	-	-	-

Frame Size	Reduction Ratio															
	29		35		43		51		59		71		87		119	
	Jc	Ic	Jc	Ic	Jc	Ic	Jc	Ic	Jc	Ic	Jc	Ic	Jc	Ic	Jc	Ic
6060, 6065	0.090	0.031	0.089	0.030	0.088	0.030	-	-	-	-	-	-	-	-	-	-
6070, 6075	0.091	0.031	0.089	0.030	0.088	0.030	0.087	0.357	0.087	0.030	-	-	-	-	-	-
6080, 6085	0.163	0.056	0.158	0.054	0.095	0.032	0.093	0.381	0.093	0.032	0.091	0.031	0.091	0.031	-	-
6090, 6095	0.325	0.111	0.253	0.086	0.248	0.085	0.242	0.992	0.181	0.062	0.239	0.082	0.178	0.061	0.236	0.081
6100, 6105	0.163	0.056	0.152	0.052	0.143	0.049	0.198	0.812	0.132	0.045	0.192	0.066	0.128	0.044	0.188	0.064
6110, 6115	0.580	0.198	0.558	0.191	0.548	0.187	0.533	2.19	0.530	0.181	0.525	0.179	0.523	0.179	-	-
6120, 6125	0.908	0.310	0.865	0.296	0.825	0.282	1.15	4.72	0.788	0.269	1.12	0.383	0.760	0.26	-	-
6130, 6135	2.16	0.738	2.08	0.711	1.96	0.670	1.93	7.91	1.91	0.653	1.86	0.636	1.85	0.632	-	-
6140, 6145	2.16	0.738	2.09	0.714	1.96	0.670	1.91	7.83	1.91	0.653	1.86	0.636	1.85	0.632	-	-
6160, 6165	6.35	2.17	6.10	2.08	5.85	2.00	5.75	23.6	5.78	1.98	5.53	1.89	5.45	1.86	-	-
6170, 6175	25.5	8.71	25.3	8.65	24.5	8.37	24.2	99.2	23.9	8.17	23.8	8.13	23.7	8.10	-	-
6180, 6185	37.5	12.8	37.0	12.6	36.0	12.3	35.0	144	34.8	11.9	34.5	11.8	34.3	11.7	-	-
6190, 6195	101	34.5	98.3	33.6	96.8	33.1	95.8	393	95.0	32.5	94.5	32.3	94.0	32.1	-	-
6205	121	41.3	-	-	115	39.3	-	-	113	38.61	-	-	117	40.0	-	-
6215	184	62.9	-	-	175	59.8	-	-	172	58.77	-	-	170	58.1	-	-
6225	210	71.8	-	-	197	67.3	-	-	192	66.61	-	-	188	64.2	-	-
6235	353	121	-	-	335	114	-	-	325	111	-	-	323	110	-	-
6245	680	232	-	-	650	222	-	-	638	218	-	-	633	216	-	-
6255	1080	369	-	-	1040	355	-	-	1020	349	-	-	1000	342	-	-
6265	1580	539.9	-	-	1510	516	-	-	1480	506	-	-	1460	499	-	-
6275	4900	1674	-	-	4730	1616	-	-	4650	1589	-	-	4600	1572	-	-

Note: [1] The values in Table E-21 are subject to change without notice.

MOMENT OF INERTIA

Table E-22. Moment of Inertia of Three Phase Integral Motor[1]

UNITS: J_M = x 10^{-4} kg•m²
I_M = pound•inch²

HP x Pole	1/8 x 4		1/4 x 4		1/3 x 4		1/2 x 4		3/4 x 4		1 x 4	
	J_M	I_M	J_M	I_M	J_M	I_M	J_M	I_M	J_M	I_M	J_M	I_M
Standard	3.25	1.11	5.00	1.71	5.00	1.71	6.50	2.22	10.1	3.45	12.0	4.10
With Brake	3.50	1.20	5.50	1.88	5.50	1.88	6.75	2.31	11.1	3.79	13.0	4.44

HP x Pole	1.5 x 4		2 x 4		3 x 4		5 x 4		7.5 x 4		10 x 4	
	J_M	I_M	J_M	I_M	J_M	I_M	J_M	I_M	J_M	I_M	J_M	I_M
Standard	18.5	6.32	21.3	7.28	33.3	11.38	84.8	29.0	114	39.0	268	91.6
With Brake	20.8	7.11	23.5	8.03	37.3	12.75	95.8	32.7	125	42.7	303	104

HP x Pole	15 x 4		20 x 4		25 x 4		30 x 4		40 x 4		50 x 4	
	J_M	I_M	J_M	I_M	J_M	I_M	J_M	I_M	J_M	I_M	J_M	I_M
Standard	375	128	898	307	2250	769	2250	769	2500	854	3080	1052
With Brake	410	140	1330	454	2320	793	2320	793	2570	878	3210	1097

HP x Pole	60 x 4		75 x 4	
	J_M	I_M	J_M	I_M
Standard	3430	1172	6750	2307

HP x Pole	20 x 6		25 x 6		40 x 6		50 x 6		60 x 6		75 x 6	
	J_M	I_M	J_M	I_M	J_M	I_M	J_M	I_M	J_M	I_M	J_M	I_M
Standard	3180	1087	3630	1240	4750	1623	6000	2050	10000	3417	11800	4032

Table E-23. Moment of Inertia of Three Phase, Inverter Duty, Integral Motor[1]

HP x Pole	1/8 x 4		1/4 x 4		1/2 x 4		1 x 4		2 x 4		3 x 4	
	J_M	I_M	J_M	I_M	J_M	I_M	J_M	I_M	J_M	I_M	J_M	I_M
Standard	5.00	1.71	6.50	2.22	12.0	4.10	21.3	7.28	33.3	11.4	84.8	29.0
With Brake	5.50	1.88	6.75	2.31	13.0	4.44	23.5	8.03	37.3	12.7	95.8	32.7

HP x Pole	5 x 4		7.5 x 4		10 x 4		15 x 4		20 x 4		25 x 4	
	J_M	I_M	J_M	I_M	J_M	I_M	J_M	I_M	J_M	I_M	J_M	I_M
Standard	114	39.0	268	91.6	375	128	898	307	2250	769	2250	769
With Brake	125	42.7	303	104	410	140	1330	454	-	-	2320	793

UNITS: J_M = x 10^{-4} kg•m²
I_M = pound•inch²

HP x Pole	30 x 4		40x 4		50 x 4	
	J_M	I_M	J_M	I_M	J_M	I_M
Standard	2500	854	3080	1052	3430	1172
With Brake	2570	878	3210	1097	-	-

Example 1: CNHM2-6115-29

(1) I_M = 7.28lb•in²
(standard 2 HP, 4 pole motor)

(2) Frame size 6115 of Cyclo Gearmotor
I_C at 29:1= 0.198 lb•in²

(3) ∑I of CNHM2-6115-29
$\sum I = I_M + I_C$
= (7.28 + 0.198)lb•in²
= 7.478 lb•in²

Example 2: CVVM20-6215DA-165 (15x11)

(1) J_M = 0.0898 kgf•m² (standard 20 HP, 4 pole motor)

(2) 6215DA = Cyclo frame size 6215 with ratio 15:1 combined to Cyclo frame size 6135 with ratio 11:1

(3) First stage of 6135 with ratio of 11:1 J_C = 4.33 x 10^{-4} kg•m²

(4) Second stage of 6215 with ratio of 15:1 J_C = 216x10^{-4} kg•m²

(5) Cyclo reducer $J_C = 4.33 \times 10^{-4} + \frac{216 \times 10^{-4}}{(11)^2} = 0.0006$ kg•m²

(6) ∑J of CVVM20-6215DA-165
$\sum J = J_M + J_C$
= (0.0898+0.0006) kg•m²
= 0.0904 kg•m²

Note: [1] The values in Table E-22 and Table E-23 are subject to change without notice.

OPERATING PRINCIPLES

The SM-Cyclo® speed reducer is fundamentaly different in principle and mechanism from the conventional helical or worm gear speed reducers. The unique speed reducer portion is an ingenious combination of the following two mechanisms:

- A combination of a planet gear and a fixed internal sun gear. In the SM-Cyclo® speed reducer, the planet gear has cycloidal-shaped teeth and the sun gear has circular pin teeth.

  The number of teeth in the planet gear is one or two less than that of the sun gear.
- A constant speed internal gearing mechanism.

See Fig. E-1

In equation 1, below, P identifies the number of the planet gear teeth, S that of the sun gear, $\omega 2$ the angular velocity of the planet gear around its own axis. The velocity ratio of $\omega 2$ to $\omega 1$ is shown as follows:

$$\frac{\omega 2}{\omega 1} = 1 - \frac{S}{P} = -\frac{S-P}{P} \quad \text{…Equation 1}$$

With S greater by one or two than P in this equation, the highest velocity ratio is obtainable.

That is, if S-P=1 is applied to Equation 1, the velocity ratio may be calculated from the following equation:

$$\frac{\omega 2}{\omega 1} = \frac{1}{P} \quad \text{…Equation 2}$$

Or if S-P=2 is applied to Equation 1, the velocity ratio may be calculated from the following equation:

$$\frac{\omega 2}{\omega 1} = \frac{2}{P} \quad \text{…Equation 3}$$

As the crankshaft rotates at the angular velocity $\omega 1$ around the axis of the sun gear, the planet gear rotates at the angular velocity

$$-\frac{1\omega 1}{P} \text{ or } -\frac{2\omega 1}{P}$$

when P indicates the number of the teeth of the planet gear and the symbol "-" indicates that the rotation of the planet gear is in a reverse direction to that of the crankshaft.

In the SM-Cyclo® speed reducer, illustrated in Fig. E-2, circular teeth (pins) are adapted for the sun gear and epitrochoid curved teeth for the planet gear, thereby avoiding tooth top interference. The rotation of the planet gear around its own axis is taken out through a constant speed internal gearing mechanism as shown in Fig. E-3.

In this mechanism shown in Fig. E-4, the pins of the slow speed shaft are evenly spaced on a circle that is concentric to the axis of the sun gear. The pins transmit the rotation of the planet gear by rolling internally on the circumference of the bores of each planet gear or cycloid disc. The diameter of the bores minus the diameter of the slow speed shaft pins is equal to twice the eccentricity value of the crank shaft (eccentric). This mechanism smoothly transmits only the rotation of the planet gear around its own axis to the slow speed shaft.

Fig. E-1 Principle of internal Planetary Gearing

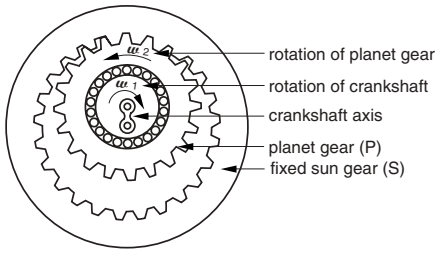

Fig. E-2 Epitrochoid Planet Gear-Circular(PIN) Tooth Sun Gear Combination

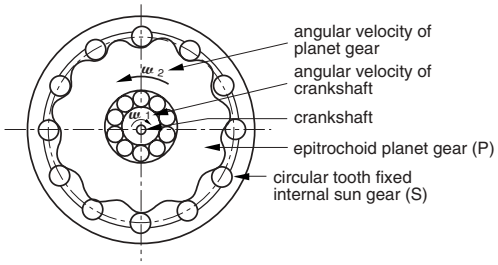

Fig. E-3 Constant Speed Internal Gearing

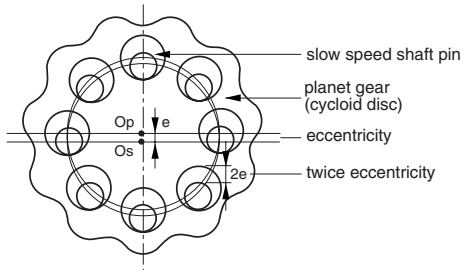

Fig. E-4 Combination of Planet-Sun Gears and Constant Speed Internal Gear

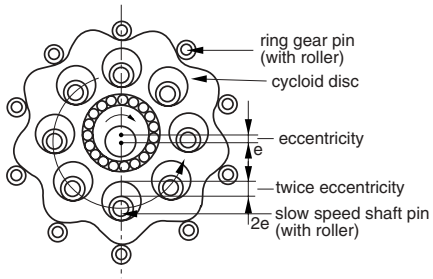

CONSTRUCTION DRAWINGS

Construction of Reducer and Gearmotor[1]

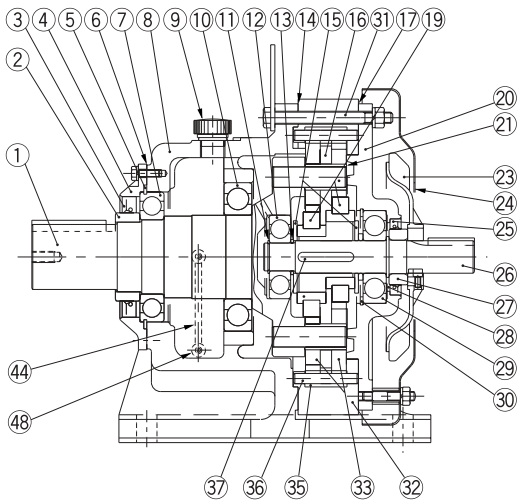

Fig. E-5 Type CHH (Horizontal Reducer)
Single reduction (Example: Frame size 6175)

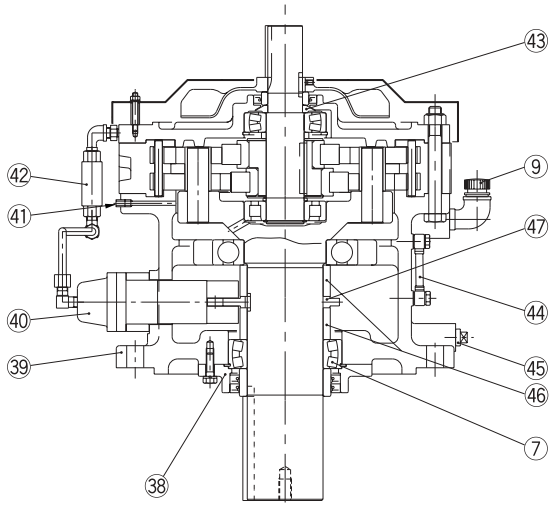

Fig. E-6 Type CVV (Vertical Reducer)
Single reduction (Example: Frame size 6225)

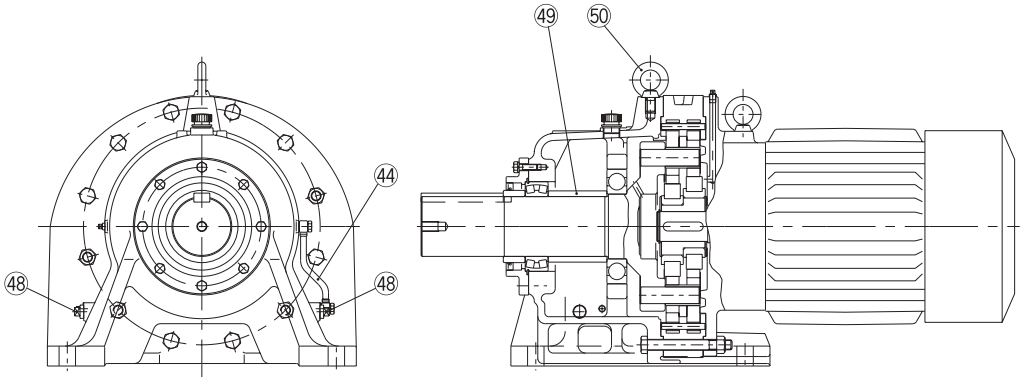

Fig. E-7 Type CHHM (Horizontal Gearmotor)
Single reduction (Example: Frame size 6225)

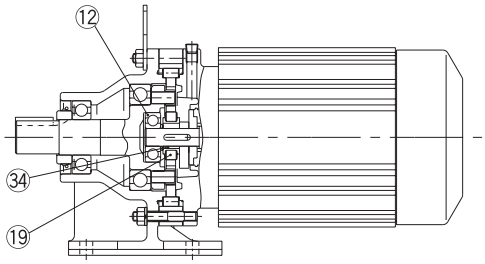

Fig. E-8 Type CNHM (Horizontal Gearmotor)
Single reduction (Example: Frame size 6085)

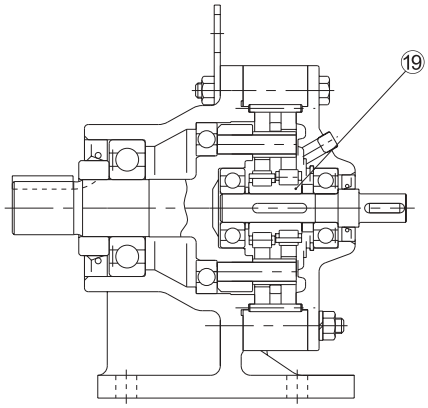

Fig. E-9 Type CNH (Horizontal Reducer)
Single reduction (Example: Frame size 6105)

Note: [1] Refer to Table E-24 for the list of principal parts.

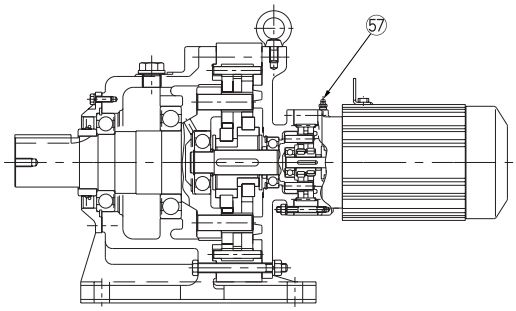

Fig. E-10 Type CHHM (Horizontal Gearmotor)
Double reduction (Example:
Frame size grease lubricated 6185DB)

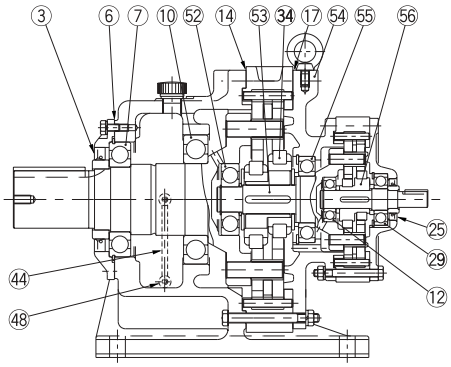

Fig. E-11 Type CHH (Horizontal Reducer)
Double reduction (Example: Frame size 6185DB)

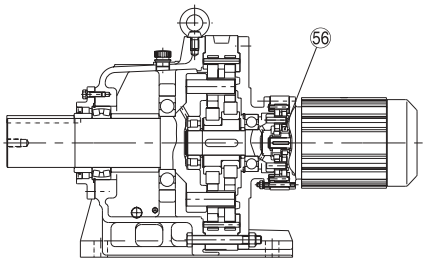

Fig. E-12 Type CHHM (Horizontal•Gearmotor)
Double reduction (Example: Frame size 6225DB)

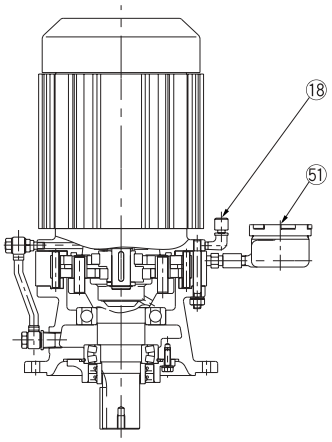

Fig. E-13 Type CVVM (Vertical Gearmotor)
Single reduction (Example:
Frame size 6145)

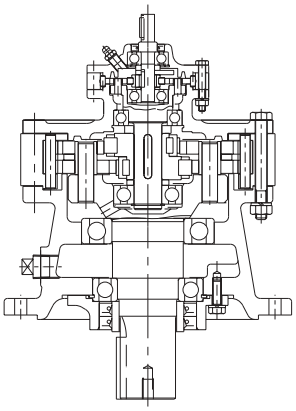

Fig. E-14 Type CVV (Vertical Reducer)
Double reduction (Example:
Frame size 6135DA)

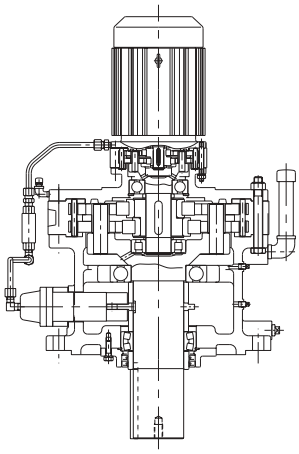

Fig. E-15 Type CVVM (Vertical Gearmotor)
Double reduction (Example:
Frame size 6225DA)

Table E-24. Principal Parts

No.	Part Name	No.	Part Name	No.	Part Name	No.	Part Name	No.	Part Name
1	Slow speed shaft	13	Spacer	26	High speed shaft	38	Gland	50	Eye bolt
2	Collar(Slow speed shaft)	14	Gasket B[1]	27	Collar (High Speed Shaft)	39	Flanged casing	51	Oil filler
3	Oil seal	15	End plate	28	Spacer	40	Plunger pump	52	Intermediate shaft, bearing A
4	Slow speed end cap	16	Spacer ring	29	High speed shaft, bearing B	41	Air vent plug	53	Intermediate shaft
5	Retaining ring	17	Gasket C[1]	30	Retaining ring	42	Oil signal	54	Intermediate cover
6	Gasket A[1]	18	Air vent plug	31	Bolt for ring gear housing	43	Oil slinger	55	Intermediate shaft, bearing B
7	Slow speed shaft, bearing A	19	Eccentric assembly	32	Ring gear housing	44	Oil level gauge	56	Eccentric assembly
8	Horizontal casing	20	High speed end shield	33	Cycloid disc	45	Plug (Oil drain)	57	Grease nipple
9	Oil filler plug	21	Slow speed shaft roller	34	Eccentric assembly	46	Spacer		
10	Slow speed shaft, bearing B	23	Cooling fan	35	Ring gear roller	47	Cam		
11	Retaining ring	24	Fan cover	36	Ring gear pin	48	Plug (Oil drain)		
12	High speed shaft, bearing A	25	Oil seal	37	Key	49	Spacer		

Note: [1] Gaskets sold in sets.

SHAFT TOLERANCES & SPECIFICATIONS

Table E-25. Single Reduction Cyclo Shaft Tolerances

Single Reduction						
Frame Size	English		Metric			
	Shaft Tolerance (inch)		Frame Size	Shaft Tolerance (mm)	Frame Size	Shaft Tolerance (mm)
	Input	Output		Output		Input
6060, 6065	+0.0000/-0.0004	+0.0000/-0.0004	6060 to 6075	+0.000/-0.011	6060 to 612H	+0.000/-0.011
6070 to 6105	+0.0000/-0.0004	+0.0000/-0.0005	6080 to 610H	+0.000/-0.013	6130 to 616H	+0.000/-0.013
6110, 6115	+0.0000/-0.0004	+0.0000/-0.0006	6110 to 614H	+0.000/-0.016	6170 to 6215	+0.000/-0.016
6120 to 6145	+0.0000/-0.0005	+0.0000/-0.0006	6160 to 6185	+0.000/-0.019	6225 to 6265	+0.000/-0.019
6160, 6165	+0.0000/-0.0005	+0.0000/-0.0007	6190 to 6225	+0.000/-0.022	6275	+0.000/-0.022
6170 to 6185	+0.0000/-0.0006	+0.0000/-0.0007	6235 to 6275	+0.000/-0.025		
6190 to 6215	+0.0000/-0.0006	+0.0000/-0.0009				
6225 to 6265	+0.0000/-0.0007	+0.0000/-0.0009				
6275	+0.0000/-0.0009	+0.0000/-0.0010				

Table E-26. Double Reduction Cyclo Shaft Tolerances

Double Reduction						
Frame Size	English		Metric			
	Shaft Tolerance (inch)		Frame Size	Shaft Tolerance (mm)	Frame Size	Shaft Tolerance (mm)
	Input	Output		Output		Output
6060DA, 6065DA	+0.0000/-0.0004	+0.0000/-0.0004	6060DA, 6065DA, 6070DA, 6075DA, 6090DA, 6095DA, 6100DA, 6105DA, 6120DA, 6120DB, 6125DA, 6125DB,	+0.000/-0.011	6060DA to 6075DA	+0.000/-0.011
6070DA, 6075DA	+0.0000/-0.0004	+0.0000/-0.0005			6090DA to 6105DA	+0.000/-0.013
6090DA, 6095DA	+0.0000/-0.0004	+0.0000/-0.0005			6120DA to 6145DC	+0.000/-0.016
6100DA, 6105DA	+0.0000/-0.0004	+0.0000/-0.0005			6160DA to 6175DC	+0.000/-0.019
6120DA, 6120DB 6125DA, 6125DB	+0.0000/-0.0004	+0.0000/-0.0006	6130DA, 6130DB, 6130DC, 6135DA, 6135DB, 6135DC, 6140DA, 6140DB, 6140DC, 6145DA, 6145DB, 6145DC, 6160DA, 6160DB, 6160DC, 6165DA, 6165DB, 6165DC	+0.000/-0.013	6190DA to 6225DB	+0.000/-0.022
					6235DA to 6275DA	+0.000/-0.025
6130DA, 6130DB 6130DC, 6135DA 6135DB, 6135DC	+0.0000/-0.0004	+0.0000/-0.0006				
6140DA, 6140DB 6140DC, 6145DA 6145DB, 6145DC	+0.0000/-0.0004	+0.0000/-0.0006				
6160DA, 6160DB 6165DA, 6165DB	+0.0000/-0.0004	+0.0000/-0.0007				
6160DC, 6165DC	+0.0000/-0.0005	+0.0000/-0.0007				
6170DA, 6170DB 6175DA, 6175DB	+0.0000/-0.0004	+0.0000/-0.0007				
6170DC, 6175DC	+0.0000/-0.0005	+0.0000/-0.0007	6170DA, 6170DB, 6170DC, 6175DA, 6175DB, 6175DC, 6180DA, 6180DB, 6185DA, 6185DB, 6190DA, 6190DB, 6195DA, 6195DB, 6205DA, 6205DB, 6215DA, 6215DB	+0.000/-0.016		
6180DA, 6185DA	+0.0000/-0.0004	+0.0000/-0.0007				
6180DB, 6185DB	+0.0000/-0.0005	+0.0000/-0.0007				
6190DA, 6190DB 6195DA, 6195DB	+0.0000/-0.0005	+0.0000/-0.0009				
6205DA, 6205DB	+0.0000/-0.0005	+0.0000/-0.0009				
6215DA, 6215DB	+0.0000/-0.0005	+0.0000/-0.0009				
6225DA	+0.0000/-0.0005	+0.0000/-0.0009	6225DA, 6225DB, 6235DA, 6235DB, 6245DA, 6245DB, 6255DA, 6255DB, 6265DA	+0.000/-0.019		
6225DB	+0.0000/-0.0006	+0.0000/-0.0009				
6235DA	+0.0000/-0.0005	+0.0000/-0.0009				
6235DB	+0.0000/-0.0006	+0.0000/-0.0009				
6245DA	+0.0000/-0.0005	+0.0000/-0.0009	6275DA	+0.000/-0.022		
6245DB	+0.0000/-0.0006	+0.0000/-0.0009				
6255DA, 6255DB	+0.0000/-0.0006	+0.0000/-0.0009				
6265DA	+0.0000/-0.0006	+0.0000/-0.0009				
6275DA	+0.0000/-0.0006	+0.0000/-0.0010				

TAPPED HOLE, PAINT & RUST PROOFING SPECIFICATIONS

Table E-27. Slow Speed Shaft Tapped Hole Specifications

English			Metric		
Frame Size	ØS	ℓ (inch)	Frame Size	ØS	ℓ (mm)
6060, 6065	10 - 32UNF	0.63	6060, 6065	M5	16
6070 thru 6085	12 - 28UNF	0.63	6070 thru 6085	M6	16
6090 thru 612H	5/16 - 18UNC	0.79	6090 thru 612H	M8	20
6130 thru 616H	3/8 - 16UNC	0.71	6130 thru 616H	M10	18
6170 thru 6185	1/2 - 13UNC	0.94	6170 thru 6185	M12	24
6190 thru 6225	3/4 - 10UNC	1.34	6190 thru 6225	M20	34
6235, 6245	1 - 8UNC	1.61	6235, 6245	M24	41
6255, 6265	1¼ - 7UNC	1.93	6255, 6265	M30	49
6275	1¼ - 7UNC	2.05	6275	M30	52

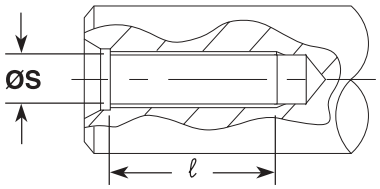

Fig. E-16

Table E-28. Paint Specifications

Paint Classification	Paint Name	Paint Color	Resin Type	Dry Time
Standard	Speed Dry DTM Water Based Enamel	Blue	Water Based Acrylic Polymer	1~1½ hours
Epoxy (Optional)	Heavy-Duty Epoxy	Blue	Polymide Converted Epoxy	4~6 hours
FDA-USDA (Optional)	Food and Beverage Industry Coating	High Gloss White	Modified Alkyd	4~7 hours

Rust proofing treatment is applied to all completely assembled models prior to shipment.

Table E-29. Rust Proofing Specifications

Lubrication Type	Grease	Oil
Rust-Proofing Period	1 Year	6 Months[1]
Storage Condition	Indoor environment that is relatively free of humidity, dust, extreme temperature fluctuation, corrosive gas, etc.	

Notes: [1] All oil-lubricated models for export receive rust-proofing treatment that is effective for 6~12 months. Please specify “Expert Rust-Proofing” for all export models.
[2] Please consult the factory for storage longer than those listed in Table E-29 or in the event of adverse storage conditions.

NOTES

Motor

- **Terminal Box Specifications**
- **Standard Motor Characteristics**
- **Brakemotor Characteristics**

TERMINAL BOX SPECIFICATIONS

Mounting Direction of Terminal Box

The terminal box mounting direction can be changed in units of 90˚; specify the direction according to Table E-30 when placing an order.

Table E-30. Terminal Box Mounting Direction

Cable port direction	Terminal box mounting position (As viewed from output shaft with motor being horizontal)[1]	
	Left side (N33)	Right side (N34)
Type A (N3A)	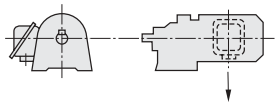	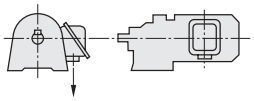
Type B (N3B)	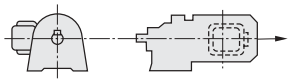	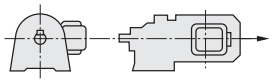
Type C (N3C)	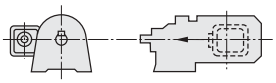	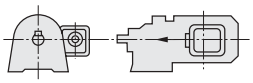
Type D (N3D)	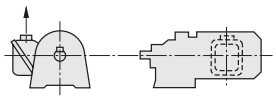	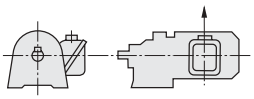

Cable port direction	Terminal box mounting position (As viewed from output shaft with motor being horizontal)[1]	
	Top (N35)	Bottom (N36)
Type A (N3A)	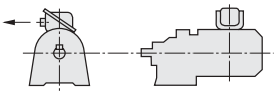	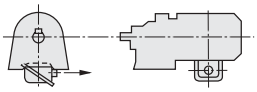
Type B (N3B)	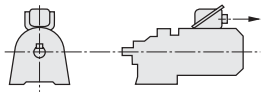	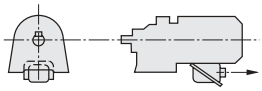
Type C (N3C)	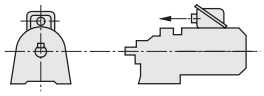	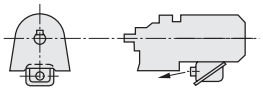
Type D (N3D)	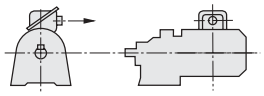	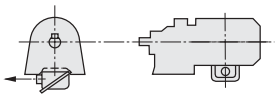

Standard Position of Terminal Box and Direction of Lead Wires

Table E-31. Standard Position of Terminal Box and Direction of Lead Wires

	Horizontal Mounting Configuration (Horizontal Slow Speed Shaft)				Vertical Mounting Configuration (Vertical Slow Speed Shaft Down)	
	Standard Motor		Brake Motor		Standard Motor	Brake Motor
	3 Phase	AF Motor	3 Phase	AF Motor	3 Phase	3 Phase
Terminal Box Mounting Position	Left Side	Left Side	Left Side	Left Side	Left Side	Left Side
Cable Port Direction Type[2]	A (B)	A (B)	A (B)	A (B)	A (A)	A (A)

Notes: [1] Arrow indicates direction of lead wires out of terminal box.
[2] Type show in ( ) is for washdown models.

Motor Cover Mounting Specifications

Refer to the dimension FA or FB when designing the mounting space into which the gearmotor is to fit.

(1) Dimension FA: The space necessary to remove the fan cover or brake cover without removing the motor for the equipment.

(2) Dimension FB: Minimum space required for adequate ventilation.

Notes: 1. It is necessary to remove the gearmotor from the equipment when removing the fan or brake cover.

2. AF (Inverter) motors of 40 HP (30kW) or greater are of a different ventilation type.

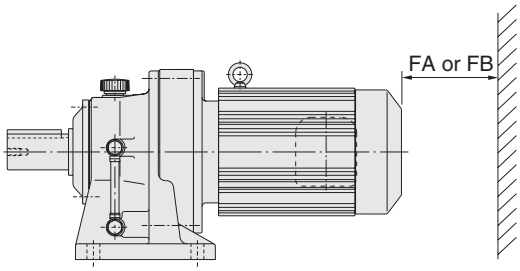

Fig. E-17

Table E-32. Space Requirements

Units: inches (mm)

Motor	Standard Motor				Brake Motor			
HP (kW) x Pole	3 Phase		Inverter Duty		3 Phase		Inverter Duty	
	FA	FB	FA	FB	FA	FB	FA	FB
1/8(0.1) x 4	-	-	1.9 (48)	0.8 (20)	2.0 (49)	-	2.5 (61)	0.8 (20)
1/4(0.2) x 4	1.9 (48)	0.8 (20)	1.9 (48)	0.8 (20)	2.5 (61)	0.8 (20)	2.5 (61)	0.8 (20)
1/3(0.25) x 4	1.9 (48)	0.8 (20)	1.9 (48)	0.8 (20)	2.5 (61)	0.8 (20)	2.5 (61)	0.8 (20)
1/2(0.4) x 4	1.9 (48)	0.8 (20)	2.0 (49)	0.8 (20)	2.5 (61)	0.8 (20)	3.7 (93)	0.8 (20)
3/4(0.55) x 4	2.0 (49)	0.8 (20)	2.1 (52)	0.8 (20)	3.7 (93)	0.8 (20)	4.6 (115)	0.8 (20)
1(0.75) x 4	2.0 (49)	0.8 (20)	2.1 (52)	0.8 (20)	3.7 (93)	0.8 (20)	4.6 (115)	0.8 (20)
1.5(1.1) x 4	2.1 (52)	0.8 (20)	2.2 (56)	0.8 (20)	4.6 (115)	0.8 (20)	5.2 (132)	0.8 (20)
2(1.5) x 4	2.1 (52)	0.8 (20)	2.2 (56)	0.8 (20)	4.6 (115)	0.8 (20)	5.2 (132)	0.8 (20)
3(2.2) x 4	2.2 (56)	0.8 (20)	2.4 (60)	0.8 (20)	5.2 (132)	0.8 (20)	5.2 (132)	0.8 (20)
5(3.7) x 4	2.4 (60)	0.8 (20)	2.4 (60)	0.8 (20)	5.2 (132)	0.8 (20)	5.2 (132)	0.8 (20)
7.5(5.5) x 4	2.4 (60)	0.8 (20)	3.0 (75)	1.0 (25)	5.2 (132)	0.8 (20)	6.7 (170)	1.0 (25)
10(7.5) x 4	3.0 (75)	1.0 (25)	3.0 (75)	1.0 (25)	6.7 (170)	1.0 (25)	6.7 (170)	1.0 (25)
15(11) x 4	3.0 (75)	1.0 (25)	5.2 (130)	1.2 (30)	6.7 (170)	1.0 (25)	8.7 (220)	1.2 (30)
20(15) x 4	5.2 (130)	1.2 (30)	6.2 (155)	1.2 (30)	8.7 (220)	1.2 (30)	14.5 (367)	1.2 (30)
25(18.5) x 4	6.2 (155)	1.2 (30)	6.7 (170)	1.2 (30)	14.5 (367)	1.2 (30)	14.6 (370)	1.2 (30)
30(22) x 4	6.2 (155)	1.2 (30)	6.7 (170)	1.2 (30)	14.5 (367)	1.2 (30)	14.6 (370)	1.2 (30)
40(30) x 4	6.7 (170)	1.2 (30)	5.6 (140)	1.2 (30)	14.6 (370)	1.2 (30)	11.7 (295)	1.2 (30)
50(37) x 4	9.1 (230)	1.2 (30)	5.6 (140)	1.2 (30)	17.6 (445)	1.2 (30)	11.7 (295)	1.2 (30)

TERMINAL BOX SPECIFICATIONS

Conduit Box Dimensions

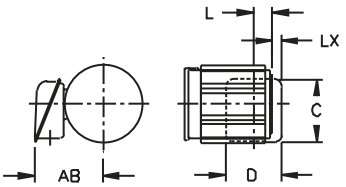

Standard Indoor Duty

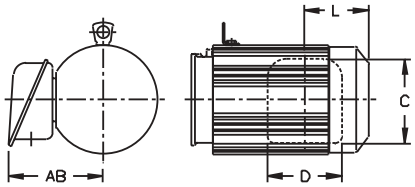

UL Indoor Duty

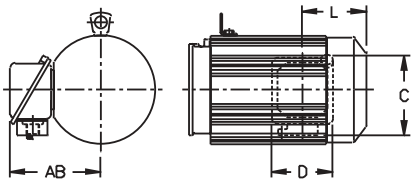

Non UL & UL Washdown Duty

Table E-33. Terminal Box Mounting Centers

Frame Size	Duty Rating	AB	C	D	L	LX
F-63S	Non-UL Indoor Duty	4.13	3.76	3.35	1.14	.53
	UL Indoor Duty	5.20	5.44	4.80	1.14	1.26
	Non-UL & UL Washdown Duty	5.00	5.20	3.94	1.14	.83
F-63M	Non-UL Indoor Duty	4.13	3.76	3.35	2.13	-
	UL Indoor Duty	5.20	5.44	4.80	2.13	.28
	Non-UL & UL Washdown Duty	5.00	5.20	3.94	2.13	-
F-71M	Non-UL Indoor Duty	4.13	3.76	3.35	2.13	-
	UL Indoor Duty	5.20	5.44	4.80	2.13	.28
	Non-UL & UL Washdown Duty	5.00	5.20	3.94	2.13	-
F-80S F-80M	Non-UL Indoor Duty	4.49	3.78	3.35	3.82	-
	UL Indoor Duty	5.59	5.44	4.80	3.82	-
	Non-UL & UL Washdown Duty	5.36	5.20	3.94	3.82	-
F-90S F-90L	Non-UL Indoor Duty	4.68	3.78	3.35	3.94	-
	UL Indoor Duty	5.79	5.44	4.80	3.94	-
	Non-UL & UL Washdown Duty	5.56	5.20	3.94	3.94	-
F-100L	Non-UL Indoor Duty	4.96	3.78	3.35	4.13	-
	UL Indoor Duty	6.06	5.44	4.80	4.13	-
	Non-UL & UL Washdown Duty	5.84	5.20	3.94	4.13	-
F-112M	Non-UL Indoor Duty	5.80	4.38	3.94	5.00	-
	UL Indoor Duty	6.69	5.44	4.80	5.00	-
	Non-UL & UL Washdown Duty	7.20	5.98	4.84	5.00	-
F-132S	Non-UL Indoor Duty	5.80	4.38	3.94	5.00	-
	UL Indoor Duty	6.69	5.44	4.80	5.00	-
	Non-UL & UL Washdown Duty	7.20	5.98	4.84	5.00	-
F-132M	Non-UL Indoor Duty	7.40	5.44	4.80	5.63	-
	UL Indoor Duty	7.40	5.44	4.80	5.63	-
	Non-UL & UL Washdown Duty	8.74	7.37	6.06	5.63	-
F-160M	Non-UL Indoor Duty	7.40	5.44	4.80	5.63	-
	UL Indoor Duty	7.40	5.44	4.80	5.63	-
	Non-UL & UL Washdown Duty	8.74	7.37	6.06	5.63	-

Dimensions of Terminal Box Mounting Centers

Fig. E-18

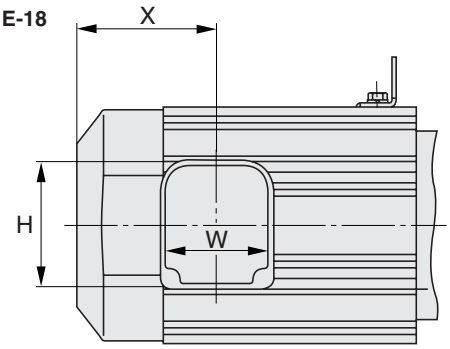

3-phase 1/8HP-75HP (0.1kW~55kW)
AF 1/8HP-50HP (0.1kW~37kW)

Table E-34. Terminal Box Mounting Centers

Units: inches (mm)

Motor	Standard Motor						Brake Motor					
HP (kW) x Pole	3 Phase			Inverter Duty			3 Phase			Inverter Duty		
	X	W	H	X	W	H	X	W	H	X	W	H
1/8(0.1) x 4	1.4(35)	3.3(85)	3.8(96)	2.3(59)	3.3(85)	3.8(96)	2.8(70)	3.94(100)	4.37(111)	3.6(91)	3.94(100)	4.37(111)
1/4(0.2) x 4	2.3(59)	3.3(85)	3.8(96)	2.3(59)	3.3(85)	3.8(96)	3.6(91)	3.94(100)	4.37(111)	3.6(9.1)	3.94(100)	4.37(111)
1/3(0.25) x 4	2.3(59)	3.3(85)	3.8(96)	-	-	-	3.6(91)	3.94(100)	4.37(111)	-	-	-
1/2(0.5) x 4	2.3(59)	3.3(85)	3.8(96)	3.8(97)	3.3(85)	3.8(96)	3.6(91)	3.94(100)	4.37(111)	5.5(140)	3.3(85)	3.8(96)
3/4(0.55) x 4	3.8(97)	3.3(85)	3.8(96)	-	-	-	5.5(140)	3.3(85)	3.8(96)	-	-	-
1(0.75) x 4	3.8(97)	3.3(85)	3.8(96)	3.9(100)	3.3(85)	3.8(96)	5.5(140)	3.3(85)	3.8(96)	6.4(162)	3.3(85)	3.8(96)
1.5(1.1) x 4	3.9(100)	3.3(85)	3.8(96)	-	-	-	6.4(162)	3.3(85)	3.8(96)	-	-	-
2(1.5) x 4	3.9(100)	3.3(85)	3.8(96)	4.1(105)	3.3(85)	3.8(96)	6.4(162)	3.3(85)	3.8(96)	6.6(168)	3.3(85)	3.8(96)
3(2.2) x 4	4.1(105)	3.3(85)	3.8(96)	5.0(127)	3.9(100)	4.4(111)	6.6(168)	3.3(85)	3.8(96)	7.8(199)	3.9(100)	4.4(111)
5(3.7) x 4	5.0(127)	3.9(100)	4.4(111)	5.0(127)	3.9(100)	4.4(111)	7.8(199)	3.9(100)	4.4(111)	7.8(199)	3.9(100)	4.4(111)
7.5(5.5) x 4	5.0(127)	3.9(100)	4.4(111)	5.6(143)	4.8(122)	5.6(141)	7.8(199)	3.9(100)	4.4(111)	9.4(238)	4.8(122)	5.6(141)
10(7.5) x 4	5.6(143)	4.8(122)	5.6(141)	5.6(143)	4.8(122)	5.6(141)	9.4(238)	4.8(122)	5.6(141)	9.4(238)	4.8(122)	5.6(141)
15(11) x 4	5.6(143)	4.8(122)	5.6(141)	11.6(295)	4.8(122)	5.6(141)	9.4(238)	4.8(122)	5.6(141)	15.2(385)	4.8(122)	5.6(141)
20(15) x 4	11.6(295)	4.8(122)	5.6(141)	13.4(340)	6.5(166)	7.4(187)	15.2(385)	4.8(122)	5.6(141)	21.7(550)	6.5(166)	7.4(187)
25(18.5) x 4	13.4(340)	6.5(166)	7.4(187)	13.4(340)	6.5(166)	7.4(187)	21.7(550)	6.5(166)	7.4(187)	21.7(550)	6.5(166)	7.4(187)
30(22) x 4	13.4(340)	6.5(166)	7.4(187)	13.4(340)	6.5(166)	7.4(187)	21.7(550)	6.5(166)	7.4(187)	21.7(550)	6.5(166)	7.4(187)
40(30) x 4	13.4(340)	6.5(166)	7.4(188)	18.1(460)	6.5(166)	7.4(188)	21.7(550)	6.5(166)	7.4(188)	28.0(712)	6.5(166)	7.4(188)
50(37) x 4	16.9(430)	6.5(166)	7.4(188)	18.1(460)	6.5(166)	7.4(188)	25.4(645)	6.5(166)	7.4(188)	28.0(712)	6.5(166)	7.4(188)
60(45) x 4	16.9(430)	6.5(166)	7.4(188)	19.5(495)	9.4(240)	10.6(268)	25.4(645)	6.5(166)	7.4(188)	26.4(670)	9.4(240)	7.4(188)
75(55) x 4	18.3(465)	9.4(240)	10.6(268)	21.1(535)	9.4(240)	10.6(268)	-	-	-	-	-	-

STANDARD MOTOR CHARACTERISTICS

Standard Motor Data

Full Load ratings and amperage for SM-Cyclo® gearmotors are listed in Tables E-34~E-37. These ratings are based on the motors' design values. If additional information is required, please consult the factory.

Table E-35. 230/460 V, Synchronous Speed 1800 RPM, 60 Hz, Continuous Duty, TEF

HP	Frame Size	Full Load			Full Load Current (A)			Starting Current (A)		Torque (% of F.L.)		Efficiency (Percent)	Power Factor (Percent)	Code Letter[1]	Inertia WR²	
		RPM	Torque		230V	460V	208V	230V	460V	Starting	Breakdown				lb•in²	kg•m²
			in•lbs	N•m												
1/8[2]	F-63S	1730	4.50	0.5084	0.7	0.35	0.65	2.8	1.4	326	329	64.0	59.5	K	1.11	0.0003
1/4	F-63M	1730	9.06	1.02	1.1	0.6	1.1	5.2	2.6	300	293	69.8	65.2	K	1.71	0.0005
1/3	F-63M	1710	12.3	1.38	1.3	0.65	1.3	5.2	2.6	232	232	70.8	72.0	G	1.71	0.0005
1/2	F-71M	1740	18.3	2.07	2.1	1.1	2.0	9.8	4.9	295	280	71.9	65.1	J	2.22	0.0007
3/4	F-80S	1730	27.4	3.10	2.5	1.2	2.5	12.3	6.2	266	245	76.9	73.0	H	3.45	0.0010
1	F-80	1750	36.0	4.07	3.4	1.7	3.4	17.6	8.8	269	303	77.2	72.3	H	4.10	0.0012
1.5	F-90S	1730	54.7	6.18	4.7	2.4	4.7	28.6	14.3	273	281	80.3	74.1	J	6.32	0.0019
2	F-90L	1740	72.5	8.19	6.1	3.0	6.2	36.8	18.4	263	270	82.3	75.6	J	7.28	0.0021
3	F-100L	1730	109	12.3	8.5	4.3	8.7	54.8	27.4	277	266	84.4	77.2	J	11.4	0.0033
5	F-112M	1730	183	20.7	13.1	6.6	13.7	91.5	45.8	308	279	86.3	82.4	J	29.0	0.0085
7.5	F-132S	1710	277	31.3	18.1	9.0	20.1	120	60	230	223	86.9	88.1	H	39.0	0.0114
10	F-132M	1740	361	40.8	23.6	11.8	26.4	147	73.5	212	214	89.6	88.9	G	91.6	0.0268
15	F-160M	1740	542	61.2	34.3	17.2	38.2	231	115	248	221	90.4	89	G	128	0.0375
20	G-160L	1740	725	81.9	45.8	22.9	51.0	272	136	222	220	91.6	89.9	F	307	0.0898
25	G-180M	1770	891	101	57.0	28.4	63.0	343	171	199	235	92.6	88.2	F	769	0.2250
30	G-180M	1760	1075	121	68.0	34.2	77.0	388	194	192	226	91.5	88.1	F	769	0.2250
40	F-180L	1750	1442	163	93.0	46.3	100	704	352	310	274	92.2	88.3	H	854	0.2500
50	F-200L	1740	1812	205	114	57.0	124	904	452	340	286	92.1	88.5	J	1053	0.3080
60	F-200L	1740	2175	246	138	69.0	150	1078	539	340	279	92.5	88.4	J	1172	0.3430
75	F-225S	1750	2703	305	167	83.0	183	1257	629	277	282	92.2	89.8	H	2307	0.6750

Table E-36. Synchronous Speed 1200 RPM, 60 Hz, Continuous Duty

HP	Frame Size	Full Load			Full Load Current (A)		Starting Current (A)		Torque (% of F.L.)		Efficiency (Percent)	Power Factor (Percent)	Code Letter[1]	Inertia WR²	
		RPM	Torque		230V	460V	230V	460V	Starting	Breakdown				lb•in²	kg•m²
			in•lbs	N•m											
20	G-180M	1160	1087	122.82	52	25.9	327	163	263	254	91.3	79.5	H	1084	0.317
25	F-180L	1160	1359	153.55	59	29.7	412	206	261	286	90.9	86	H	1238	0.362
30	F-180L	1170	1617	182.7	71	35.6	506	253	273	297	92.4	83.8	H	1238	0.362
40	F-200L	1180	2138	241.57	95	47.6	703	352	318	305	93.1	85	H	1627	0.476
50	F-200L	1170	2695	304.51	117	59	923	462	348	327	92.9	85.1	J	2045	0.598
60	F-225S	1170	3234	365.41	140	70	963	481	290	267	92.6	86.9	H	3413	1.00
75	F-250S	1160	4078	460.77	170	85	1141	570	289	259	93.0	87.2	G	4018	1.18

Notes: [1] Code letter shown is for 230V or 460V operation. Consult the factory for other voltages.
[2] 1/8 HP is TENV.

Table E-37. 575 Volt, Synchronous Speed, 1800 RPM, 60 Hz, Continuous Duty

HP	Frame Size	Full			Full Load Current (A)	Starting Current (A)	Torque (% of F.L.)		Efficiency (Percent)	Power Factor (Percent)	Code Letter[1]	Inertia WR²	
		RPM	Torque		575V	575V	Starting	Breakdown				lb•in²	kg•m²
			in•lbs	N•m									
1/8**	F-63S	1720	4.58	0.5175	0.28	1.3	376	391	65.2	54.1	L	1.11	0.0003
1/4	F-63M	1720	9.17	1.04	0.48	2.2	316	340	69.4	60.3	K	1.71	0.0005
1/3	F-63M	1710	12.8	1.45	0.52	2.2	250	270	71.3	67.7	H	1.71	0.0005
1/2	F-71M	1700	18.6	2.10	0.79	3.7	309	300	75.8	67.4	H	2.22	0.0006
3/4	F-80S	1720	27.5	3.11	0.94	4.5	247	227	77.4	75.9	G	3.27	0.0010
1	F-80M	1680	37.5	4.24	1.3	6.6	252	256	78.1	74.9	H	4.10	0.0012
1.5	F-90S	1720	55.1	6.23	1.8	11.5	280	294	81.5	75.0	J	6.49	0.0019
2	F-90L	1720	73.3	8.28	2.3	14.3	264	268	82.5	77.8	H	7.26	0.0021
3	F-100L	1710	111	12.5	3.3	21.3	269	264	84.2	79.5	J	11.4	0.0033
5	F-112M	1730	182	20.6	5.2	39.5	268	271	86.6	82.7	J	28.9	0.0085
7.5	F-132S	1720	278	31.4	7.7	62	298	263	87.1	82.6	K	39.0	0.0114
10	F-132M	1740	362	40.9	9.7	74	275	266	89.9	86.4	J	91.4	0.0268
15	F-160M	1750	540	61.0	14.1	113	305	275	90.4	86.6	J	128	0.0375
20	G-160L	1770	713	80.6	18.7	147	310	304	92.6	86.9	J	307	0.0897
25	G-180M	1780	886	100.1	23.7	190	281	332	93.2	84.2	J	769	0.2250
30	G-180M	1780	1063	120	27.6	190	238	278	93.2	85.8	G	769	0.2250
40	F-180L	1780	1417	160	37.1	282	311	275	92.1	88.2	H	854	0.2498
50	F-200L	1780	1772	200	45.0	355	333	281	93.0	88.9	H	1051	0.3076

Table E-38. Single Phase, 115/230V, Synchronous Speed, 1800 RPM, 60 Hz, TEFC

HP	RPM	Frame Size	Full Load Amp.		Inertia WR²	
			115 V	230 V	lb•in²	kg•m²
1/8	1750	S-71S	3.4	1.7	5.13	0.0015
1/4		S-71S	4.2	2.1	5.13	0.0015
1/3		S-71	6.5	3.2	7.69	0.0022
1/2		S-71	7.1	3.5	7.69	0.0022
3/4		S-90	10.8	5.4	20.5	0.0060
1		S-90	12.8	6.4	20.5	0.0060

Standard Wiring Diagrams

Illustrated below are the wiring diagrams for our standard motors. For additional information, please refer to motor name plate. Due to changes in design features, this diagram may not always agree with that on the motor. If different, the motor diagram found inside the conduit box cover is correct.

A. Three Phase Motors

Y-Connected (5 HP and smaller)

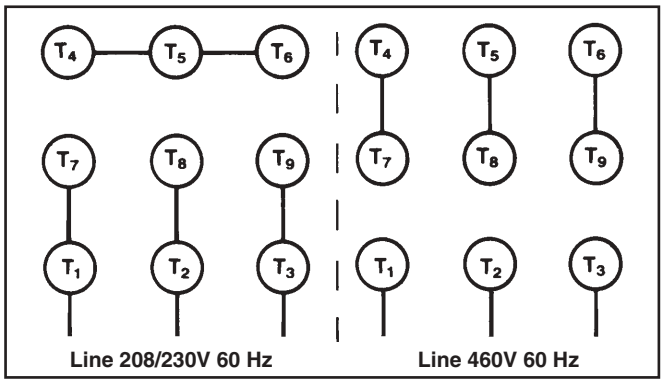

Delta-Connected (7.5 HP and larger)

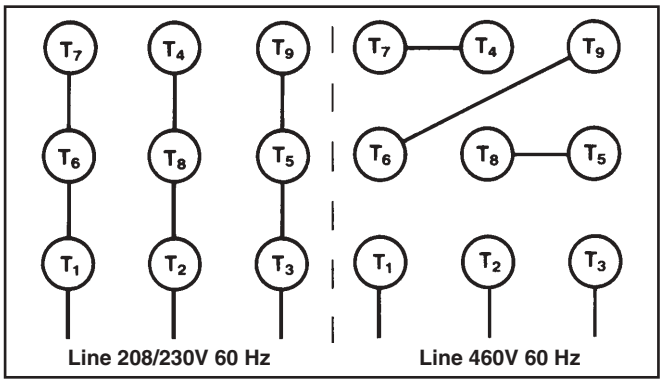

B. Single Phase Motors

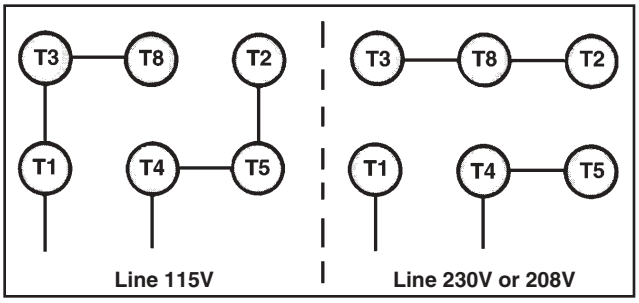

Note: [1] Code letter shown is for 230V or 460V operation. Consult the factory for other voltages.

ASSEMBLY DRAWINGS

Assembly of Motors

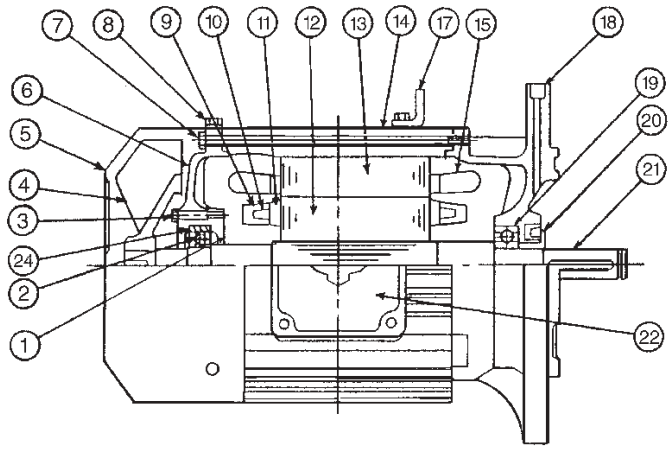

Fig. E-19 Frame Size F-63M thru F-160M

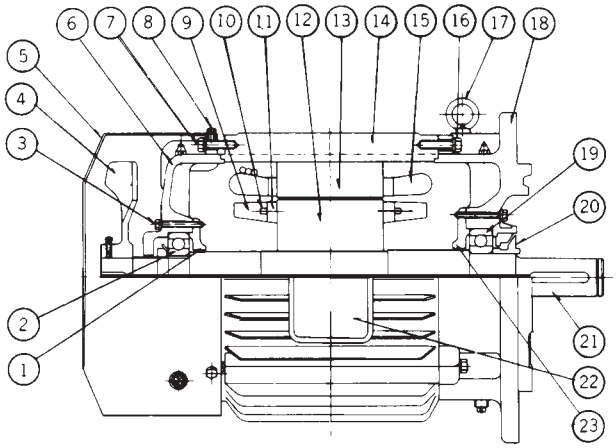

Fig. E-20 Frame Size G-160L and Larger

Table E-39. Part Name

1	Bearing Cover[1]
2	Bearing
3	Bolt[1]
4	Fan[2]
5	Fan Cover
6	End Bracket
7	Bolt
8	Bolt
9	Internal Fan
10	Hub
11	Short Circuit Ring
12	Rotor Core
13	Stationary Core
14	Stator Frame
15	Stator Winding
16	Bolt
17	Eye Bolt
18	Cyclo Flange Bracket
19	Bearing
20	Slinger/Oil Seal
21	Motor Shaft
22	Conduit Box
23	Bearing Cover
24	Bearing Sleeve

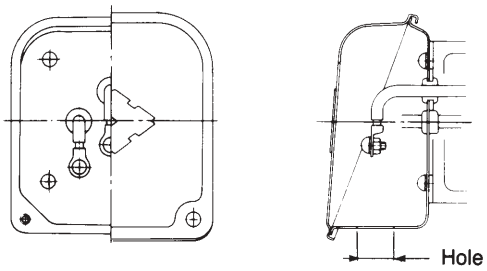

Fig. E-21 Conduit Box-Standard Type

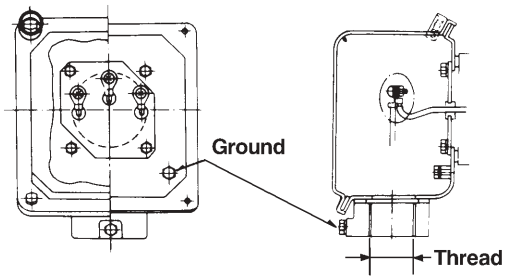

Fig. E-22 Weather-Proof Type

Notes: [1] Parts not included in F-63 through F-132S Motors.
[2] No Fan 1/8 H.P., F-63S frame.

THERMAL RATING

Motor Thermal Rating (C x Z)

Table E-40. Motor Thermal Rating (C x Z)

Motor Power HP (kW)	Allowable C x Z				Motor Moment of Inertia lb•in² (GD²)	
	35% ED[1]	35%~50% ED[1]	50~80% ED[1]	80~100% ED[1]	Standard	with Brake
1/8 (0.1)	3200	3000	2000	1200	1.11 (3.25)	1.20 (3.50)
1/4 (0.2)	2200	2800	2800	2500	1.71 (5.00)	1.88 (5.50)
1/3 (0.25)	2200	2800	2800	2500	1.71 (5.00)	1.88 (5.50)
1/2 (0.4)	1800	2200	1500	1500	2.22 (6.50)	2.31 (6.75)
3/4 (0.55)	1800	2200	1500	1500	3.45 (10.1)	3.79 (11.1)
1 (0.75)	1400	1400	800	500	4.10 (12.0)	4.44 (13.0)
1.5 (1.1)	1400	1400	800	500	6.32 (18.5)	7.11 (20.8)
2 (1.5)	1200	1200	500	400	7.28 (21.3)	8.03 (23.5)
3 (2.2)	1000	900	400	200	11.4 (33.3)	12.8 (37.3)
5 (3.7)	800	800	800	700	29.0 (84.8)	32.7 (95.8)
7.5 (5.5)	300	300	200	150	39.0 (114)	42.7 (125)
10 (7.5)	400	350	300	300	91.6 (268)	104 (303)
15 (11)	200	200	150	150	128 (375)	140 (410)

The calculated C x Z value (steps 1 – 3 outlined below) should be less than the allowable value listed in Table E-39.

1. Obtain the C value:

$$C = \frac{I_M + I_L}{I_M}$$

I_M = Moment of Inertia of Motor.
I_L = Total Moment of Inertia of Load as seen from the motor.

2. Obtain the Z value (number of starts per hour):

a. Assume that one operating period consists of “on-time” ta (sec.), “off-time” tb (sec.) and the motor is started nr (times/sec.).

$$Zr = \frac{3600nr}{ta + tb} \text{ (times/hour)}$$

b. When inching, ni (times/cycle) is included in 1 cycle (ta + tb), the number of inching times per hour Zi, is then included in the number of starts.

$$Zi = \frac{3600ni}{ta + tb} \text{ (times/hour)}$$

c. Calculate Z by adding Zr to Zi.

$$Z = Zr + \frac{1}{2}\ Zi = \frac{3600}{ta + tb} \bullet \left(nr + \frac{1}{2}\ ni\right) \text{ (times/hour)}$$

3. Calculate C multiplied by Z:

Use the value of C obtained in step (1) and Z from step (2)

4. Obtain the duty cycle (%ED) and check with Table E-40:

$$\%ED = \frac{ta}{ta + tb} \times 100$$

ta = on-time
tb = off-time

Note: [1] % ED = duty cycle

BRAKEMOTOR CHARACTERISTICS

Brakemotor Data

The brakemotor on SM-CYCLO gearmotors operates with direct current supplied by a dual voltage rectifier mounted in the motor conduit box.

The standard brake input voltage is 208V OR 230V OR 460V at 60 Hz.

When used for outdoor installations, our standard brakemotor must be protected by some type of cover. Such covers are available from the factory; please inquire when ordering.

Note: If you require larger or smaller brake torque than those listed, please advise the factory when ordering.

Table E-41. Required Brake Torque

Condition	% Motor Torque	Typical Application	Remarks
Rapid Brake Action	100%	Machine Tool Cutter and Table Transfer	
Frequent Start/Stop	100%	Conveyor Drive	Fast Brake Action May Be Required
Rapid Braking and Fail Safe	Over 150%	Crane, Hoist Winch, Gate, Lifting	Wiring Connection for Fast Brake Action
Rapid Deceleration of High Inertia	Over 150%	Centrifuge Drive Textile	

Table E-42. Brakemotor Characteristics

HP	Type		Brake Torque				Inertia WR²		Brake Delay Time (sec)		Coil Current (AC Amperage)		
	Motor Frame	Brake Model	Standard		Maximum		lb•in²	kg•m²	Normal Braking Action	Fast Braking Action	208V	230V	460V
			ft•lbs	N•m	ft•lbs	N•m							
1/8	F-63S	FB-01A	0.7	1.0	1.0	1.4	1.20	0.0004	0.15~0.2	0.015~0.02	0.06	0.06	0.04
1/4	F-63M	FB-02A	1.5	2.0	2.0	2.7	1.88	0.0006	0.15~0.2	0.015~0.02	0.1	0.1	0.06
1/3	F-63M	FB-02A	1.5	2.0	2.9	3.9	1.88	0.0006	0.15~0.2	0.015~0.02	0.1	0.1	0.06
1/2	F-71M	FB-05A	3.0	4.0	2.9	3.9	2.31	0.0007	0.1~0.15	0.01~0.015	0.1	0.1	0.06
3/4	F-80S	FB-1B	5.5	7.5	7.7	10.4	3.79	0.0011	0.2~0.3	0.01~0.02	0.1	0.1	0.1
1	F-80M	FB-1B	5.5	7.5	7.7	10.4	4.44	0.0013	0.2~0.3	0.01~0.02	0.1	0.1	0.1
1.5	F-90S	FB-2B	11	15.0	14.0	19.0	7.11	0.0021	0.2~0.3	0.01~0.02	0.3	0.3	0.2
2	F-90L	FB-2B	11	15.0	14.0	19.0	8.03	0.0024	0.2~0.3	0.01~0.02	0.3	0.3	0.2
3	F-100L	FB-3B	16	22.0	21.0	28.5	12.7	0.0037	0.3~0.4	0.01~0.02	0.4	0.4	0.2
5	F-112M	FB-5B	27	37.0	36.0	48.8	32.7	0.0096	0.4~0.5	0.01~0.02	0.4	0.5	0.3
7.5	F-132S	FB-8B	41	55.0	53.0	71.9	42.7	0.0125	0.3~0.4	0.01~0.02	0.4	0.5	0.3
10	F-132M	FB-10B	55	75.0	72.0	97.6	104	0.0303	0.7~0.8	0.03~0.04	0.7	0.8	0.5
15	F-160M	FB-15B	81	110	80.0	108	140	0.0410	0.5~0.6	0.03~0.04	0.7	0.8	0.5
20	G-160L	CMB-20	74	100	80.0	108	455	0.1330	0.6~0.8	0.1~0.15	1.5	1.7	1.9
25	G-180L	ESB220	92	125	—	—	793	0.232	0.075	—	—	0.947	—
30	G-180L		111	150	—	—	793	0.232	0.075	—	—	0.947	—
40	F-180L		148	200	—	—	878	0.257	0.075	—	—	0.947	—
50	F-200L	ESB250	184	250	—	—	1097	0.321	0.065	—	—	1.154	—

STANDARD WIRING CONNECTION, DUAL VOLTAGE

A. Models FB-01A through FB-15B

Fig. E-23 Normal Brake Action, Low Voltage

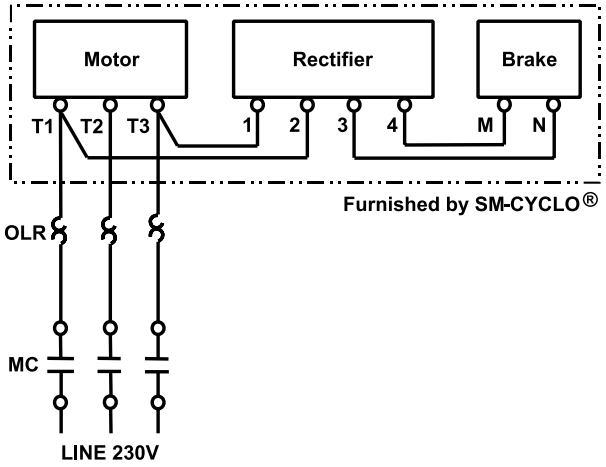

Fig. E-24 Fast Brake Action, Low Voltage

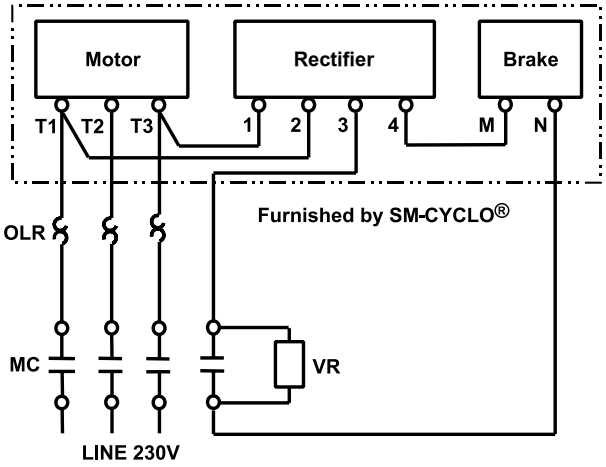

Fig. E-25 Normal Brake Action, High Voltage

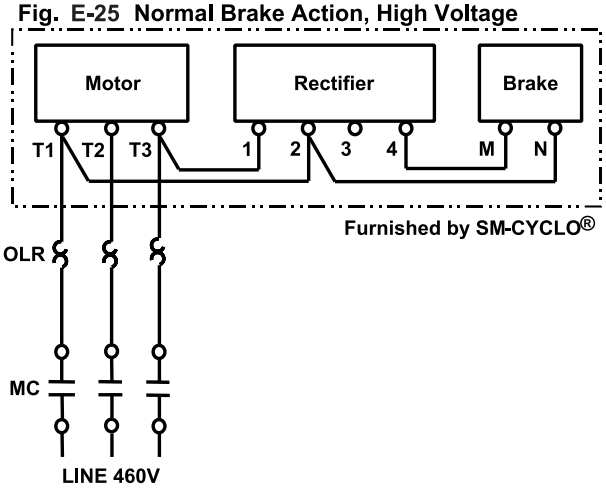

Fig. E-26 Fast Brake Action High Voltage

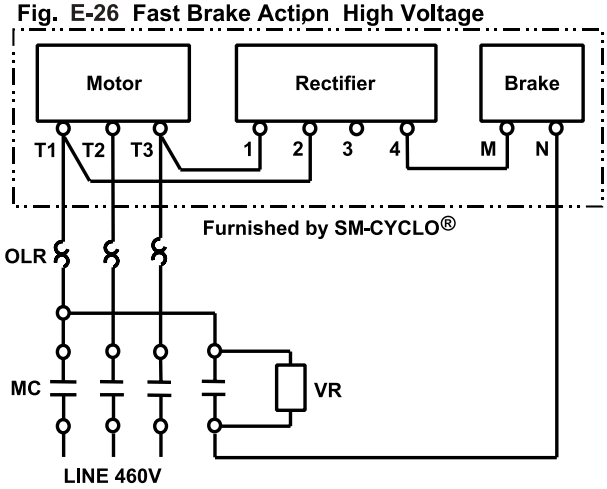

MC: Electromagnetic Relay
MCB: Magnetic Circuit Breaker
OLR: Overload or Thermal Relay
VR: Varistor (protective device)[1]

Table E-43. Varistor Specifications

Operating Voltage		200-230V	380-460V	575V
Varistor Rated Voltage		AC260~300V	AC510V	AC604V
Varistor Voltage		430~470V	820V	1000V
Rated Watt	FB01A, 02A	Over 0.2W	Over 0.4W	
	FB-05A	Over 0.2W	Over 0.4W	
	FB-1B	Over 0.4W	Over 0.6W	Over 0.4W
	FB-2B, 3B	Over 0.6W	Over 1.5W	Over 0.6W
	FB-5B, 8B	Over 0.6W	Over 1.5W	Over 1.5W
	FB10B, 15B	Over 1.0 W	Over 1.5W	Over 1.5W

Note: [1] Refer to Table E-42 for Varistor Specifications.

STANDARD WIRING CONNECTION, DUAL VOLTAGE

B. Model CMB-20

Fig. E-27 Normal Brake Action, Low Voltage

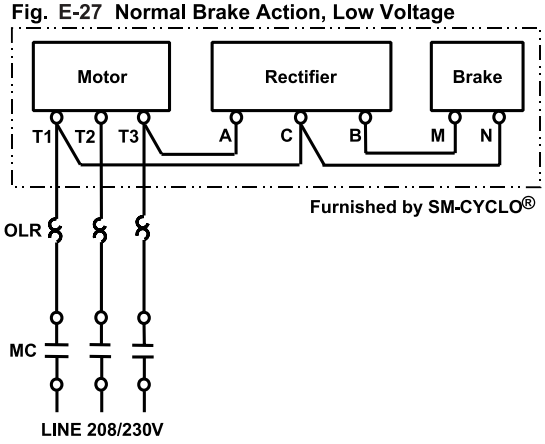

Fig. E-28 Fast Brake Action, Low Voltage

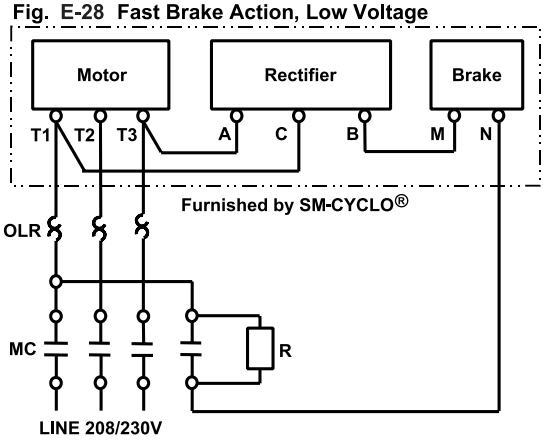

Fig. E-29 Normal Brake Action, High Voltage

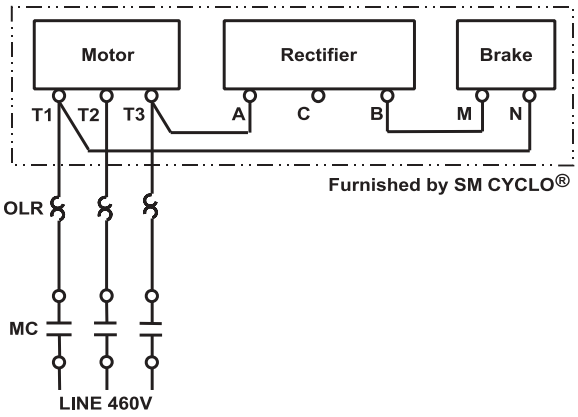

Fig. E-30 Fast Brake Action, High Voltage

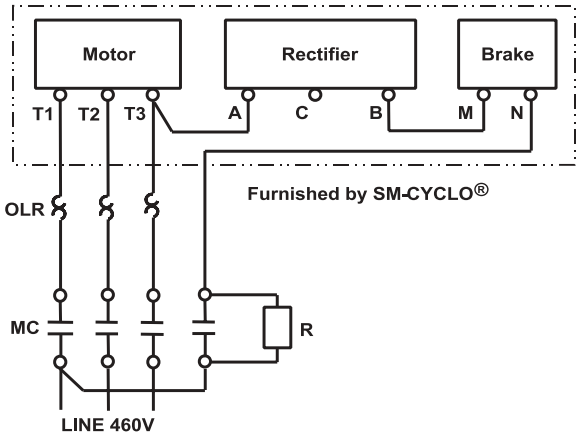

OLR: Overload or Thermal Relay
MC: Electromagnetic Relay
R: Resistor (2 Watt, 200~300Ω)

C. FB Brake (1/8 HP – 10 HP) with Inverter

Fig. E-31 Normal Brake Action, Low Voltage

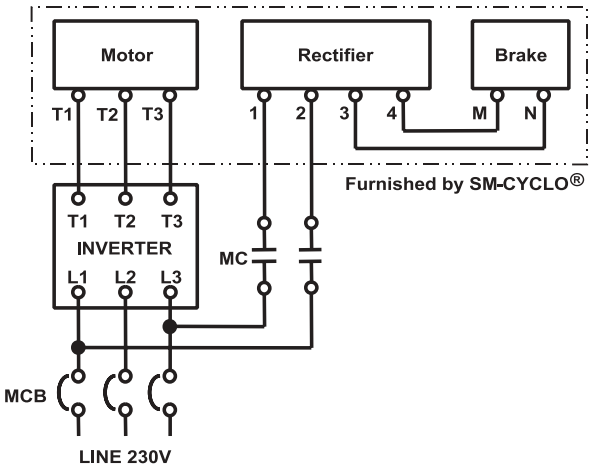

Fig. E-32 Fast Brake Action, Low Voltage

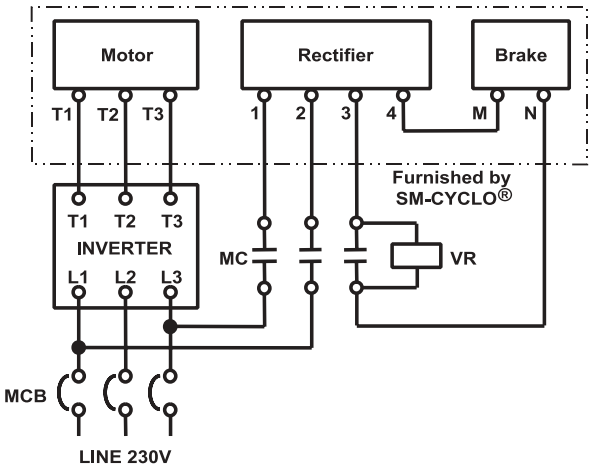

Fig. E-33 Normal Brake Action, High Voltage

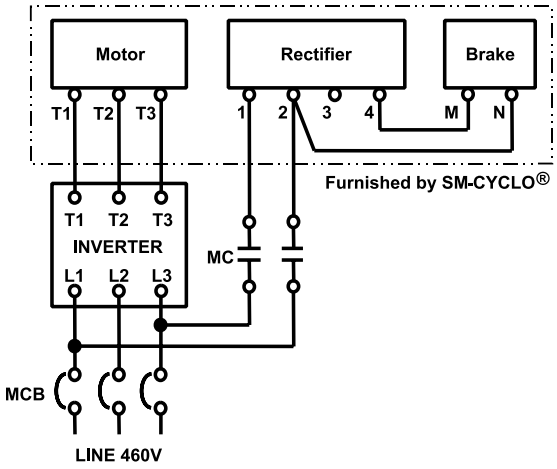

Fig. E-34 Fast Brake Action, High Voltage

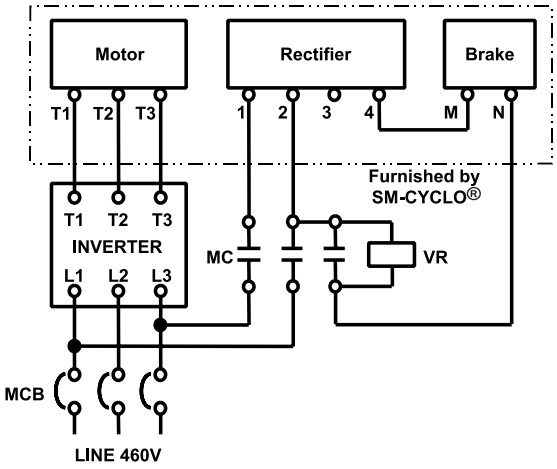

MC: Electromagnetic Relay
MCB: Magnetic Circuit Breaker
VR: Varistor (protective device)[1]

Note: [1] Refer to Table E-42 for Varistor Specifications.

ASSEMBLY OF BRAKEMOTORS

A. Types FB-01A, 02A, 05A, 1B, 2B, 3B, 5B, 8B, 10B, and 15B

Fig. E-35 Brakemotor

a.

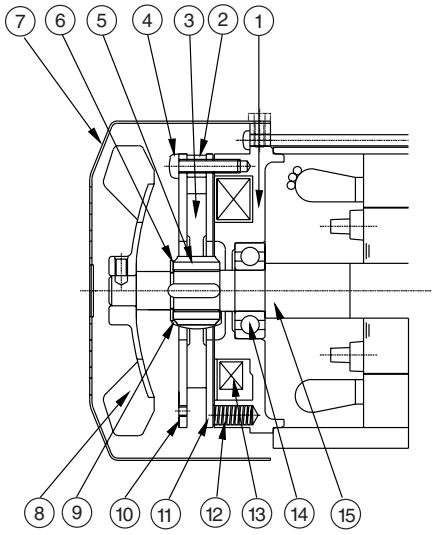

Type FB-01A, 02A, 05A

b.

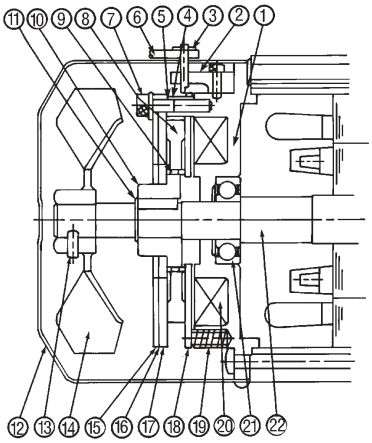

Type FB-1B thru 3B

c.

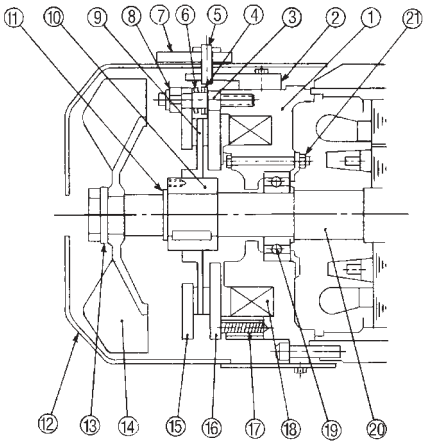

Type FB-5B thru 15B

Table E-44a. Type FB-01A, -02A, -05A

Part No.	Description
1	Stationary Core
2	Spacer
3	Brake Lining
4	Restraining Bolt
5	Hub
6	C-type Retaining Ring
7	Cover
8	Fan (TEFC model only)
9	Leaf Spring
10	Brake Shoe
11	Armature
12	Pressure Spring
13	Solenoid Coil
14	Ball Bearing
15	Motor Shaft

Table E-44b. Type FB-1B thru 3B

Part No.	Description
1	Stationary Core
2	Brake Release Support
3	Shifting Pin
4	Spacer
5	GAP Adjusting Sleeve
6	Brake Release Lever
7	Restraining Bolt
8	Brake Lining
9	Leaf Spring
10	Hub
11	Retaining Ring
12	Fan Cover
13	Fan Set Screw
14	Fan
15	Fixed Plate
16	Noise Shield
17	Brake Shoe
18	Armature Plate
19	Pressure Spring
20	Solenoid Coil
21	Fan Side Motor Bearing
22	Motor Shaft

Table E-44c. Type FB-5B thru 15B

Part No.	Description
1	Stationary Core
2	Brake Release Support
3	Stud Bolt
4	GAP Adjusting Sleeve
5	Shifting Pin
6	Brake Release Lever
7	Spring Washer
8	Nut
9	Brake Lining
10	Hub
11	Retaining Ring
12	Fan Cover
13	Fan Set Screw
14	Fan
15	Brake Shoe
16	Armature Plate
17	Pressure Spring
18	Solenoid Coil
19	Fan Side Motor Bearing
20	Motor Shaft
21	Bearing Cover

B. Type CMB-20

Fig. E-36

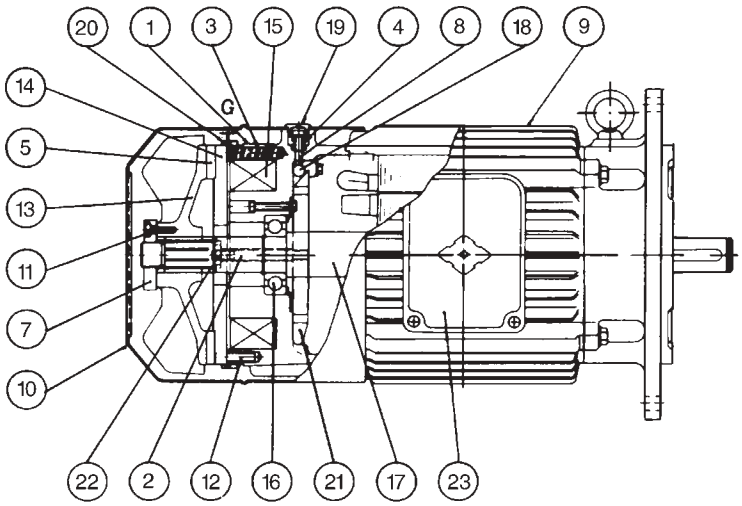

Table E-45. Type CMB-20

Part No.	Description
1	Stationary Core
2	Restraining Bolt
3	Pressure Spring
4	Auxiliary Spring
5	Brake Lining
7	Restraining Nut
8	Adjusting Bolt (Not Supplied)
9	Motor
10	Brake Cover
11	Bolt
12	Pin
13	Brake Wheel
14	Armature Plate
15	Solenoid Coil
16	Bearing
17	Motor Shaft
18	Roller
19	Plug
20	Dust Proof Seal
21	Shifting Plate
22	Nut
23	Conduit Box

D. Rectifier Data

Table E-46. Rectifier Data

Brake Type	Motor (HP X P)	Voltage (V)	Rectifier P.N. Single Voltage[1]	Product I.D. Number
FB-01A	1/8 X 4	190 ~ 230 380 ~ 460	25FW - 4FB	DX527WW-01
FB-02A	1/4 X 4 1/3 X 4	190 ~ 230 380 ~ 460	25FW - 4FB	DX527WW-01
FB-05A	1/2 X 4	190 ~ 230 380 ~ 460	25FW - 4FB	DX527WW-01
FB-1B	3/4 X 4 1 X 4	190 ~ 230 380 ~ 460	25FW - 4FB	DX527WW-01
FB-2B	1.5 X 4 1 X 4	190 ~ 230 380 ~ 460	25FW - 4FB	DX527WW-01
FB-3B	3 X 4	190 ~ 230 380 ~ 460	25FW - 4FB	DX527WW-01
FB-5B	5 X 4	190 ~ 230 380 ~ 460	25FW - 4FB	DX527WW-01
FB-8B	7.5 X 4	190 ~ 230 380 ~ 460	25FW - 4FB	DX527WW-01
FB-10B	10 X 4	190 ~ 230 380 ~ 460	25FW - 4FB	DX527WW-01
FB-15B	15 X 4	190 ~ 230 380 ~ 460	25FW - 4FB	DX527WW-01
CMB-20	20 X 4	180 ~ 460	SB25F-3HS	DN937WW-G01

Note: [1] Dual Voltage P.N. 25FW-4FB is now standard for all FB brakes. The voltage range is 190 ~ 460 V.

NOTES

Standards

- International Standards & Sumitomo Standards
- EC Directives & CE Markings
- Frequency & Voltage Standards Around the World

INTERNATIONAL STANDARDS AND CORRESPONDING SUMITOMO STANDARDS

UL Standards (Underwriters Laboratories)

UL Standards, which are based on a series of scientific studies, research and experiments, are established for safety by a commercial testing institute in the U.S. to prevent fire, disaster and harm to human life. They are not regulated to comply with U.S. Federal Government standards, but they are regulated by some U.S. cities and states.

Table E-47.

Motor	Non-explosion proof single-phase induction motor[1]	Non-explosion proof 3-phase induction motor	3-phase induction motor with brake
Power	1/8~1HPx4P	1/8~60HPx4P	1/8~7.5HPx4P
Voltage	115V, C230V	208V, 230V, 460V, 575V	
Frequency	60Hz	60Hz	
Insulation	Class A	Class A (Class B, Class F)[3]	Class F
Ambient Conditions	Indoor type[2]		

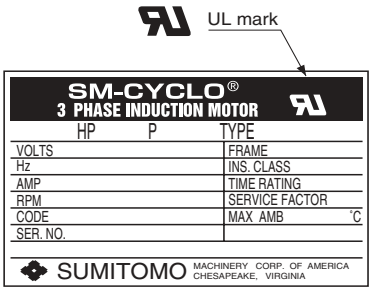

Fig. E-37 UL nameplate

Differences from Sumitomo Machinery Corporation of America (SMA) standard models:
- Numbered motor leads
- Nameplate with UL mark
- Large volume terminal box
- UL recognized insulation system.

Additional Remarks:
- Manufacturing and repair work may be conducted only at an authorized facility.

CSA Standards (Canadian Standards Association)

CSA Standards are standards that have been established by a semi-governmental organization in Canada. Most areas in Canada require electronic products to be approved by CSA.

Table E-48.

Motor	Single phase induction motor[1]	3-phase induction motor	3-phase induction motor with brake	High efficiency 3-phase induction motor	High efficiency 3-phase induction motor with brake
Power	1/8~1HPx4P	1/8~1HPx4P	1/8~1HPx4P	2~50HPx4P	2~50HPx4P
Voltage	115V, A230V	208V, 230V, 460V, 575V			
Frequency	60Hz				
Insulation	Class B and Class F[3]				
Ambient conditions	Indoor type[2]				

Differences from SMA standard models:
- Numbered motor leads
- Oversized frame for a high-efficiency motor
- Nameplate with CSA mark
- Large volume terminal box
- CSA standard motor coil.

Additional Remarks:
- If the unit is to be exported to Canada, it should include a CSA approved motor.
- Manufacturing and repair work may only be done at authorized facilities.
- Inverter (AF) motors are excluded from UL approval. Sumitomo supplies CSA compliant AF motors (CSA mark is not fixed on the nameplates of CSA compliant products).

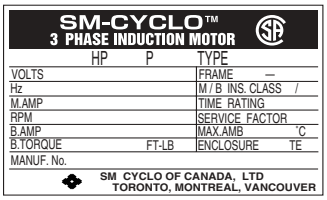

Fig. E-38 CSA nameplate

NRCan established the Energy Efficiency Act (EEACT) in 1992 and the Energy Efficiency Regulations (EER) in 1995. Additional regulations were applied to gearmotors imported on November 27, 1999 or later. The import of gearmotors that do not meet the efficiency standards has been banned.

NOTES: [1] Contact factory for manufacturers of single-phase motors or brakemotors.
[2] The outdoor type is unavailable.
[3] Contact the factory for manufacture of insulation types B or F.

NEMA Standards (National Electrical Manufacturers Association)

Established by a manufacturers' association to provide manufacturer and consumer standards for most electrical products.

Differences from Sumitomo Machinery Corporation of America standard models:
- Numbered motor leads
- Nameplate marked with NEMA design
- NEMA standard motor coil.

Additional Remarks:
- No approval is required to state NEMA compliance.
- NEMA standards also apply to inverter motor (AF).

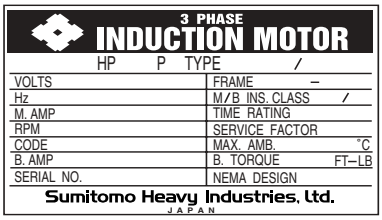

Fig. E-39 NEMA nameplate

Other Standards

Table E-49. Application of International Standards (Example)

Country/Standards	Japan•JIS JEM JEC	International•IEC	UK•BS	Germany•VDE DIN
Standard output	○	○	△ : 4kW max. ○ : 5.5kW min.	△ : 4kW max. ○ : 5.5kW min.
Applicable output frame size	○	–	△	△
Motor mounting dimension of corresponding frame size	○[1]	○[1]	○[1]	○[1]
Shaft end dimension	○[1]	○[1]	△[1]	△[1]
Dimension tolerance of shaft end key and key groove	○[1]	○[1]	△[1]	△[1]
Insulation class	○	○	○	–
Lead wire code	○	○	○	○
Standard direction of rotation	○	△	△	△
Description on nameplate	○	△	△	△
Characteristic testing method	○	○	△	△
Standard voltage	200V • 220V 400V • 440V	△	415V	220V 380V
Standard frequency	50Hz • 60Hz	50Hz • 60Hz	50Hz	50Hz

Note: [1] Denotes dimension of standard flange-mount CYCLO DRIVE. Consult the factory for flange dimensions required for standards.

○ : Sumitomo standards
△ : Manufactured to special specification on customer's request

IEC–International Electrotechnical Commission.
BS–British Standards.

EC DIRECTIVES AND CE MARKING

The CE mark is affixed to products that conform to EC directives in order to certify the quality and safety of products and ensure free distribution of products across borders within the region of the EU (European Union).

EC Directives Applicable to Machine Products and Implementation Period

Table E-50. Directives that Apply to Ordinary Machine Products

EC directives \ Details	Objects	Details of directive
Machinery Directive Machinery Directive	Aggregates of parts, which are movable (Industrial machines, primarily)	Essential matters related to safety of machines are stipulated. Machines that are electrically dangerous must meet the requirements for low voltage.
Low Voltage Directive Low Voltage Directive	Products driven by power of 50-1,000 VAC or 75-15,000 VDC	Products not conforming to standards cannot be put on the market.
EMC Directives Electromagnetic Compatibility Directive Electromagnetic	All types of products that may cause jamming (electromagnetic radiation) or have their functions impeded by nearby radio waves	EMI : Not to cause external electromagnetic interference EMS : To withstand external electromagnetic interference

Table E-51. Transition Period and Time Limit for Enforcement of CE Marking for Major Directives

EC Directive \ Year	1990	1991	1992	1993	1994	1995	1996	1997	1998	1999	2000	2001	2002	2003
Machinery Directive 89/392/EEC Original 91/368/EEC Revision I 93/44/EEC Revision II				1/1 Transition		1/1				Enforcement				
EMC Directives 89/336/EEC Original 92/31/EEC Revision I			1/1 Transition				1/1			Enforcement				
Low Voltage Directive 73/23/EEC Original 93/68/EEC Revision I						1/1 Transition		1/1		Enforcement				

Measures to Take for EC Directives and CE Marking Related to Gearmotors

Among EC directives, the machinery directive (issued in January 1995) concerning induction motors and low voltage directive (issued in January 1997) are applicable.

The EMC directive (issued in January 1996) does not apply to induction motors.

CE marking logo shown on nameplates

CE

Standard Specifications for CE Marking Motors

Input power	:	0.1kW~4kW 230/400V 50Hz Dual voltage direct starting 5.5kW or more 400V 50Hz 人–△ Start
Insulation	:	0.1kW~0.4kW Class E 0.75kW or more Class B
Rated time	:	Continuous
Characteristics	:	IEC34-1
Protection	:	IP54 (without brake), IP44 (with brake)
Terminal box	:	(Material) 5.5kW or less: Aluminum (PG16 boltsx2pcs) 7.5kW or more: cast iron (PG21 boltsx3pcs) (specification) Terminal plate (six terminals European style) with grounding terminal Conduit tube in European size (*PG bolts) *different from Japanese standard of conduit tube PF bolts.
Insulation	:	Distances between insulated surfaces and spaces in accordance with IEC standards.
External dimensions	:	Same as standard except for the terminal box
TEUV test report	:	Acquired for a representative model 0.75kWx4p, 230V/400V (Oct 1996) CE marking motors are manufactured in accordance with the model.
Declaration of Conformity	:	Declaration of Conformity is available when necessary for CE marking

Fig. E-40 Example of Terminal Box – 5.5 kW or less

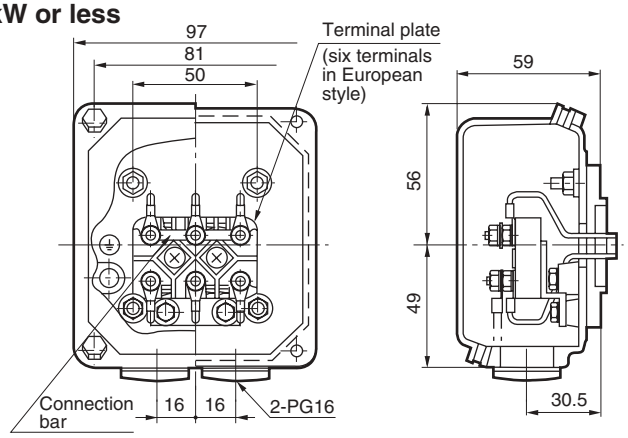

Manufacturing Range of CE Marking Motors

Table E-52. 3-phase induction motor

	230/400V dual voltage															400V		
Input Power Symbol	01	012	018	02	03	04	05	08	1	1H	2	3	4	5	6	8	10	15
kWx4P	(0.1)	0.12	0.18	(0.2)	0.25	0.37	(0.4)	0.55	0.75	1.1	1.5	2.2	3	(3.7)	4	5.5	7.5	11
Frame	F63S		F63M			F71M		F80S	F80M	F90S	F90L	F100L	F112S	F112M		F132S	F132M	F160M

- Motors with kWs not shown in parentheses ( ) in the above table are standard in Europe, while motors with kWs shown in parentheses ( ) are used only in Japan and other countries.
- European standard kW motors are recommended. Motors with kWs shown in parentheses ( ) are also available

  3-Phase 100V/50Hz, 200V/60Hz, 220V/60Hz
  3-Phase 400V/50Hz, 400V/60Hz, 440V/60Hz
  3-Phase 380V/50Hz
  3-Phase 415V/50Hz

Contact the factory when motors with kW and voltage not listed in Table E-51 are required.

WORLD FREQUENCY AND VOLTAGE SPECIFICATIONS

Table E-53.

Country / Area		Frequency	Voltage
	Japan	50Hz/60Hz	Single phase 100V/200V, 3-phase 200V
North America	America	60Hz	Single phase 115V/230V, 3-phase 230V/460V
	Canada	60Hz	Single phase 120V/347V, 3-phase 230V/460V/575V
Asia	Korea	60Hz	Single phase 110V/220V, 3-phase 220V/380V
	Taiwan	60Hz	Single phase 110V/220V, 3-phase 200V/220V/380V
	Hong Kong	50Hz	Single phase 200V/220V, 3-phase 346V/380V
	China	50Hz	Single phase 220V, 3-phase 220V/380V
	Philippines	60Hz	Single phase 220V, 3-phase 380V
	Thailand	50Hz	Single phase 220V, 3-phase 220V/380V
	Singapore	50Hz	Single phase 230V, 3-phase 415V
	Malaysia	50Hz	Single phase 240V, 3-phase 415V
	Indonesia	50Hz	Single phase 220V, 3-phase 380V
	India	50Hz	Single phase 40V, 3-phase 240V/415V
	Bangladesh	50Hz	Single phase 230V, 3-phase 400V
Oceania	Australia	50Hz	Single phase 240V, 3-phase 415V
	Guam	60Hz	Single phase 120V, 3-phase 240V/480V
	New Zealand	50Hz	Single phase 230V, 3-phase 230V/415V
Europe	Austria	50Hz	Single phase 230V, 3-phase 400V
	Belgium	50Hz	Single phase 230V, 3-phase 400V
	Bulgaria	50Hz	Single phase 220V, 3-phase 380V
	Denmark	50Hz	Single phase 230V, 3-phase 400V
	Finland	50Hz	Single phase 230V, 3-phase 400V
	France	50Hz	Single phase 230V, 3-phase 400V
	Germany	50Hz	Single phase 230V, 3-phase 400V
	Greece	50Hz	Single phase 230V, 3-phase 400V
	Hungary	50Hz	Single phase 220V, 3-phase 380V
	Italy	50Hz	Single phase 220V, 3-phase 380V
	Luxembourg	50Hz	Single phase 230V, 3-phase 400V
	Netherlands	50Hz	Single phase 230V, 3-phase 400V
	Norway	50Hz	Single phase 220V/230V, 3-phase 380V
	Poland	50Hz	Single phase 220V, 3-phase 380V
	Portugal	50Hz	Single phase 230V, 3-phase 400V/480V
	Romania	50Hz	Single phase 220V, 3-phase 380V
	Spain	50Hz	Single phase 127V/220V, 3-phase 220V/380V
	Sweden	50Hz	Single phase 230V/400V, 3-phase 400V/690V
	Switzerland	50Hz	Single phase 230V, 3-phase 400V
	United Kingdom	50Hz	Single phase 230V, 3-phase 400V

• Table E-53 lists the voltages primarily used in the country/area; voltages may differ within any given country/area.
• 120V is usual in the U.S.A and Canada even though the standard for single-phase is 115V.

General Engineering Information

- **Basic Power Transmission Formulas**
- **Derivations of Common Power Transmission Formulas**
- **Conversion Factors**

POWER TRANSMISSION FORMULAS

Basic Mechanics

Basic Torque Formula	
$T = F \cdot r$	T = Torque (inch•pounds) F = Force (pounds) r = Radius (inches)

Horsepower (when Torque and Speed is known)	
$HP = \frac{T \cdot N}{63025}$	HP = Horsepower T = Torque (inch•pounds) N = Rotational Speed (RPM)

Torque (when Horsepower and Speed is known)	
$T = \frac{HP \cdot 63025}{N}$	T = Torque (inch•pounds) HP = Horsepower N = Rotational Speed (RPM)

Speed (Rotary to Linear)	
$V = 0.262 \cdot N \cdot D$	V = Linear Velocity (ft/min) N = Rotational Speed (RPM) D = Diameter (inch)

Speed (Linear to Rotary)	
$N = \frac{V}{0.262 \cdot D}$	N = Rotational Speed (RPM) V = Linear Velocity (ft/min) D = Diameter (inch)

Torque to Accelerate Inertia	
$T_A = \frac{WK^2 \cdot \Delta N}{3696 \cdot t}$	T_{A2} = Torque (inch•pounds) WK^2 = Inertia (pound•inch^2) ΔN = Speed Change (RPM) t = Time (seconds

Conveyors

Continuous Torque	
$T_C = W(\sin\theta + f \cos\theta)\, r$	T_C = Continuous Torque (in•lbs) W = Weight (pounds) θ = Incline Angle (degrees) f = Friction Coefficient r = Radius (inch)

Load Inertia at Pulley	
$WK^2_L = w \cdot r^2$	WK^2_L = Load Inertia (lb•in^2) W = Weight (pounds) r = Radius (inch)

Total Inertia to Accelerate	
$WK^2_L = WK^2_L + WK^2_D + WK^2_M$	WK^2_T = Total Inertia (lb•in^2) WK^2_L = Load Inertia (lb•in^2) WK^2_D = Drive Inertia (lb•in^2) WK^2_M = Motor Inertia (lb•in^2)

Motor Torque Required	
$T_M = \frac{T_C + T_A}{1.5 \cdot R_R \cdot e}$ $T_M \geq \frac{T_C}{R_R \cdot e}$	T_M = Motor Torque (in•lb) T_C = Continuous Torque (in•lb) T_A = Acceleration Torque (in•lb) R_R = Reduction Ratio e = Reducer Efficiency

Overhung Load	
$OHL = \frac{T \cdot K}{r}$	OHL = Overhung Load (pounds) T = Torque (inch•pounds) K = OHL Factor r = Radius (inch)

Solid Cylinder (Pulley) Inertia	
$WK^2 = \frac{1}{2} \cdot w \cdot r2$	WK^2 = Load Inertia (lb•in^2) W = Weight (pounds) r = Radius

Hollow Cylinder Pulley Inertia	
$WK^2 = \frac{w \cdot (r_1^2 + r_2^2)}{2}$	WK^2 = Inertia (pound•inch^2) W = Weight (pounds) r^2_1 = Radius (inch) r^2_2 = Radius (inch)

Friction Coefficient (f)	
Belt/Rollers =	0.025
Fabric/Steel =	0.27
Plastic/Steel =	0.35
Rubber/Steel =	0.50
Leather/Steel =	0.56

OHL K-Factors	
Chain =	1.0
Polychain =	1.25
Pinion Gear =	1.25
V - Velt =	1.5
Flat Belt =	2.5

Electrical[1]

Current (when Horsepower is known)	
$I = \frac{HP \cdot 746}{1.73 \cdot E \cdot e \cdot pf}$	I = Current (A) HP = Power (HP) E = Voltage (v) e = Efficiency pf = Power Factor

Kilowatts	
$kW = \frac{1.73 \cdot I \cdot E \cdot pf}{1000}$	kW = Power (kW) I = Current (A) E = Voltage (v) pf = Power Factor

Current (when kilowatts are known)	
$I = \frac{kW \cdot 1000}{1.73 \cdot E \cdot pf}$	I = Current (A) kW = Power (kW) E = Voltage (v) pf = Power Factor

Current (when kilowatts are known)	
$HP = \frac{1.73 \cdot I \cdot E \cdot e \cdot pf}{746}$	HP = Power (HP) kW = Current (A) E = Voltage (v) e = Efficiency pf = Power Factor

Current (when kilovolt-amperes are known)	
$I = \frac{Kva \cdot 1000}{1.73 \cdot E}$	I = Current (A) Kva = Kilovolt-Amperes E = Voltage (v)

Reducer Effect (Cyclo, Gear, Belt, or Chain Drive)

Speed	
$N_M = N_L \cdot R_R$	N = Rotational Speed (RPM) R_R = Reuction Ratio M = Motor L = Load

Torque	
$T_M = \frac{TL}{e \cdot R_R}$	T = Torque (inch•pounds) e = Reducer Efficiency R_R = Reduction Ratio L = Load

Inertia	
$WK_M^2 = \frac{WK_L^2}{e \cdot R_R^2}$	WK^2 = Inertia (pound•inch^2) e = Reducer Efficiency R_R = Reduction Ratio M = Motor L = Load

COMMON RULES OF THUMB (APPROXIMATION):

At 1750 RPM, a motor develops 36 inch•pounds of torque per horsepower under full motor load conditions.

At 1165 RPM, a motor develops 54 inch•pounds of torque per horsepower under full motor load conditions.

At 575 volts, a 3-phase motor draws 1 amp per horsepower under full motor load condition.

At 460 volts, 3-phase motor draws 1.25 amps per horsepower under full motor load condition.

At 230 volts, a 3-phase motor draws 2.5 amps per horsepower under full motor load condition.

Note: [1] All electrical formulas apply to Alternating Current, 3 phase motors only.

FORMULA DERIVATIONS

Velocity

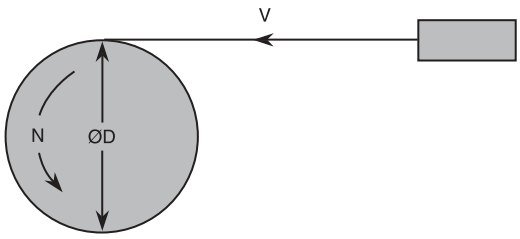

ØD = Wheel Diameter = 2 • R (ft, m)

R = Wheel Radius (ft, m)

N = Rotational Speed (RPM)

π = 3.1416

$$V = \frac{\pi \bullet 2 \bullet R \bullet N}{12} = 0.5236 \bullet R \bullet N \text{ (ft/min)}$$

$$V = \pi \bullet OD \bullet \frac{N}{60} \text{ (m/s)}$$

Torque

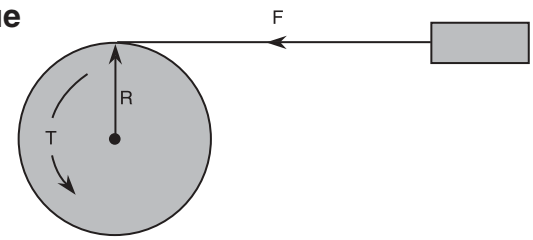

R = Wheel Radius (in, m)

F = Load (lbs, N)

T = Torque = F • R (in•lbs, N•m)

Power

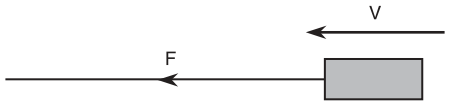

F = Loads (lbs, N)

V = Velocity (ft/min, m/s)

$$HP = \frac{F \bullet V}{33000}$$

$$kW = \frac{F \bullet V}{1000}$$

Power & Torque

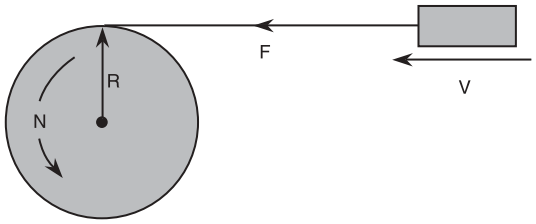

English	Metric
$HP = \frac{F \bullet V}{33000}$	$kW = \frac{F \bullet V}{1000}$
$= \frac{F \bullet (0.5236 \bullet R \bullet N)}{33000}$ ⇒ substitute 0.5236 • R • N for V	$= \frac{2 \bullet \pi}{1000 \bullet 60} \bullet N \bullet F \bullet R$ ⇒ substitute $\pi \bullet 2 \bullet R \bullet \frac{N}{60}$ for V
$= \frac{F \bullet R \bullet N}{63025}$	$= \frac{N \bullet F \bullet R}{9550}$
$= \frac{T \bullet N}{63025}$ ⇒ substitute T for F • R	$= \frac{T \bullet N}{9550}$ ⇒ substitute T for F • R
$T = \frac{HP \bullet 63025}{N}$	$T = \frac{kW \bullet N}{9550}$

Power & Torque

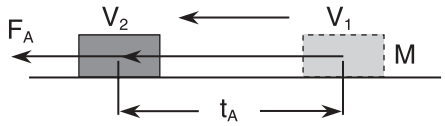

$$FA = M \bullet a$$

$$= M \bullet \frac{V2 - V1}{tA}$$

$$\therefore a = \frac{V2 - V1}{tA}$$

FA = Acceleration Force (lbs, N)

V = Velocity (ft/sec, m/sec)

tA = Acceleration Time (sec)

M = Mass (slug, kg)

a = Acceleration (ft/sec^2, m/sec^2)

COMMON CONVERSION FACTORS

Length

		m	dm	cm	mm
1m	=	1	10	100	1000
1 dm	=	0.1	1	10	100
1 cm	=	0.01	0.1	1	10
1 mm	=	0.001	0.01	0.1	1
1 yd	=	0.9144	9.144	91.44	914.4
1 ft	=	0.3048	3.048	30.48	304.8
1 in.	=	$25.4X10^{-3}$	0.2540	2.540	25.40
1 mil	=	$25.4X10^{-6}$	$254X10^{-6}$	$25.4X10^{-3}$	$25.4X10^{-3}$

		yd	ft	in	mil
1 m	=	1.094	3.281	39.370	$39.4X10^{3}$
1 dm	=	0.1094	0.3281	3.937	3937
1 cm	=	$10.9X10^{-3}$	$32.8X10^{-3}$	0.3937	393.7
1mm	=	$1.09X10^{-3}$	$3.28X10^{-3}$	$39.4X10^{-3}$	39.37
1 yd	=	1	3	36	$36X10^{3}$
1 ft	=	0.3333	1	12	$12X10^{3}$
1 in.	=	$27.8X10^{-3}$	$83.3X10^{-3}$	1	1000
1 mil	=	$27.8X10^{-6}$	$83.3X10^{-6}$	$1X10^{-3}$	1

1 mile (statute or British mile)	= 1760 yd	= 5280 ft = 1609.344 m	
1 n mile (nautical mile)	= 6080 ft	= 1.853 km	
1 km = 39370 in = 3281 ft	= 1093.6 yd	= 0.6214 mile	
		= 0.5396 n mile	
1 fathom	= 6 ft	= 1.8288 m	

Volume

		m^3	dm^3	cm^3	yd^3
$1m^3$	=	1	1000	$1X10^{6}$	1.3079
1 dm^3	=	$1X10^{-3}$	1	1000	$1.3X10^{-3}$
1 cm^3	=	$1X10^{-6}$	$1X10^{-3}$	1	$1.3X10^{-6}$
1 yd^3	=	0.765	764.6	$765X10^{3}$	1
1 ft^3	=	$28.3X10^{-3}$	28.32	$28.3X10^{3}$	$37X10^{-3}$
1 in^3	=	$16.4X10^{-6}$	$16.4X10^{-3}$	16.39	$21.4X10^{-6}$
1 gal (UK)	=	$4.55X10^{-3}$	4.546	4546	$5.95X10^{-3}$
1 gal (US)	=	$3.79X10^{-3}$	3.785	3785	$4.95X10^{-3}$

		yd^3	in^3	gal (UK)	gal (US)
1 m^3	=	35.32	$61.02X10^{3}$	220	264.2
1 dm^3	=	$35.3X10^{-3}$	61.02	0.22	0.2642
1 cm^3	=	$35.3X10^{-6}$	$61X10^{-3}$	$0.22X10^{-3}$	$0.26X10^{-3}$
1 yd^3	=	27	$46.7X10^{3}$	168.2	202
1 ft^3	=	1	1728	6.229	7.481
1 in^3	=	$579X10^{-6}$	1	$3.6X10^{-3}$	$4.3X10^{-3}$
1 gal (UK)	=	0.1605	277	1	1.201
1 gal (US)	=	0.1337	231	0.8327	1

1 bushel (UK)	=	8 gal (UK)	=	64 pt (UK)	=	36.371
1 bushel (US)	=	0.969 bu (UK)	=	35.24 l		
1 pint (UK)	=	1/8 gal (UK)	=	0.5682 l		
1 liq. pt. (US)	=	1/8 gal (US)	=	0.4732 l		
1 l	=	1.76 pt (UK)	=	2.113 liq. pt (US)		

Area

		m^2	dm^2	cm^2	mm^2
1 m^2	=	1	100	$10X10^{3}$	$1X10^{6}$
1 dm^2	=	0.01	1	100	$10X10^{3}$
1 cm^2	=	$0.1X10^{-3}$	0.01	1	100
1mm^2	=	$1X10^{-6}$	$0.1X10^{-3}$	0.01	1
1 yd^2	=	0.8361	83.61	8361	$836X10^{3}$
1 ft^2	=	$92.9X10^{-3}$	9.290	929.03	$92.9X10^{3}$
1 in^2	=	$0.645x10^{-3}$	$64.5X10^{-3}$	6.4516	645.16
1 CM	=	–	–	$5.07X10^{-6}$	$0.507X10^{-3}$

		yd^2	ft^2	in^2	CM
1 m^2	=	1.196	10.764	1550	–
1 dm^2	=	$12X10^{-3}$	0.1076	15.50	–
1 cm^2	=	$0.12X10^{-3}$	$1.08X10^{-3}$	0.1550	$197X10^{3}$
1 mm^2	=	$1.2X10^{-6}$	$10.8X10^{-6}$	$1.55X10^{-3}$	$1.97X10^{3}$
1 yd^2	=	1	9	1296	–
1 ft^2	=	0.1111	1	144	$183X10^{6}$
1 in^2	=	$772X10^{-6}$	$6.94X10^{-3}$	1	$1.27X10^{6}$
1 CM	=	–	$5.45X10^{-9}$	$0.785X10^{-6}$	1

1 square mile	=	640 acres	=	2.590 km^2	=	259 ha
1 acre	=	4840 yd^2	=	0.405 ha	=	4047 m^2
1 km^2	=	0.386 mi^2	=	100 ha	=	10000 a
1 ha	=	100 a	=	2.471 acres	=	11959.6 yd^2
1 a	=	100 m^2	=	119.6 yd^2	=	1076.4 ft^2

Force and Weight

		N	kP	P
1 N	=	1	0.1020	102.0
1 kp	=	9.807	1	1000
1 p	=	$9.81X10^{-3}$	$1X10^{-3}$	1
1 dyn	=	$1X10^{-5}$	$1.02X10^{-6}$	$1.02X10^{-3}$
1 tonf (UK)	=	9964	1016	$1.02X10^{6}$
1 lbf	=	4.448	0.4536	453.6
1 ozf	=		$28.4X10^{-3}$	28.35

		dyn	tonf (UK)	lbf	ozf
1 N	=	$1X10^{5}$	$100.4X10^{-6}$	0.2248	3.597
1 kP	=	$981x10^{3}$	$0.984X10^{-3}$	2.205	35.27
1 P	=	980.7	$0.984X10^{-6}$	$2.2X10^{-3}$	$35.3X10^{-3}$
1 dyn	=	1	$1X10^{-9}$	$2.25X10^{-6}$	$36X10^{-6}$
1 tonf (UK)	=	$996X10^{6}$	1	2240	$35.8X10^{3}$
1 lbf	=	$445X10^{3}$	$446X10^{-6}$	1	16
1 ozf	=	$27.8X10^{3}$	$27.9X10^{-6}$	$62.5X10^{-3}$	1

1 (long) ton (UK)	=	160 stones	=	2240 lb	=	1.016 t
1 (short) ton (US)	=	142.9 stones	=	2000 lb	=	0.907 t
1 stone	=	14 lb	=	224 oz	=	6.35 kg
1 ton	=	20 cwt				
1 cwt (UK)	=	4 quarters	=	8 stones	=	112 lb
1 cwt (US)	=	100 lb	=	45.36 kg		
1 t	=	1000 kg	=	0.984 ton (UK)	=	1.101 ton (US)

COMMON CONVERSION FACTORS

Velocity

		km/h	m/min	m/s
1 km/h	=	1	16.667	0.2778
1 m/min	=	0.06	1	$16.7X10^{-3}$
1 m/s	=	3.6	60	1
1 mile/h	=	1.609	26.82	0.4470
1 ft/min	=	$18.3X10^{-3}$	0.3048	$5.08X10^{-3}$
1 ft/s	=	1.097	18.288	0.3048
1 in/s	=	$91X10^{-3}$	1.524	$25.4X10^{-3}$

		mile/h	ft/min	ft/s	in/s
1 km/h	=	0.6214	54.68	0.9113	10.936
1 m/min	=	$37.3X10^{-3}$	3.281	$54.7x10^{-3}$	0.656
1 m/s	=	2.237	196.85	3.281	39.37
1 mile/h	=	1	88	1.467	17.6
1 ft/min	=	$11.4X10^{-3}$	1	$16.7X10^{-3}$	0.2
1 ft/s	=	0.6818	60	1	12
1 in/s	=	$56.8X10^{-3}$	5	$83.3X10^{-3}$	1

Torque

		Nm	cNm	kgfm
1 Nm	=	1	100	0.10197
1 cNm	=	0.01	1	$1.02X10^{-3}$
1 kgfm	=	9.8067	980.67	1
1 cpm	=	$98.1X10^{-6}$	$9.81X10^{-3}$	$10X10^{-6}$
1 lbf•ft	=	1.356	135.6	0.1383
1 lbf•in	=	0.1129	11.29	$11.5X10^{-3}$
1 ozf•in	=	$7.062X10^{-3}$	0.7062	$0.72X10^{-3}$

		cpm	lbf•ft	lbf•in	ozf•in
1 Nm	=	$10.2X10^{3}$	0.73756	8.8507	141.61
1 cNm	=	101.97	$7.376X10^{-3}$	$88.5X10^{-3}$	1.4161
1 kgfm	=	$100X10^{3}$	7.233	86.796	1389
1 cpm	=	1	$72.3X10^{-6}$	$868X10^{-6}$	$13.9X10^{-3}$
1 lbf•ft	=	$13.8X10^{3}$	1	12	192
1 lbf•in	=	1152	$83.3X10^{-3}$	1	16
1 ozf•in	=	72.01	$5.21X10^{-3}$	$62.5X10^{-3}$	1

Power

		kW	PS	hp
1 kW	=	1	1.360	1.341
1 PS	=	0.7355	1	0.9863
1 hp	=	0.7457	1.014	1
1 kgfm/s	=	$9.81X10^{-3}$	$13.33X10^{-3}$	$13.15X10^{-3}$
1 ft•lbf/s	=	$1.36X10^{-3}$	$1.84X10^{-3}$	$1.82X10^{-3}$
1 kcal/s	=	4.1868	5.692	5.615
1 Btu/s	=	1.055	1.435	1.415

		kgfm/s	ft•lbf/s	kcal/s	Btu/s
1 kW	=	102.0	737.6	0.2388	0.9478
1 PS	=	75	542.5	0.1757	0.6971
1 hp	=	76.04	550	0.1781	0.7068
1 kgfm/s	=	1	7.233	$2.342X10^{-3}$	$9.295X10^{-3}$
1 ft•lbf/s	=	0.1383	1	$0.324X10^{-3}$	$1.285X10^{-3}$
1 kcal/s	=	426.9	3088	1	3.968
1 Btu/s	=	107.6	778.2	0.2520	1

Moment of Inertia and Other Flywheel Effects

		kgm^2 *(mr^2)*	$kgfm^2$ *(GD^2)*
1 kgm^2 *(mr^2)*	≙	1	4
1 $kgfm^2$ *(GD^2)*	≙	0.25	1
1 lbf•ft^2 *(Wr^2)*	≙	$42.1X10^{-3}$	0.1686
1 $kpms^2$	≙	9.807	39.23
1 ft•lbf•s^2	≙	1.356	5.423

		lbf•ft^2 *(Wr^2)*	$kpms^2$	ft•lbf•s^2
1 kgm^2 *(mr^2)*	≙	23.73	0.102	0.7376
1 $kgfm^2$ *(GD^2)*	≙	5.933	$25.5X10^{-3}$	0.1844
1 lbf•ft^2 *(Wr^2)*	≙	1	$4.30X10^{-3}$	$31.1X10^{-3}$
1 $kpms^2$	≙	232.7	1	7.233
1 ft•lbf•s^2	≙	32.17	0.1383	1

Pressure and Stress

		N/m^2	bar	kgf/m^2
1 N/m^2	=	1	$1X10^{-5}$	0.102
1 bar	=	$1X10^{5}$	1	$10.2X10^{3}$
1 kgf/m^2	=	9.81	$98.1X10^{-6}$	1
1 kgf/cm^2	=	$98.1X10^{3}$	0.981	$10X10^{3}$
1 kgf/mm^2	=	$9.81X10^{6}$	98.1	$1X10^{6}$
1 lbf/yd^2	=	5.32	$53.2X10^{-6}$	0.543
1 lbf/ft^2	=	47.88	$479X10^{-6}$	4.882
1 lbf/in^2	=	$6.89X10^{3}$	$68.9X10^{-3}$	703
1 $tonf/in^2$	=	$15.4X10^{3}$	154	$1.58X10^{6}$

		kgf/cm^2	kgf/mm^2	lbf/yd^2
1 N/m^2	=	$10.2x10^{-6}$	$0.102x10^{-6}$	0.188
1 bar	=	1.02	$10.2X10^{-3}$	$18.8X10^{3}$
1 kgf/m^2	=	$0.1X10^{-3}$	$1X10^{-6}$	1.843
1 kgf/cm^2	=	1	0.01	$18.4X10^{3}$
1 kgf/mm^2	=	100	1	$1.84X10^{6}$
1 lbf/yd^2	=	$54X10^{-6}$	$0.54X10^{-6}$	1
1 lbf/ft^2	=	$0.488X10^{-3}$	$4.88X10^{-6}$	9
1 lbf/in^2	=	$70.3X10^{-3}$	$0.703X10^{-3}$	1296
1 $tonf/in^2$	=	157.5	1.575	$2.9X10^{6}$

		lbf/ft^2	lbf/in^2	$tonf/in^2$
1 N/m^2	=	$20.88X10^{-3}$	$145X10^{-6}$	$64.75X10^{-9}$
1 bar	=	$2.088X10^{3}$	14.5	$6.475X10^{-3}$
1 kgf/m^2	=	0.2048	$1.42X10^{-3}$	$0.64X10^{-6}$
1 kgf/cm^2	=	$2.05X10^{3}$	14.223	$6.4X10^{-3}$
1 kgf/mm^2	=	$205X10^{3}$	$1.422X10^{3}$	0.6349
1 lbf/yd^2	=	0.1111	$772X10^{-6}$	$0.345X10^{-6}$
1 lbf/ft^2	=	1	$6.94X10^{-3}$	$3.1X10^{-6}$
1 lbf/in^2	=	144	1	$0.446X10^{-3}$
1 $tonf/in^2$	=	$0.323X10^{6}$	2240	1